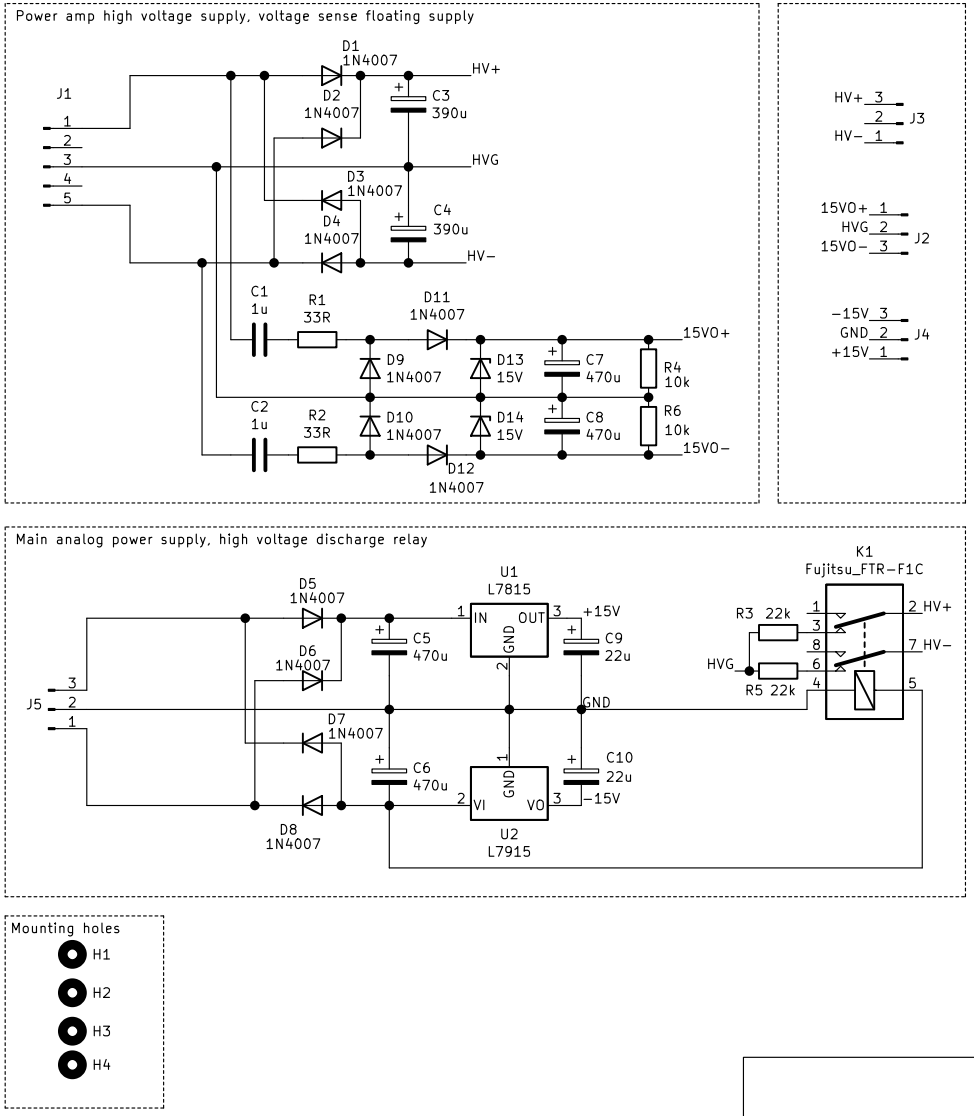

Sheet: /
File: smu_pwr_1.sch

Title: JSMU – power board P1

Size: A4	Date:	Rev:
KiCad E.D.A. kicad 5.1.10−88a1d61d5888ubuntu18.04.1		Id: 1/1