Power Supply and Management

File: pwr.kicad_sch

Bootstrap and Clocks

File: bootstrap.kicad_sch

Storage and RAM

File: memory.kicad_sch

Core IO

File: coreio.kicad_sch

more power supplys

File: more power.kicad_sch

Audio

File: audio.kicad_sch

BerryCore is the SoC and it's additional parts: power supply, PMIC and eMCP.
Other BerryFlight designs implement the core as a drop in with standardized BC_ net names.

BerryFlight (Daniel Heymann)

Sheet: /
File: core.kicad_sch

Title: BerryCore

Size: A4	Date: 2021-04-12	**Rev: 0.1**
KiCad E.D.A. kicad (5.99.0-10149-gb2f788adc1)		Id: 1/7

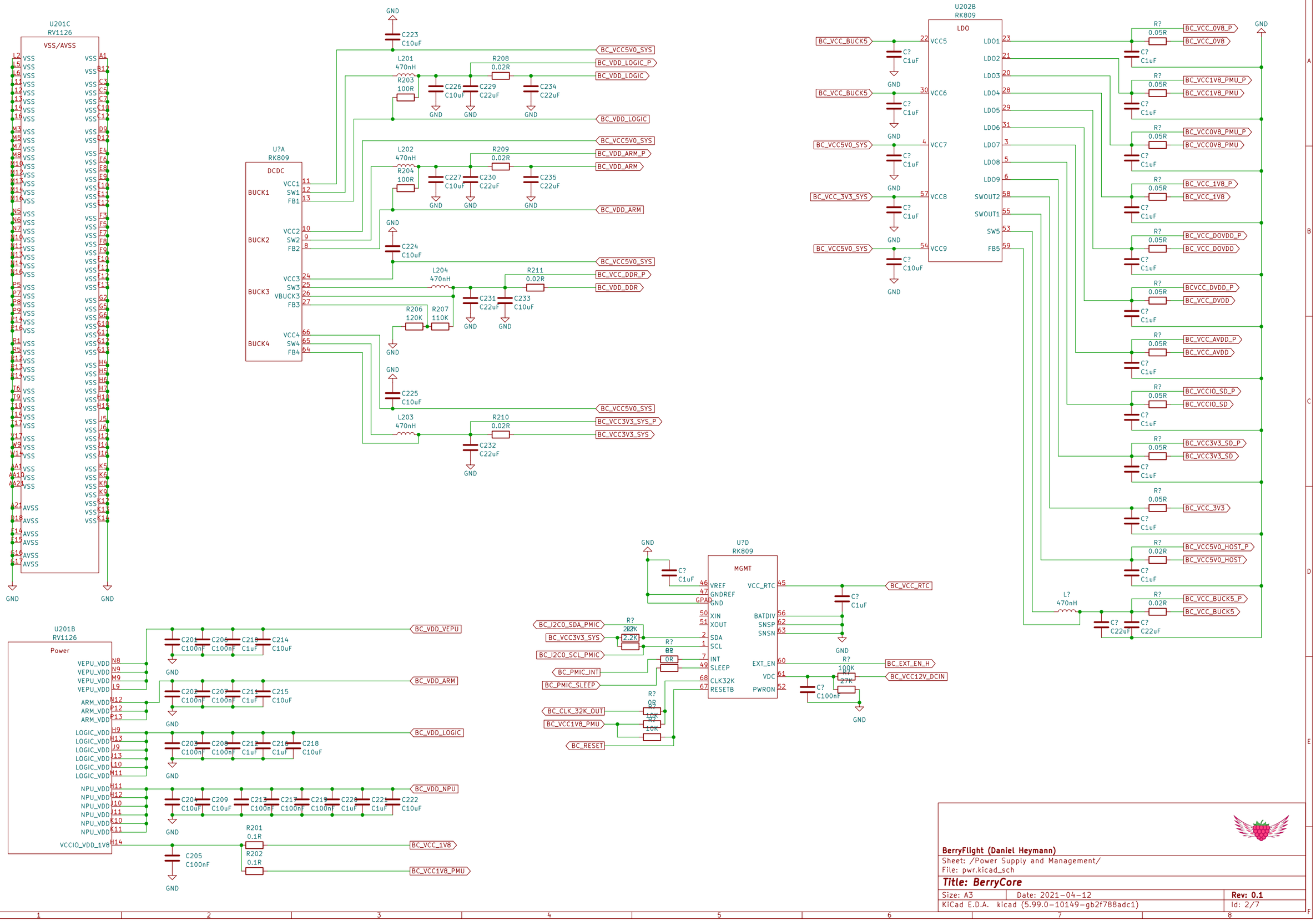
U201C
RV1126
VSS/AVSS
GND
U?A
RK809
DCDC
BUCK1
BUCK2
BUCK3
BUCK4
L201 470nH
L202 470nH
L203 470nH
L204 470nH
R203 100R
R204 100R
R206 120K
R207 110K
R208 0.02R
R209 0.02R
R210 0.02R
R211 0.02R
C223 C10uF
C224 C10uF
C225 C10uF
C226 C10uF
C227 C10uF
C229 C22uF
C230 C22uF
C231 C22uF
C232 C22uF
C233 C10uF
C234 C22uF
C235 C22uF
BC_VCC5V0_SYS
BC_VDD_LOGIC_P
BC_VDD_LOGIC
BC_VDD_ARM_P
BC_VDD_ARM
BC_VCC_DDR_P
BC_VDD_DDR
BC_VCC3V3_SYS_P
BC_VCC3V3_SYS
U202B
RK809
LDO
BC_VCC_BUCK5
BC_VCC5V0_SYS
BC_VCC_3V3_SYS
LDO1
LDO2
LDO3
LDO4
LDO5
LDO6
LDO7
LDO8
LDO9
SWOUT2
SWOUT1
SW5
FB5
BC_VCC_0V8_P
BC_VCC_0V8
BC_VCC1V8_PMU_P
BC_VCC1V8_PMU
BC_VCC0V8_PMU_P
BC_VCC0V8_PMU
BC_VCC_1V8_P
BC_VCC_1V8
BC_VCC_DOVDD_P
BC_VCC_DOVDD
BCVCC_DVDD_P
BC_VCC_DVDD
BC_VCC_AVDD_P
BC_VCC_AVDD
BC_VCCIO_SD_P
BC_VCCIO_SD
BC_VCC3V3_SD_P
BC_VCC3V3_SD
BC_VCC_3V3
BC_VCC5V0_HOST_P
BC_VCC5V0_HOST
BC_VCC_BUCK5_P
BC_VCC_BUCK5
L? 470nH
U201B
RV1126
Power
BC_VDD_VEPU
BC_VDD_ARM
BC_VDD_LOGIC
BC_VDD_NPU
BC_VCC_1V8
BC_VCC1V8_PMU
R201 0.1R
R202 0.1R
C205 C100nF
U?D
RK809
MGMT
BC_I2C0_SDA_PMIC
BC_I2C0_SCL_PMIC
BC_PMIC_INT
BC_PMIC_SLEEP
BC_CLK_32K_OUT
BC_RESET
BC_VCC_RTC
BC_EXT_EN_H
BC_VCC12V_DCIN
BerryFlight (Daniel Heymann)
Sheet: /Power Supply and Management/
File: pwr.kicad_sch
Title: BerryCore
Size: A3
Date: 2021-04-12
Rev: 0.1
KiCad E.D.A. kicad (5.99.0-10149-gb2f788adc1)
Id: 2/7

BerryFlight (Daniel Heymann)

Sheet: /Storage and RAM/
File: memory.kicad_sch

Title: BerryCore

Size: A3	Date: 2021-04-12	**Rev: 0.1**
KiCad E.D.A. kicad (5.99.0-10149-gb2f788adc1)		Id: 3/7

BerryFlight (Daniel Heymann)

Sheet: /Core IO/
File: coreio.kicad_sch

Title: BerryCore

Size: A3	Date: 2021-04-12	**Rev: 0.1**
KiCad E.D.A. kicad (5.99.0-10149-gb2f788adc1)		Id: 4/7

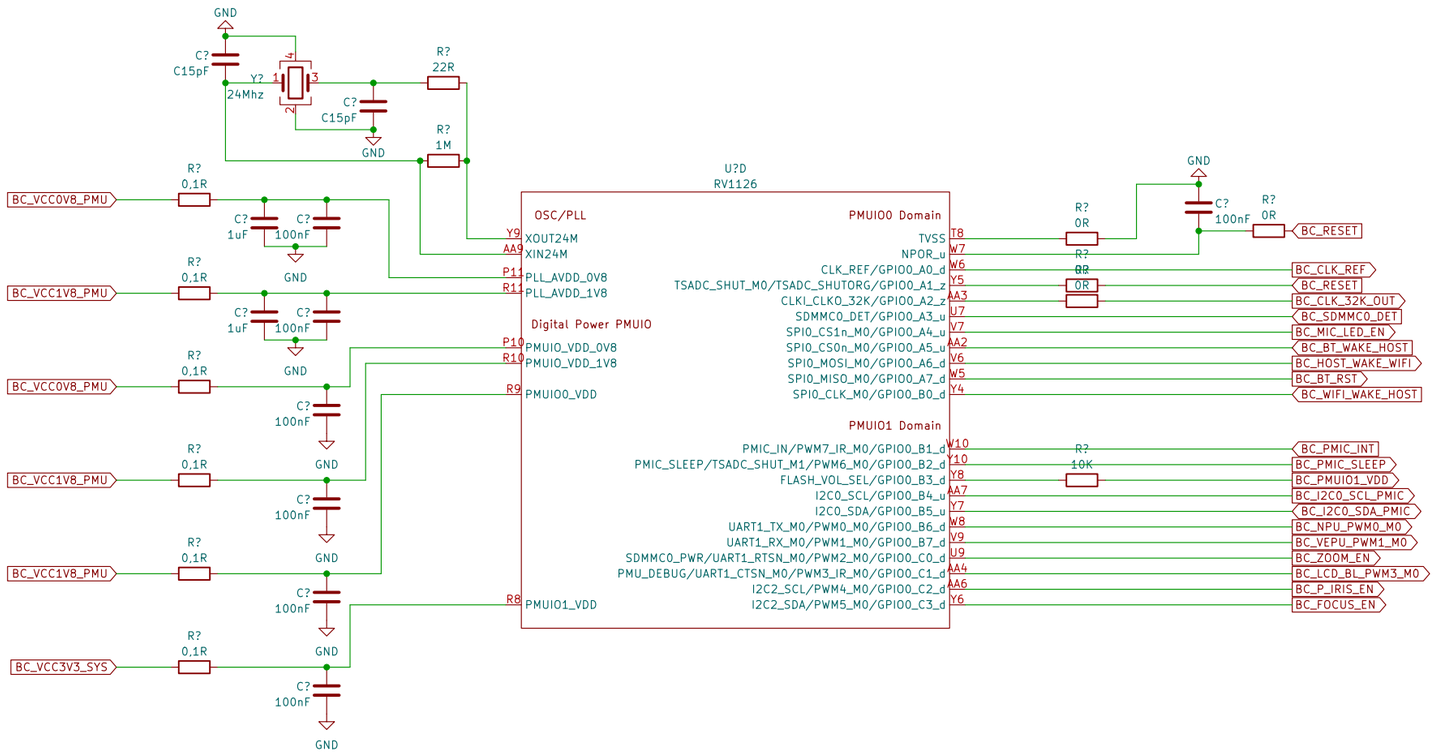

BerryFlight (Daniel Heymann)

Sheet: /Bootstrap and Clocks/
File: bootstrap.kicad_sch

Title: BerryCore

Size: A3	Date: 2021-04-12	**Rev: 0.1**
KiCad E.D.A. kicad (5.99.0-10149-gb2f788adc1)		Id: 5/7

BerryFlight (Daniel Heymann)

Sheet: /Audio/

File: audio.kicad_sch

Title: BerryCore

Size: A3	Date: 2021-04-12	**Rev: 0.1**
KiCad E.D.A. kicad (5.99.0-10149-gb2f788adc1)		Id: 6/7

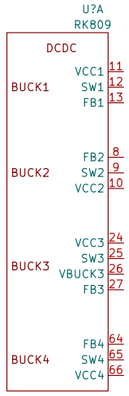

BerryFlight (Daniel Heymann)

Sheet: /more power supplys/
File: more power.kicad_sch

Title: BerryCore

Size: A3	Date: 2021-04-12	**Rev: 0.1**
KiCad E.D.A. kicad (5.99.0-10149-gb2f788adc1)		Id: 7/7