Power Supply and Management

File: pwr.kicad_sch

Bootstrap and Clocks

File: bootstrap.kicad_sch

Storage and RAM

File: memory.kicad_sch

Core IO

File: coreio.kicad_sch

more power supplys

File: more power.kicad_sch

Audio

File: audio.kicad_sch

BerryCore is the SoC and it's additional parts: power supply, PMIC and eMCP.
Other BerryFlight designs implement the core as a drop in with standardized BC_ net names.

BerryFlight (Daniel Heymann)

Sheet: /
File: core.kicad_sch

Title: BerryCore

Size: A4	Date: 2021-04-12	**Rev: 0.1**
KiCad E.D.A. kicad (5.99.0-10149-gb2f788adc1)		Id: 1/7

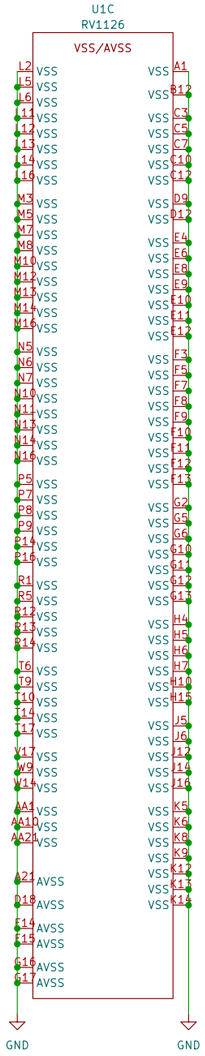

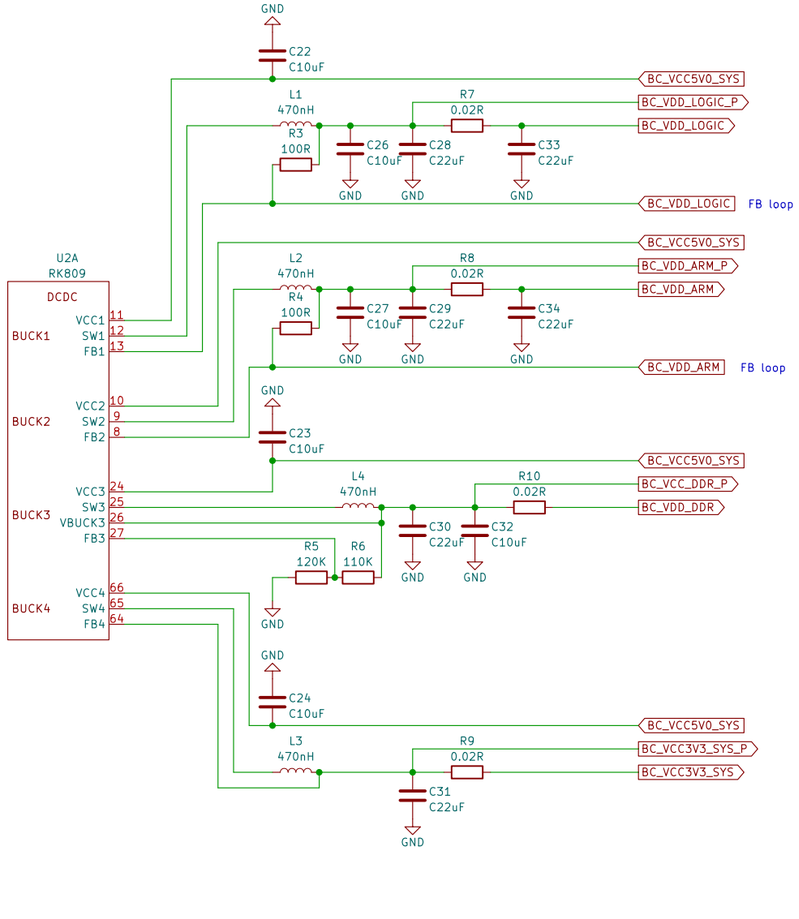

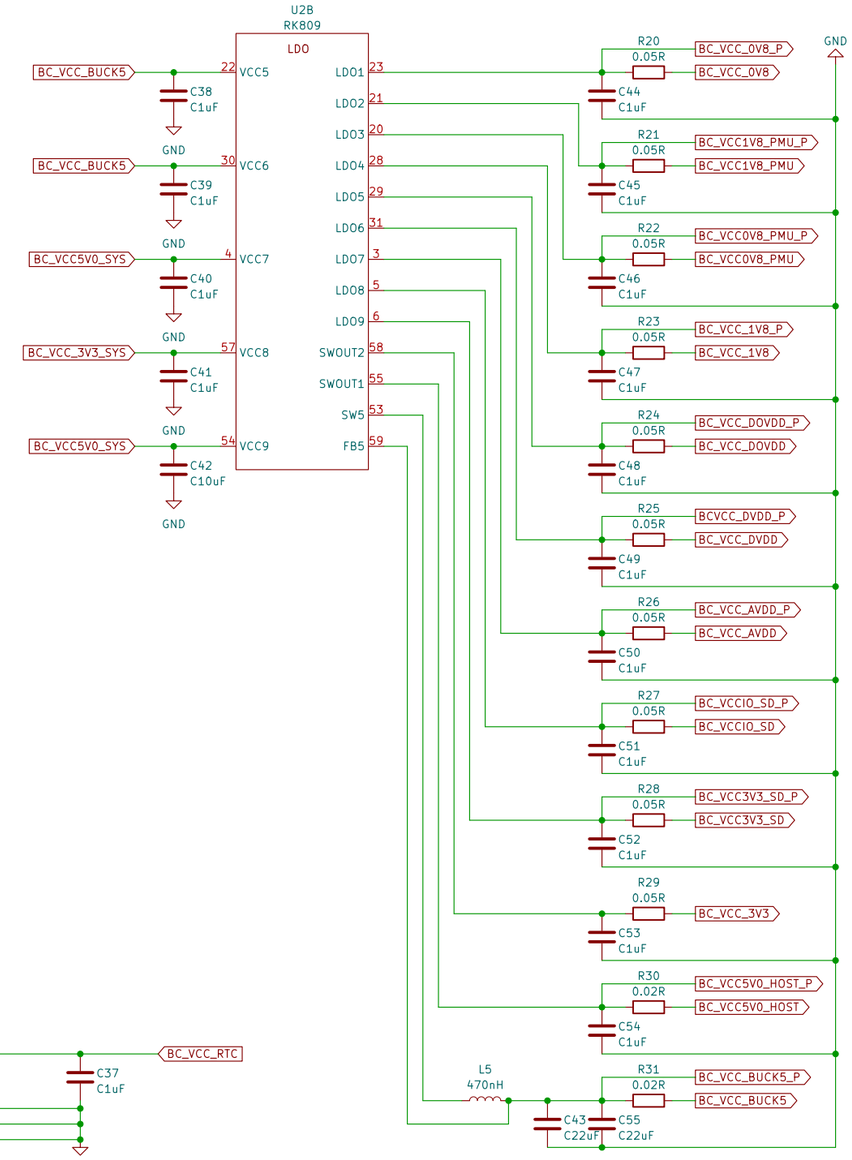

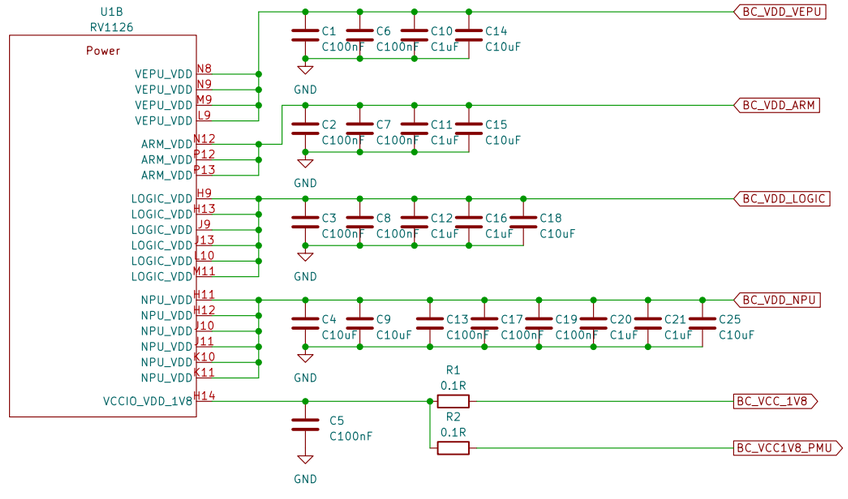

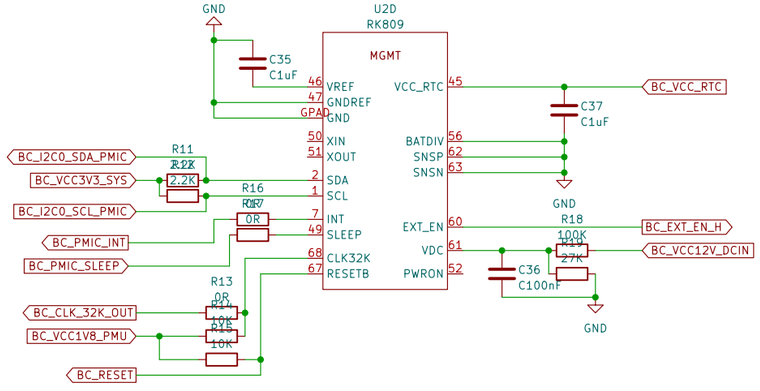

BerryFlight (Daniel Heymann)

Sheet: /Power Supply and Management/
File: pwr.kicad_sch

Title: BerryCore

Size: A3	Date: 2021-04-12	**Rev: 0.1**
KiCad E.D.A. kicad (5.99.0-10149-gb2f788adc1)		Id: 2/7

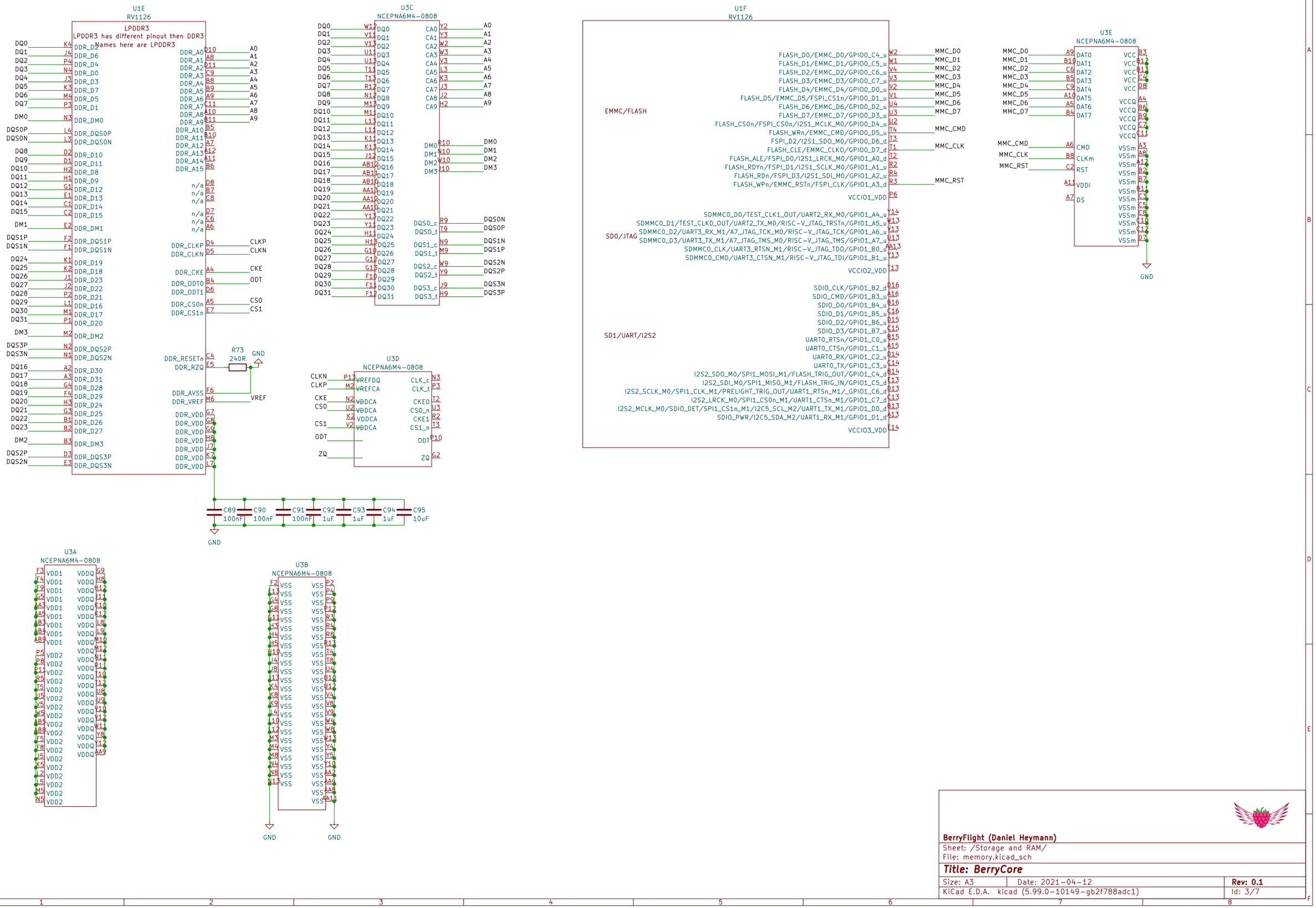
U1E
RV1126
LPDDR3
LPDDR3 has different pinout then DDR3
Names here are LPDDR3
DDR_D0
DDR_D6
DDR_D4
DDR_D0
DDR_D3
DDR_D7
DDR_D5
DDR_D1
DDR_DM0
DDR_DQS0P
DDR_DQS0N
DDR_D10
DDR_D11
DDR_D8
DDR_D9
DDR_D12
DDR_D13
DDR_D14
DDR_D15
DDR_DM1
DDR_DQS1P
DDR_DQS1N
DDR_D19
DDR_D18
DDR_D23
DDR_D22
DDR_D21
DDR_D16
DDR_D17
DDR_D20
DDR_DM2
DDR_DQS2P
DDR_DQS2N
DDR_D30
DDR_D31
DDR_D28
DDR_D29
DDR_D24
DDR_D25
DDR_D26
DDR_D27
DDR_DM3
DDR_DQS3P
DDR_DQS3N
DDR_A0
DDR_A1
DDR_A2
DDR_A3
DDR_A4
DDR_A5
DDR_A6
DDR_A7
DDR_A8
DDR_A9
DDR_A10
DDR_A11
DDR_A12
DDR_A13
DDR_A14
DDR_A15
DDR_CLKP
DDR_CLKN
DDR_CKE
DDR_ODT0
DDR_ODT1
DDR_CS0n
DDR_CS1n
DDR_RESETn
DDR_RZQ
DDR_AVSS
DDR_VREF
DDR_VDD
DDR_VDD
DDR_VDD
DDR_VDD
DDR_VDD
DDR_VDD
DDR_VDD
CLKP
CLKN
CKE
ODT
CS0
CS1
R73
240R
GND
VREF
U3C
NCEPNA6M4-0808
DQ0
DQ1
DQ2
DQ3
DQ4
DQ5
DQ6
DQ7
DQ8
DQ9
DQ10
DQ11
DQ12
DQ13
DQ14
DQ15
DQ16
DQ17
DQ18
DQ19
DQ20
DQ21
DQ22
DQ23
DQ24
DQ25
DQ26
DQ27
DQ28
DQ29
DQ30
DQ31
CA0
CA1
CA2
CA3
CA4
CA5
CA6
CA7
CA8
CA9
DM0
DM1
DM2
DM3
DQS0_c
DQS0_t
DQS1_c
DQS1_t
DQS2_c
DQS2_t
DQS3_c
DQS3_t
DQS0N
DQS0P
DQS1N
DQS1P
DQS2N
DQS2P
DQS3N
DQS3P
U3D
NCEPNA6M4-0808
CLKN
CLKP
CKE
CS0
CS1
ODT
ZQ
VREFDQ
VREFCA
VDDCA
VDDCA
VDDCA
VDDCA
CLK_c
CLK_t
CKE0
CS0_n
CKE1
CS1_n
ODT
ZQ
U1F
RV1126
EMMC/FLASH
SD0/JTAG
SD1/UART/I2S2
FLASH_D0/EMMC_D0/GPIO0_C4_u
FLASH_D1/EMMC_D1/GPIO0_C5_u
FLASH_D2/EMMC_D2/GPIO0_C6_u
FLASH_D3/EMMC_D3/GPIO0_C7_u
FLASH_D4/EMMC_D4/GPIO0_D0_u
FLASH_D5/EMMC_D5/FSPI_CS1n/GPIO0_D1_u
FLASH_D6/EMMC_D6/GPIO0_D2_u
FLASH_D7/EMMC_D7/GPIO0_D3_u
FLASH_CS0n/FSPI_CS0n/I2S1_MCLK_M0/GPIO0_D4_u
FLASH_WRn/EMMC_CMD/GPIO0_D5_u
FSPI_D2/I2S1_SDO_M0/GPIO0_D6_d
FLASH_CLE/EMMC_CLKO/GPIO0_D7_d
FLASH_ALE/FSPI_D0/I2S1_LRCK_M0/GPIO1_A0_d
FLASH_RDYn/FSPI_D1/I2S1_SCLK_M0/GPIO1_A1_u
FLASH_RDn/FSPI_D3/I2S1_SDI_M0/GPIO1_A2_u
FLASH_WPn/EMMC_RSTn/FSPI_CLK/GPIO1_A3_d
VCCIO1_VDD
SDMMC0_D0/TEST_CLK1_OUT/UART2_RX_M0/GPIO1_A4_u
SDMMC0_D1/TEST_CLK0_OUT/UART2_TX_M0/RISC-V_JTAG_TRSTn/GPIO1_A5_u
SDMMC0_D2/UART3_RX_M1/A7_JTAG_TCK_M0/RISC-V_JTAG_TCK/GPIO1_A6_u
SDMMC0_D3/UART3_TX_M1/A7_JTAG_TMS_M0/RISC-V_JTAG_TMS/GPIO1_A7_u
SDMMC0_CLK/UART3_RTSN_M1/RISC-V_JTAG_TDO/GPIO1_B0_u
SDMMC0_CMD/UART3_CTSN_M1/RISC-V_JTAG_TDI/GPIO1_B1_u
VCCIO2_VDD
SDIO_CLK/GPIO1_B2_d
SDIO_CMD/GPIO1_B3_u
SDIO_D0/GPIO1_B4_u
SDIO_D1/GPIO1_B5_u
SDIO_D2/GPIO1_B6_u
SDIO_D3/GPIO1_B7_u
UART0_RTSn/GPIO1_C0_u
UART0_CTSn/GPIO1_C1_u
UART0_RX/GPIO1_C2_u
UART0_TX/GPIO1_C3_u
I2S2_SDO_M0/SPI1_MOSI_M1/FLASH_TRIG_OUT/GPIO1_C4_d
I2S2_SDI_M0/SPI1_MISO_M1/FLASH_TRIG_IN/GPIO1_C5_d
I2S2_SCLK_M0/SPI1_CLK_M1/PRELIGHT_TRIG_OUT/UART1_RTSn_M1/_GPIO1_C6_d
I2S2_LRCK_M0/SPI1_CS0n_M1/UART1_CTSn_M1/GPIO1_C7_d
I2S2_MCLK_M0/SDIO_DET/SPI1_CS1n_M1/I2C5_SCL_M2/UART1_TX_M1/GPIO1_D0_d
SDIO_PWR/I2C5_SDA_M2/UART1_RX_M1/GPIO1_D1_d
VCCIO3_VDD
MMC_D0
MMC_D1
MMC_D2
MMC_D3
MMC_D4
MMC_D5
MMC_D6
MMC_D7
MMC_CMD
MMC_CLK
MMC_RST
U3E
NCEPNA6M4-0808
DAT0
DAT1
DAT2
DAT3
DAT4
DAT5
DAT6
DAT7
CMD
CLKm
RST
VDDI
DS
VCC
VCCQ
VSSm
GND
C89
100nF
C90
100nF
C91
100nF
C92
1uF
C93
1uF
C94
1uF
C95
10uF
U3A
NCEPNA6M4-0808
VDD1
VDD2
VDDQ
U3B
NCEPNA6M4-0808
VSS
BerryFlight (Daniel Heymann)
Sheet: /Storage and RAM/
File: memory.kicad_sch
Title: BerryCore
Size: A3
Date: 2021-04-12
Rev: 0.1
KiCad E.D.A. kicad (5.99.0-10149-gb2f788adc1)
Id: 3/7

BerryFlight (Daniel Heymann)

Sheet: /Core IO/
File: coreio.kicad_sch

Title: BerryCore

Size: A3	Date: 2021-04-12	**Rev: 0.1**
KiCad E.D.A. kicad (5.99.0-10149-gb2f788adc1)		Id: 4/7

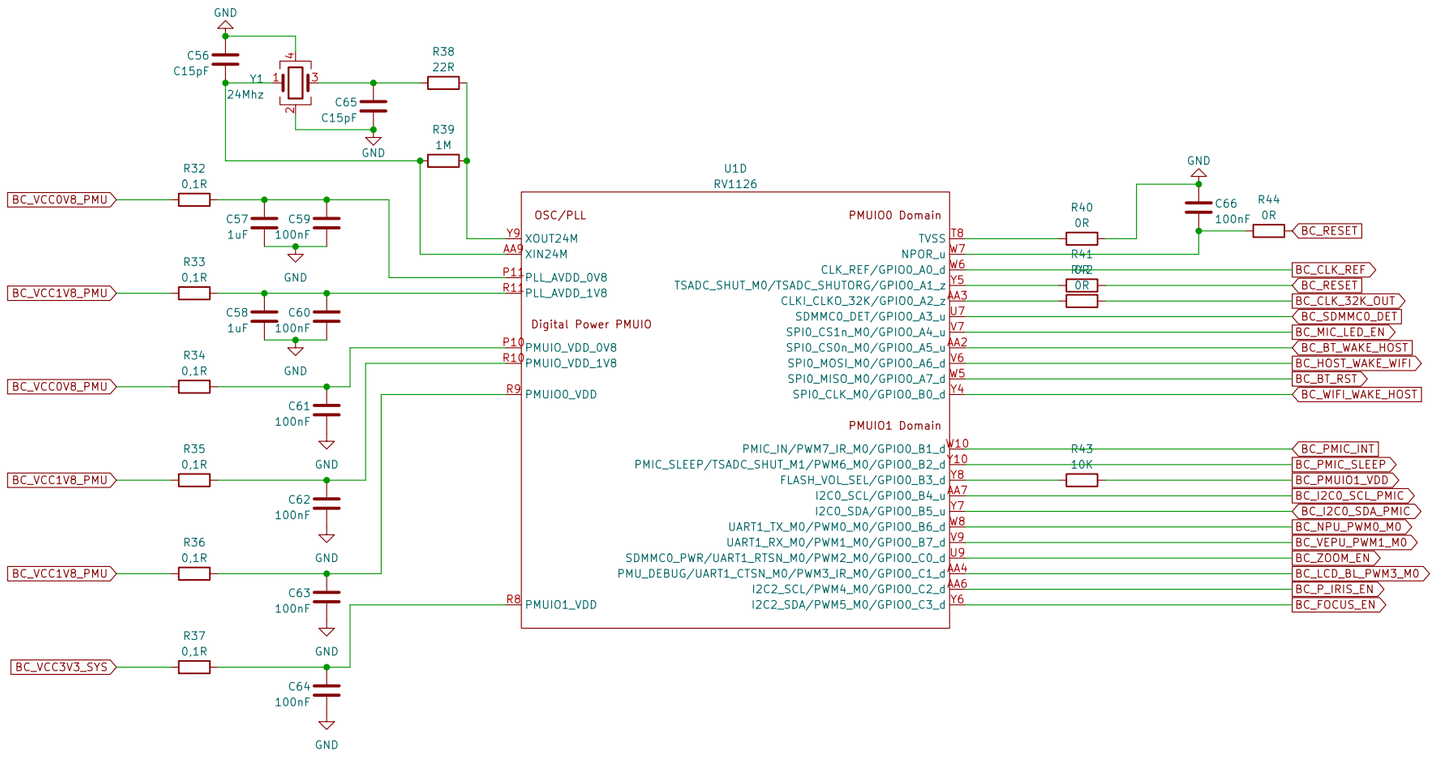

BerryFlight (Daniel Heymann)

Sheet: /Bootstrap and Clocks/
File: bootstrap.kicad_sch

Title: BerryCore

Size: A3	Date: 2021-04-12	**Rev: 0.1**
KiCad E.D.A. kicad (5.99.0-10149-gb2f788adc1)		Id: 5/7

BerryFlight (Daniel Heymann)

Sheet: /Audio/

File: audio.kicad_sch

Title: BerryCore

Size: A3	Date: 2021-04-12	**Rev: 0.1**
KiCad E.D.A. kicad (5.99.0-10149-gb2f788adc1)		Id: 6/7

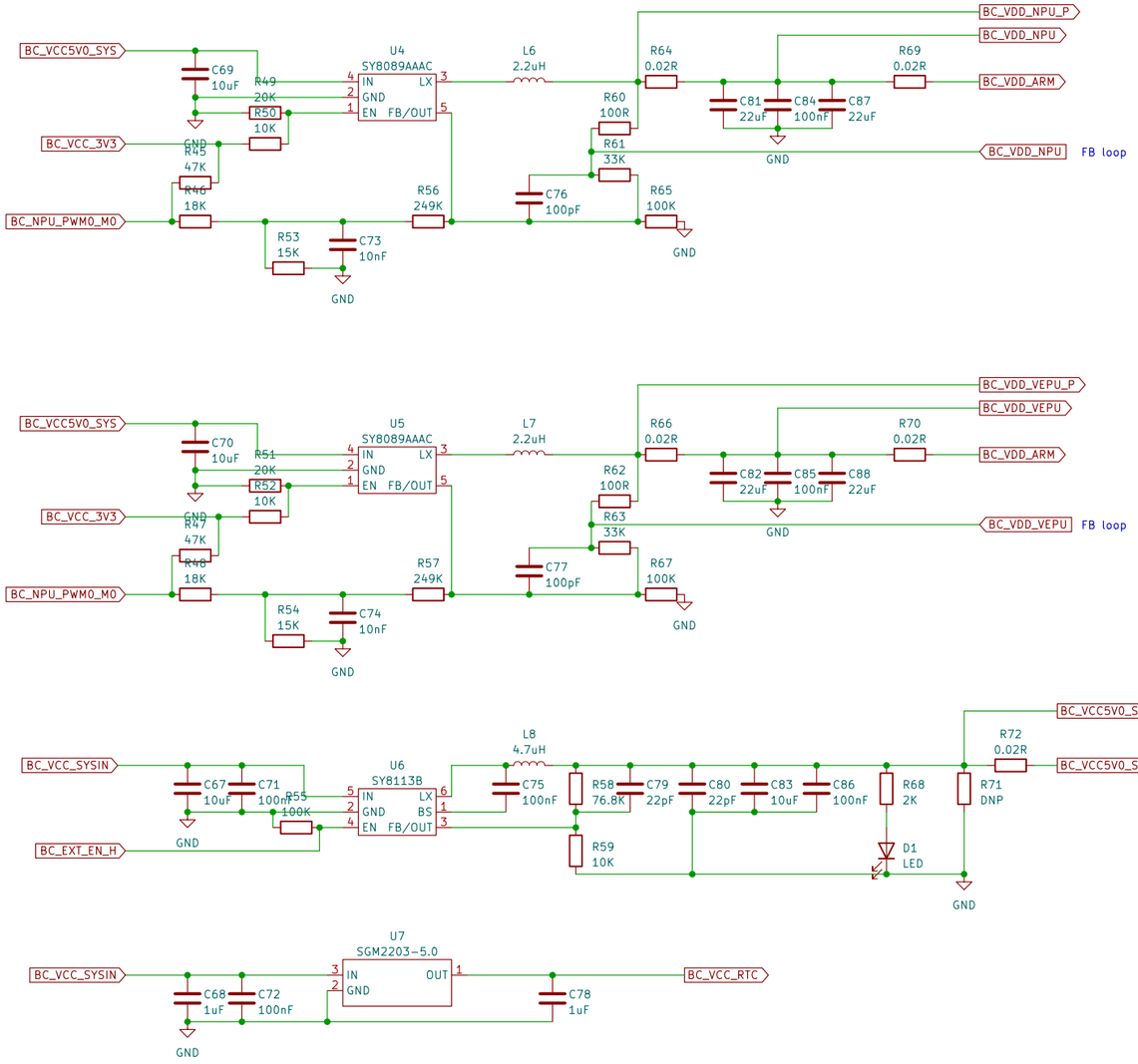

BerryFlight (Daniel Heymann)

Sheet: /more power supplys/
File: more power.kicad_sch

Title: BerryCore

Size: A3	Date: 2021-04-12	**Rev: 0.1**
KiCad E.D.A. kicad (5.99.0-10149-gb2f788adc1)		Id: 7/7