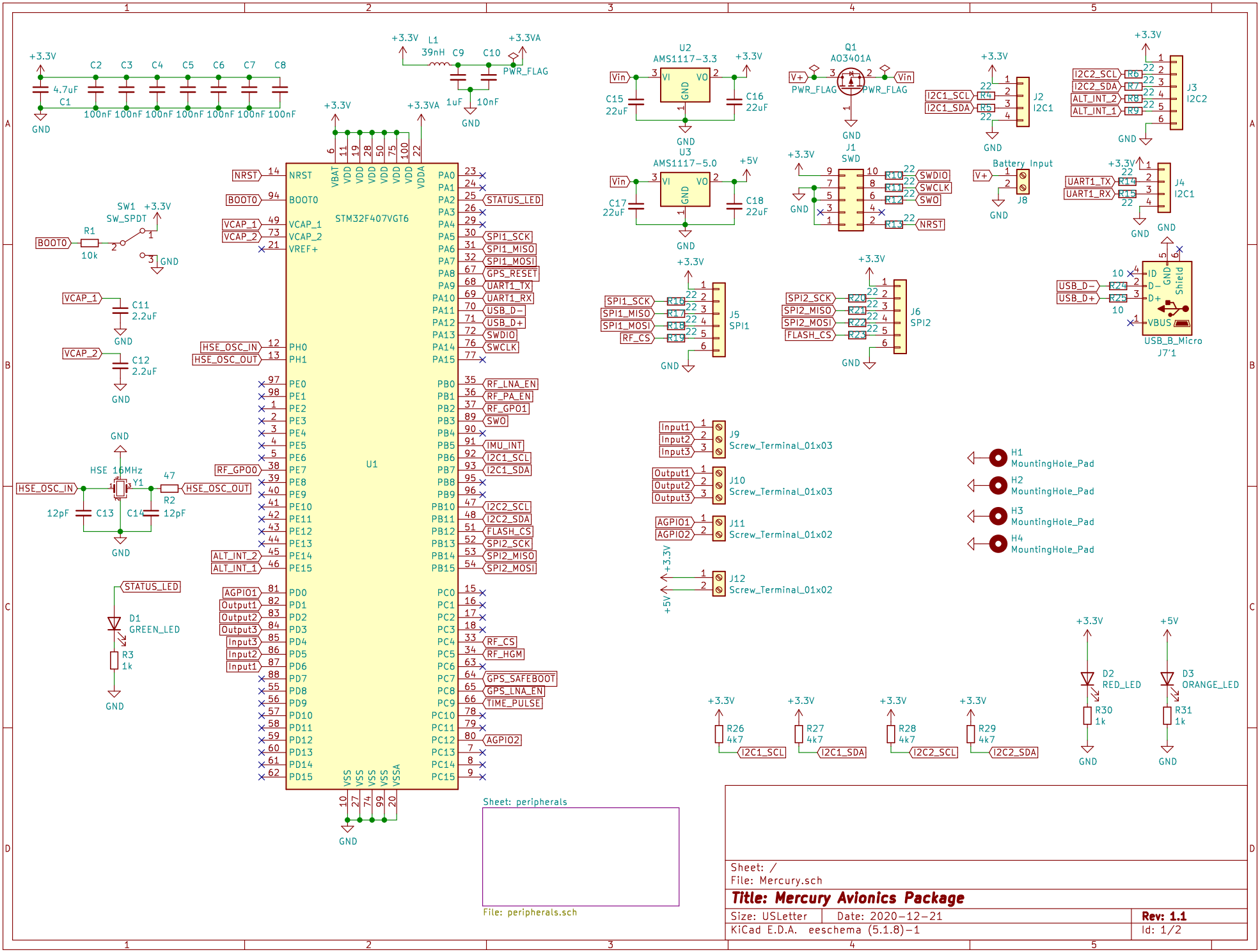

Sheet: /
File: Mercury.sch

Title: Mercury Avionics Package

Size: USLetter	Date: 2020-12-21	Rev: 1.1
KiCad E.D.A. eeschema (5.1.8)-1		Id: 1/2

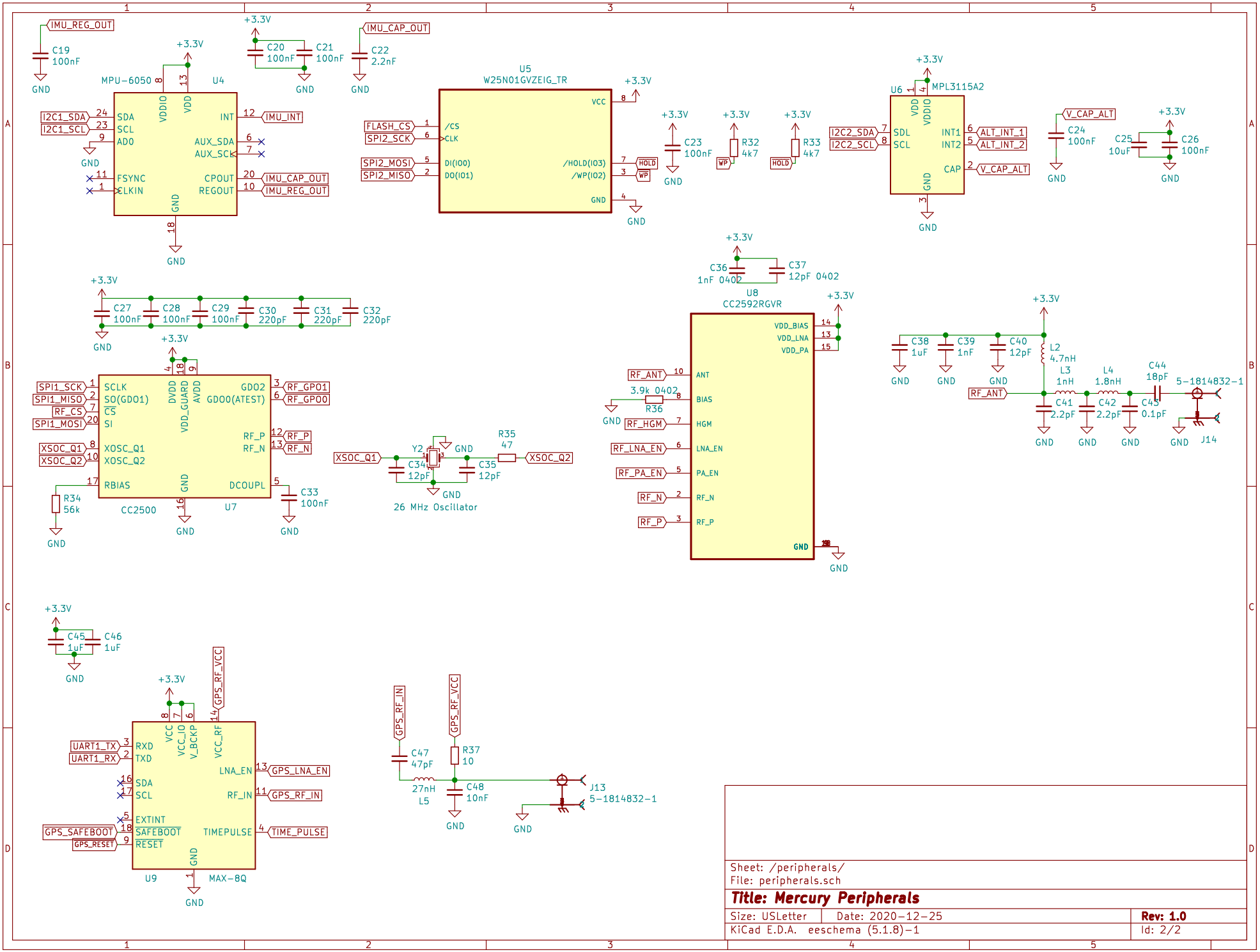

Sheet: /peripherals/
File: peripherals.sch

Title: Mercury Peripherals

Size: USLetter	Date: 2020-12-25	Rev: 1.0
KiCad E.D.A. eeschema (5.1.8)-1		Id: 2/2