2003-11

disco

SAFETY MANUAL

Automatic Dicing Saw

DAD3350

SOFTWARE VERSION 1.2 SERIES

Copyright of this document is owned by Disco Corporation ("Disco"). No part of this document may be copied or reproduced in any form or by any means, without the express written permission of Disco. Also, this document may not be disclosed or transferred to third parties.

This document is printed on recyclable Lint-Free Paper.
- The blue paper is recyclable as used paper just like plain paper.
- The cover paper and adhesive portions are non-recyclable.
(Remove the cover and adhesive portions before recycling.
Recycle the blue paper only.)

UKBSSE*012A

READ CAREFULLY BEFORE USING THIS MANUAL

Introduction

This machine is a dicing saw to cut materials such as silicon wafers, glass substrates and ceramic substrates (referred collectively as "workpiece" hereafter).
The machine contains rotary sections with parts that operate at high speed; high-voltage sections with danger of causing electric shock and drive sections where the workers' physical parts and/or clothing may get caught.
Failure to handle this machine properly may lead to serious injury or death.

Read before using the machine

Before using the machine, read this manual thoroughly and follow strictly all the instructions set forth in this manual.

To assure safety during work associated to operation and maintenance of this machine, it is important for every worker to know where the potential safety hazards lie in this machine. Although it is difficult for Disco to foresee each and every potential safety hazard, various precautionary notes and warnings have been included in this manual to identify and provide preventive knowledge against all foreseeable hazards. Strict observance of all these precautions and other relevant instructions set forth in this manual is thus essential for increased safety assurance.

The safety features of the machine may be seriously affected, in case this machine is modified without gaining the prior consent from Disco or repaired in a manner not stated in this manual.

Therefore, never attempt to modify or repair this machine in a manner not approved by Disco.

Extent of responsibility

- Disco is not responsible for any accident due to any of the following events.
  - When equipment of another manufacturer is added to the machine
  - When the machine or part of the machine is transported, reused, resold or modified
  - When supplied parts or parts designed by users are mounted on the machine
- It is possible that we are not able to carry out repair or maintenance work for reasons of safety and health care of our service or repair personnel, if the machine user refuses to disclose the names and contents of processing materials being used and/or processing piping, for reasons of confidentiality or trade secret protection.

Hazard level

The safety precautions set forth in this document are classified into DANGER, WARNING and CAUTION categories which represent three degree of hazards latent in the machine. These categories are defined as detailed below in accordance with the seriousness and probability level of the hazard. In addition to the above three safety precaution levels, CAUTION without the safety alert symbol (⚠) and NOTICE are used to give safety usage instructions to the user.

Before using the machine, be sure to read and understand all the associated safety precautions set forth in the manual.

Hazard levels are classified as follows:

⚠ DANGER	If you cannot avoid the incident in question, a critical situation in which either critical injury or death is very likely to result. This symbol is used for the incident in which the injury is critical and there is high probability of occurrence.
⚠ WARNING	If you cannot avoid the incident in question, a serious situation in which either critical injury or death may result. This symbol is used for the incident in which the injury is serious but there is not high probability of occurrence.
⚠ CAUTION	If you cannot avoid the incident in question, a medium or slight injury may result. This symbol is used for the incident in which the injury is slight and there is not high probability of occurrence.
CAUTION	If you cannot avoid the incident in question, an accident of property damage may occur.
NOTICE	Indicates the safe way of using the machine as well as precautions to avoid accidents resulting in damage to property.

Safety label

Safety labels are affixed to the potentially hazardous sections of this machine. Before using this machine, verify the label positions and thoroughly understand the precautions and warning indicated by the safety labels.

Label	Hazard Level	Meaning of Label
Rotary Blade Label		It is possible that your hands and fingers may be cut by the rotating blade. Observe the following precautions for at least 15 seconds until the spindle comes to a complete stop: - Do not place your hands or fingers near the blade or flange. - Ensure that the cover is kept closed.
Driving Section Label		It is possible that yours hands and fingers may be caught and injured by the driving section. While the power is ON, ensure that the cover is kept closed.
Electrical Shock Hazard Label 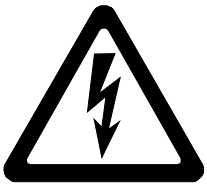		Use care to avoid possible electrical shock hazard.

EULA TERMS FOR WINDOWS NT EMBEDDED VERSION 4.0 FOR EMBEDDED SYSTEMS

- You have acquired a device ("DEVICE") which includes software licensed by DISCO from one or more software licensors ("DISCO Software Suppliers"). Such software products, as well as associated media, printed materials, and "online" or electronic documentation ("SOFTWARE") are protected by international intellectual property laws and treaties. The SOFTWARE is licensed, not sold. All rights reserved.
- IF YOU DO NOT AGREE TO THIS END USER LICENSE AGREEMENT ("EULA"), DO NOT USE THE DEVICE OR COPY THE SOFTWARE. INSTEAD, PROMPTLY CONTACT DISCO FOR INSTRUCTIONS ON RETURN OF THE UNUSED DEVICE(S) FOR A REFUND. ANY USE OF THE SOFTWARE, INCLUDING BUT NOT LIMITED TO USE ON THE DEVICE, WILL CONSTITUTE YOUR AGREEMENT TO THIS EULA (OR RATIFICATION OF ANY PREVIOUS CONSENT).
- GRANT OF SOFTWARE LICENSE. This EULA grants you the following license:
  - ∇ You may use the SOFTWARE only on the DEVICE.
  - ∇ NOT FAULT TOLERANT. THE SOFTWARE IS NOT FAULT TOLERANT. DISCO HAS INDEPENDENTLY DETERMINED HOW TO USE THE SOFTWARE IN THE DEVICE, AND "DISCO Software Suppliers" HAS RELIED UPON DISCO TO CONDUCT SUFFICIENT TESTING TO DETERMINE THAT THE SOFTWARE IS SUITABLE FOR SUCH USE.
  - ∇ NO WARRANTIES FOR THE SOFTWARE. THE SOFTWARE is provided "AS IS" and with all faults. THE ENTIRE RISK AS TO SATISFACTORY QUALITY, PERFORMANCE, ACCURACY, AND EFFORT (INCLUDING LACK OF NEGLIGENCE) IS WITH YOU. ALSO, THERE IS NO WARRANTY AGAINST INTERFERENCE WITH YOUR ENJOYMENT OF THE SOFTWARE OR AGAINST INFRINGEMENT. IF YOU HAVE RECEIVED ANY WARRANTIES REGARDING THE DEVICE OR THE SOFTWARE, THOSE WARRANTIES DO NOT ORIGINATE FROM, AND ARE NOT BINDING ON, "DISCO Software Suppliers".
  - ∇ Note on Java Support. The SOFTWARE may contain support for programs written in Java. Java technology is not fault tolerant and is not designed, manufactured, or intended for use or resale as online control equipment in hazardous environments requiring fail-safe performance, such as in the operation of nuclear facilities, aircraft navigation or communication systems, air traffic control, direct life support machines, or weapons systems, in which the failure of Java technology could lead directly to death, personal injury, or severe physical or environmental damage. Sun Microsystems, Inc. has contractually obligated "DISCO Software Suppliers" to make this disclaimer.
  - ∇ No Liability for Certain Damages. EXCEPT AS PROHIBITED BY LAW, "DISCO Software Suppliers" SHALL HAVE NO LIABILITY FOR ANY INDIRECT, SPECIAL, CONSEQUENTIAL OR INCIDENTAL DAMAGES ARISING FROM OR IN CONNECTION WITH THE USE OR PERFORMANCE OF THE SOFTWARE. THIS LIMITATION SHALL APPLY EVEN IF ANY REMEDY FAILS OF ITS ESSENTIAL PURPOSE. IN NO EVENT SHALL "DISCO Software Suppliers" BE LIABLE FOR ANY AMOUNT IN EXCESS OF U.S. TWO HUNDRED FIFTY DOLLARS (U.S.$250.00).
  - ∇ Limitations on Reverse Engineering, Decompilation, and Disassembly. You may not reverse engineer, decompile, or disassemble the SOFTWARE, except and only to the extent that such activity is expressly permitted by applicable law notwithstanding this limitation.
  - ∇ SOFTWARE Transfer allowed but with restrictions. You may permanently transfer rights under this EULA only as part of a permanent sale or transfer of the Device, and only if the recipient agrees to this EULA. If the SOFTWARE is an upgrade, any transfer must also include all prior versions of the SOFTWARE.
  - ∇ EXPORT RESTRICTIONS. You acknowledge that SOFTWARE is of US-origin. You agree to comply with all applicable international and national laws that apply to the SOFTWARE, including the U.S. Export Administration Regulations, as well as end-user, end-use and country destination restrictions issued by U.S. and other governments. For additional information on exporting the SOFTWARE, see http://www.microsoft.com/exporting/.
  - ∇ If you use the Device to access or utilize the services or functionality of Microsoft Windows NT Server 4.0 (all editions) or Microsoft Windows 2000 Server (all editions), or use the Device to permit workstation or computing devices to access or utilize the services or functionality of Microsoft Windows NT Server 4.0 or Microsoft Windows 2000 Server, you may be required to obtain a Client Access License for the Device and/or each such workstation or computing device. Please refer to the end user license agreement for Microsoft Windows NT Server 4.0 or Microsoft Windows 2000 Server for additional information.

SHRINK WRAP LICENSE

BY ANY USE OF THIS SOFTWARE, YOU ("LICENSEE") INDICATE YOUR ACCEPTANCE OF THE TERMS OF THIS SHRINK WRAP LICENSE AGREEMENT (“AGREEMENT”). YOU ARE GRANTED A LICENSE TO USE THE SOFTWARE PROVIDED UNDER THIS AGREEMENT (“SOFTWARE”) SOLELY ON THE CONDITION THAT YOU AGREE TO THE TERMS OF THIS AGREEMENT. IF YOU DO NOT AGREE TO ALL PROVISIONS OF THIS AGREEMENT, YOU ARE PROHIBIT FROM USING THIS SOFTWARE AND RECEIVE NO LICENSE UNDER THIS AGREEMENT.

1. LICENSE GRANT. Subject to receipt of all payments due from Licensee and Licensee’s compliance with all terms and conditions of this Agreement, Phoenix Technologies Ltd., with offices at 411 E. Plumeria Drive, San Jose, CA 95134 (“Company”), hereby grants Licensee a non-exclusive, nontransferable copyright license to use the object code form of the Software only on the product or device (“Device”) accompanying the Software, and for no other purpose whatsoever. The rights and licenses regarding the Software granted under this Agreement are not transferable or sublicenseable by Licensee. Under no circumstance shall Licensee, whether directly or through any third party, either disassemble, decompile, or reverse engineer the Software.

2. COPIES. Licensee may not use or copy the Software or any part of the Software except as necessary in connection with Licensee’s authorized distribution or use of the Device. Licensee agrees to be responsible for any copying or copyright infringement of the Software in violation of this Agreement. The Software is licensed only as a single integrated product. The Software may not be distributed, used, or copied for any purpose except for use with the Device.

3. PROPRIETARY SOFTWARE. The Software is proprietary to Company and its suppliers. Company and its suppliers reserve all rights not expressly granted in this Agreement. By using the Software, Licensee acknowledges that the Software and accompanying materials, and any proprietary information contained in the media on which the Software is installed, are proprietary in nature and were developed or acquired at great expense. Licensee agrees not to disclose to others or utilize such trade secrets or proprietary information except as expressly permitted by this Agreement.

4. EXPORT AND TAXES. Licensee certifies that neither the Software nor any portion of the Software will be exported to any country in violation of the United States Export Administration Act or related laws and regulations. Licensee shall be liable for and shall pay all charges and taxes (local, state, federal and foreign), including all sales and use taxes, which may now or in the future be imposed or levied upon the license or possession of the Software.

5. WARRANTIES AND LIMITATION OF LIABILITY. LICENSEE UNDERSTANDS AND AGREES THAT THE SOFTWARE IS PROVIDED "AS IS" AND WITH NO WARRANTIES WHATSOEVER FROM COMPANY OR COMPANY’S SUPPLIERS, WHETHER EXPRESS, IMPLIED OR STATUTORY, INCLUDING, BUT NOT LIMITED TO ANY WARRANTY OF MERCHANTABILITY, NONINFRINGEMENT, FITNESS FOR ANY PARTICULAR PURPOSE, OR OTHERWISE ARISING OUT OF ANY PROPOSAL, SPECIFICATION, OR SAMPLE. IN NO EVENT WILL COMPANY OR ITS SUPPLIERS BE LIABLE TO LICENSEE FOR ANY LOSS OF PROFITS, LOSS OF USE, INCIDENTAL, CONSEQUENTIAL, INDIRECT, OR SPECIAL DAMAGES ARISING OUT OF THIS AGREEMENT, WHETHER OR NOT COMPANY OR ITS SUPPLIERS HAVE ADVANCE NOTICE OF THE POSSIBILITY OF SUCH DAMAGES.

6. TERMINATION. The Software license granted under this Agreement is effective until terminated, and will terminate immediately without notice to Licensee in the event Licensee fails to comply with any provision of this Agreement. Upon any such termination, Licensee must destroy the Software, any copies, and any related documentation. Licensee's obligations under this Agreement shall survive termination of the license granted under this Agreement for the earlier of the longest term allowed by applicable law or until Company and its Suppliers makes the Software available to the public without restrictions on disclosure, if such an event ever occurs.

7. GENERAL. Licensee agrees that it has read this Agreement, understands it, agrees to be bound by its terms, and that this Agreement is the complete and exclusive agreement between Company and Licensee regarding the Software, and that this Agreement supersedes and merges all prior oral or written understandings between the parties relating to this the subject matter of this Agreement.

INTRODUCTION

Purpose of this manual

This is a manual prepared as the Safety Manual for Automatic Dicing Saw 3000 series model, DAD3350, for the purpose of describing the safety requirements and all other safety-related matters that are relevant to operation and maintenance of this machine.

To ensure safety

In order to ensure safety, be sure to thoroughly read and fully understand the important safety information set forth in this manual, before performing any operation.
The contents of this manual is based on software version 1.2 series.
Prior to operating, installing or servicing this machine, the personnel in charge of each work must gain a full understanding of the safety precautions, instructions and all other safety-related information set forth in this manual.
For proper installation or maintenance of this machine, assign these jobs to a qualified person who completed the educational curriculum offered by Disco (referred to as "maintenance personnel" hereinafter).

Definition of manager and personnel

The definition of "manager" and "personnel" applied in this manual is as follows:

Category	Applicable Personnel	Job Description
Manager	Management representative	The person who is responsible for overall management of the machine and the personnel.
Personnel	Maintenance personnel	The qualified person who received machine maintenance training offered by Disco.
	Data maintenance personnel	The qualified person who is responsible for the management of software data used for the machine.
	Operator	The person who operates the machine to process workpieces.

Request on replacement of parts and components

For parts replacement, be sure to use genuine Disco brand parts. If any parts that are not of genuine Disco brand are used for replacement, Disco shall assume no liability for any damages caused by these parts.
For replacement of components that use parts accredited as UL Standards products, be sure to replace them respectively to new components that use UL Standards products.
For replacement of critical parts, be sure to contact your nearest Disco office first for prior consultation. If any critical parts are replaced without consulting Disco beforehand, Disco shall assume no liability for any consequences arising therefrom.

INSTRUCTION MANUALS

Manuals prepared for this machine

The following six manuals are provided for this machine.
This manual is the Safety Manual indicated by the arrow.

Manual	Who should read	Contents
Safety Manual	- Management representative - Data maintenance personnel - Maintenance personnel	Information for ensuring safety during machine operation, installation and maintenance
Installation Manual	Maintenance personnel	Procedures for machine installation and adjustment
Operation Manual	Operator	Operational procedures to be performed by operators
Data Maintenance Manual	Data maintenance personnel	Screen contents for data entry and data setting procedures
Maintenance Manual	Maintenance personnel	Procedures for maintenance, inspection and adjustment of the machine performed by the customer's personnel.
Technical Reference	Maintenance personnel	Machine specifications/circuit diagrams Illustrations Parts lists

Unit notation

International System of Unit is adopted for the measurement units used in this manual. The values in the parenthesis are reference data. Also, all the pressure values used in this manual are as they appear as readings on the pressure gauges/meters (gauge pressure).

SECTIONAL COMPOSITION

Sectional composition diagram

The name and function(s) of each section that constitutes this machine are as shown and described respectively in the following diagrams and table.

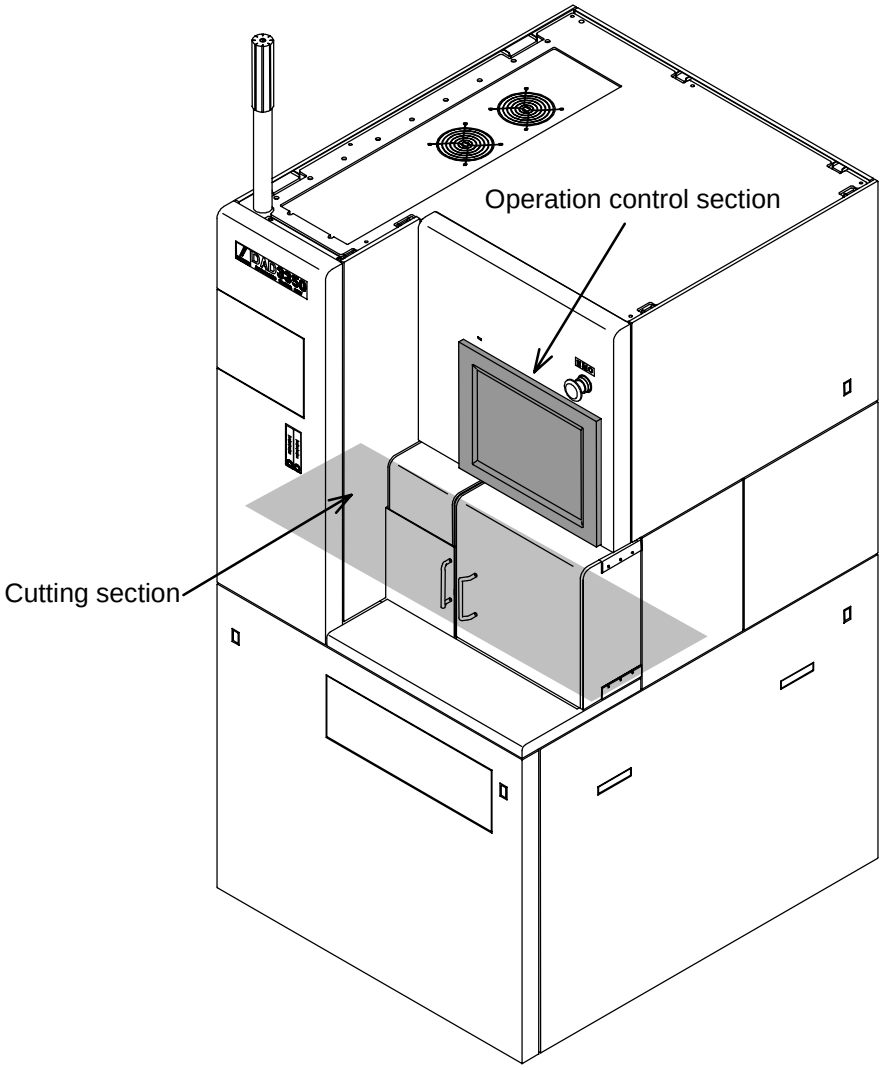

Name	Function
Cutting section	Cuts the workpieces.
Operation control section	With the touch panel, operators enter data or manipulate the machine by function buttons. This touch panel also displays the operating screens and the microscope images.

External view

The name and function(s) of each main external constituent of this machine are as shown and described respectively in the following diagram and table.

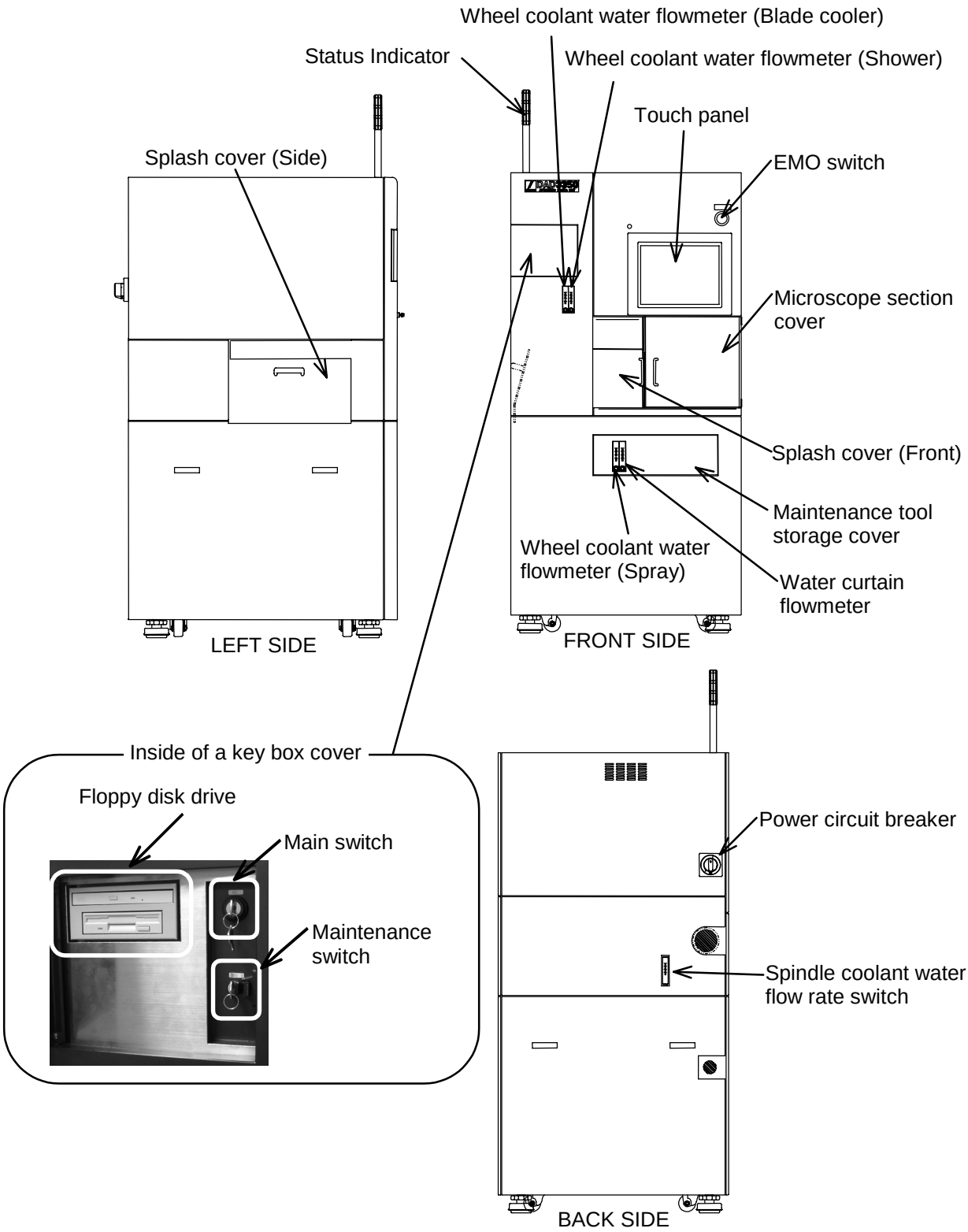

Name	Function
Status indicator	Indicates the machine operating status with the green and yellow lamps. When an error occurs, the red lamp will blink.
Wheel coolant water flowmeter (Blade cooler)	Controls the flow rate of the wheel coolant water discharged from the blade cooler nozzle.
Wheel coolant water flowmeter (Shower)	Controls the flow rate of the wheel coolant water discharged from the shower nozzle.
Touch panel	Displays operating screens and microscope images. Using the touch panel, an operator can directly set, enter or finalize various data or select desired machine functions.
EMO switch	Emergency stop switch. If it is pressed, the machine power will be shut off.
Microscope section cover	Functions as a safety device. To open the cover, pull it toward you.
Splash cover (Front)	Prevents cutting water from flying to outside the machine, and also functions as a safety device. To open the cover, slide it to the left. In the manuals other than this page, this cover is expressed as "Splash cover F".
Maintenance tool storage cover	Stores the tools used for blade replacement (retaining nut attachment/removal jig, etc) and maintenance (air injection gun, etc).
Water curtain flowmeter [Optional Accessory]	Controls the flow rate of the water curtain.
Wheel coolant water flowmeter (Spray) [Optional Accessory]	Controls the flow rate of the wheel coolant water discharged from the spray nozzle.
Power circuit breaker	Turn ON and OFF the facility-side power supply.
Spindle coolant water flow rate switch	Sensors a drop in the flow rate of the spindle coolant water.
Floppy disk drive	External memory device.
Main switch	Turns ON and OFF the machine power by inserting a key.
Maintenance switch	Used by maintenance personnel.
Splash cover (Side)	Prevents cutting water from flying to outside the machine. As the cover is equipped with a sensor, an error occurs when it is disengaged. In the manuals other than this page, this cover is expressed as "Splash cover S".

Axial composition diagram

The composition of the sections using an axis, and the name and function(s) of each axial section and its function(s) are as shown and described respectively in the following diagram and table.

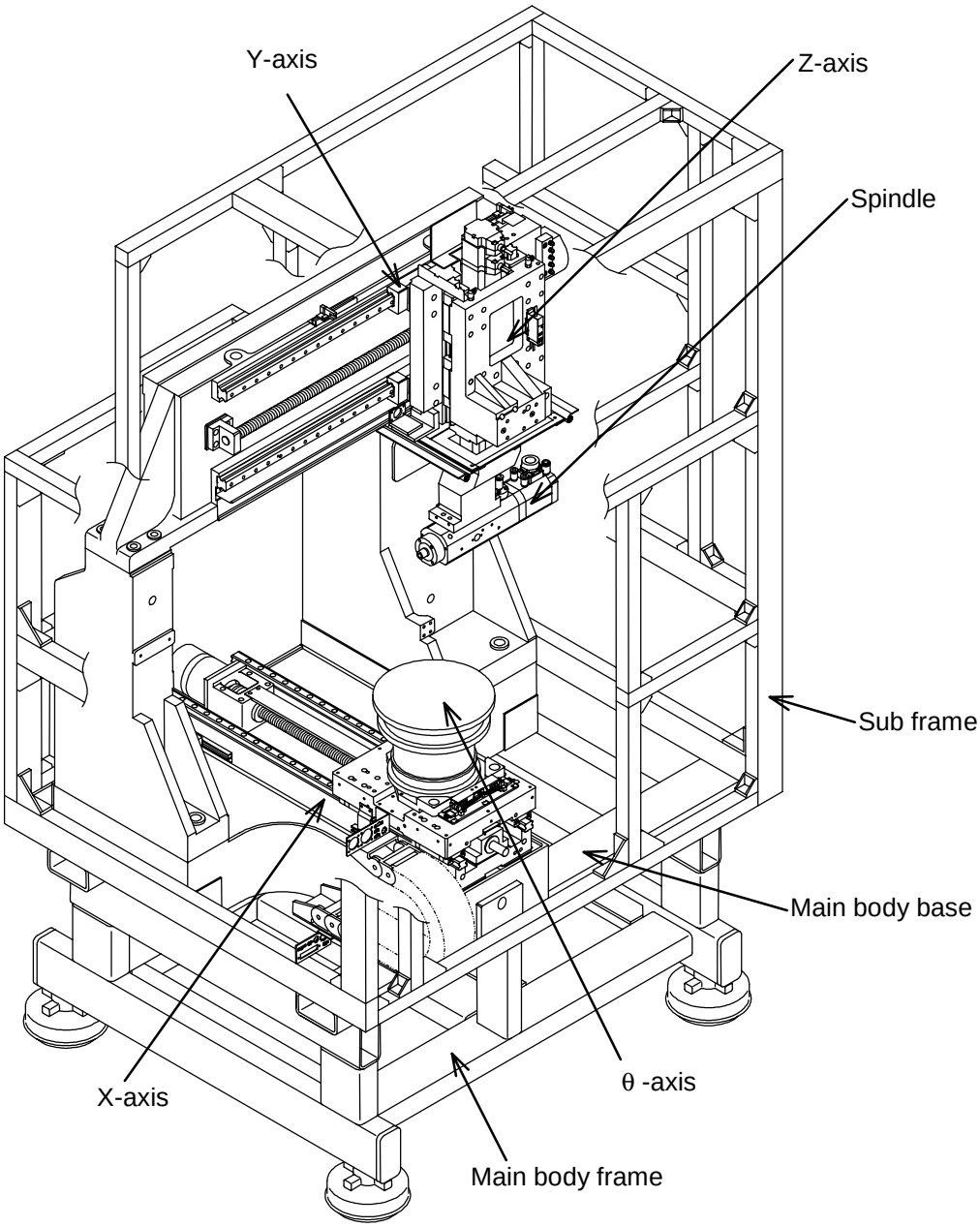

Name	Function
X-axis	Moves the chuck table from side to side.
Y-axis	Moves the spindle back and forth.
Z-axis	Moves the spindle up and down.
θ -axis	Turns the chuck table.
Spindle-axis	Turns the blade at high speed.
Main body base Main body frame Sub frame	Supports the main structure of the machine.

CONTENTS

READ CAREFULLY BEFORE USING THIS MANUAL

INTRODUCTION Intro-1

CONTENTS Contents-1

IMPORTANT SAFETY INFORMATION Safety-1

1. General Safety Precautions Safety-2
   - 1-1. Precautions on Safe Use of this Machine Safety-3
   - 1-2. Precautions on Safe Hoisting, Transfer and Installation of this Machine .. Safety-5
   - 1-3. Precautions on Safe Operation and Maintenance of this Machine Safety-10

2. Inherently Hazardous Areas and Ways to Avoid Hazards Safety-20
   - 2-1. Inherently Hazardous Operation Areas and Ways to Avoid the Area-specific Hazards Safety-21
   - 2-2. Inherently Hazardous Maintenance Areas and Ways to Avoid the Area-specific Hazards Safety-25

3. EMO Switch Safety-30

4. Power Circuit Breaker Safety-34
   - 4-1. About the Power Circuit Breaker Safety-35
   - 4-2. Electrical Ratings of the Power Circuit Breaker Safety-37
   - 4-3. Circuit Breaker Lever Lockout Safety-38

5. Interlock Mechanism Safety-39
   - 5-1. About the Interlock Mechanism Safety-40
   - 5-2. Interlock Mechanism of the Splash Cover F/ Microscope section cover. Safety-44
   - 5-3. How to Release the Lock Cylinder Safety-46
   - 5-4. Interlock List Safety-52

CONTENTS

6. Safety Labels Safety-58

7. Critical Components List Safety-63

ADDRESS LIST

IN AN EVENT OF AN ACCIDENT

IMPORTANT SAFETY INFORMATION

Contents of this chapter

This chapter describes the precautionary matters for ensuring safety during operation and the protective functions that comprise the safety mechanism of this machine itself.

Section No.	Title	Contents
1	General Safety Precautions	- Safety precautions to be observed during hoisting of the machine - Safety precautions to be understood before operation - Safety precautions to be observed during operation
2	Inherently Hazardous Areas and Ways to Avoid Hazards	- Areas where hazards are inherent and the ways of avoiding the hazards
3	EMO Switch (Emergency Off Switch)	- Structure of the emergency off (EMO) switch - Function of the EMO switch
4	Power Circuit Breaker	- Structure of the power circuit breaker - Function of the power circuit breaker
5	Interlock Mechanism	- Structure of the interlock mechanism - Function of the interlock mechanism
6	Safety Labels	- Types of safety label - Positions to affix the safety labels
7	Critical Components List	- List of components adopted for use in this machine as components of critical importance to safety.

1. General Safety Precautions

Contents of this section

This section describes the safety precautions on all levels of work related to this machine that must be understood beforehand without fail by all the workers in charge of the respective work and observed strictly throughout their work.

Section No.	Title
1-1	Precautions on Safe Use of this Machine
1-2	Precautions on Safe Hoisting, Transfer and Installation of this Machine
1-3	Precautions on Safe Operation and Maintenance of this Machine

1-1. Precautions on Safe Use of this Machine

Precautions on safe use of this machine

NOTICE

- Obligation to instruct the workers
  Instruct the personnel in charge of maintenance of this machine to read all the safety precautions set forth in this Safety Manual without fail before proceeding to work.
- Regarding the workers who do not seem to have a clear understanding of the matters discussed in the safety precautions
  In case there are some workers who still do not seem to have a clear understanding of all the matters discussed in the safety precautions, provide them further explanation that will enable them to understand for sure all what they need to know and keep in mind in regard to the safety precautions provided in this chapter.
- Obligation to perform periodic inspection
  The machine must be inspected on a periodic basis. Disco shall not be liable for any accidents that occur due to failure in implementing an appropriate periodic inspection program.
- Maintenance personnel
  Maintenance of this machine must be conducted by qualified workers who have received formal training on maintenance.
- Proper installation of safety devices
  In case any covers or parts incorporated with a safety interlock mechanism become damaged, stop the machine and repair the damaged parts immediately.
- Interlock connection terminal at the facility side [special specification]
  This machine is equipped with exhaust air and drain water reservoir tank interlock connection terminals to enable the exhaust /drain pipes to be interlocked with the exhaust/drain piping systems provided at the facility side.
  For details on the connection of these terminals to the interlock system at the facility side, contact your nearest Disco office.
- Control of exhaust air/drain water/contaminants
  Depending on the type of workpiece that is processed, hazardous substance may be produced as a result of the cutting operation. Exhaust air, drainage and contamination produced by this machine must be controlled and disposed of, in accordance with the local environmental regulations.

NOTICE

- Relocation/disposal of this machine
  Regarding the relocation or disposal of this machine, Disco will be responsible for posting the detailed precautionary notes at the old site and management of the new data on the installation site to which the machine will be relocated.
  When there is a plan to relocate or dispose of this machine, contact your nearest Disco office or Disco engineering service division.
- Exhaust air sampling port [special specification]
  This machine is a type that requires a ventilation system to discharge exhaust air. When there is a need to measure the exhaust air discharged from this machine to comply with the relevant legal regulations applied locally, use a sampling port, which is provided at the location indicated below. (connection port : Rc1/4 female)

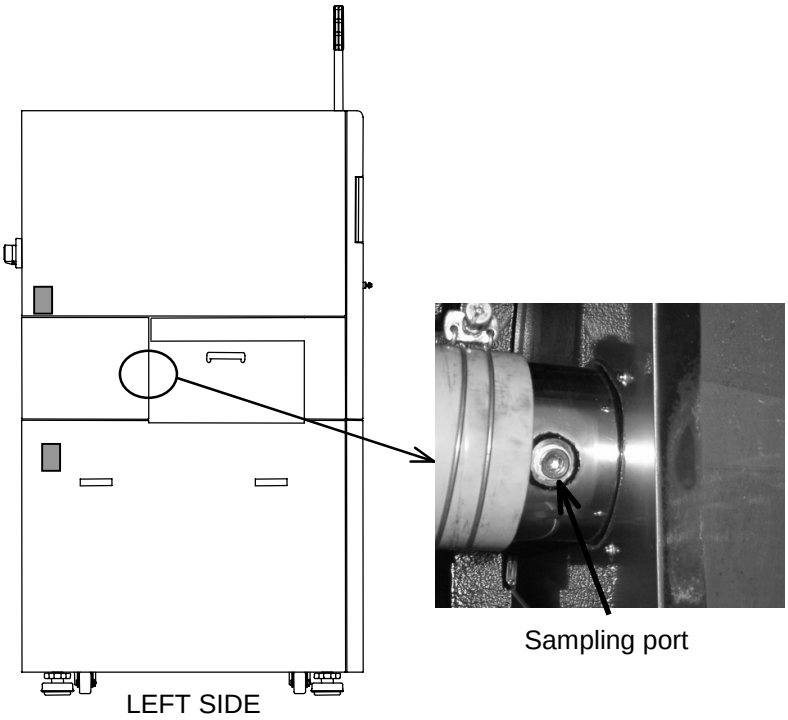

- About safety goggles, protective gloves, stepstools, flashlights or alcohol
  Neither safety goggles, protective gloves, stepstools, flashlights nor alcohol, all of which are necessary for maintenance work, are not supplied with the machine. Use what are furnished in your factory or what comply with your factory's standards.

1-2. Precautions on Safe Hoisting, Transfer and Installation of this Machine

Precautions on safe hoisting, transfer and installation of this machine

This section describes the precautionary matters that require particular attention during hoisting, transfer and installation of this machine and utility connection.

DANGER

- Hoisting the machine
  If the machine accidentally falls while it is hoisted, any person staying below the machine could be crushed to death or seriously injured. Moreover, the machine may swing like a pendulum while it is hoisted. If there is someone in the way, this person may be pressed against the wall by the swinging machine, or the machine may bump into the person who, as a result, may get seriously injured or die in the worst case.
  Therefore, be sure to stay away from the area beneath the machine and anywhere nearby while the machine is hoisted.
- Lifting crane and hoisting jigs
  If the machine accidentally falls while it is hoisted, any person staying below the machine could be crushed to death or seriously injured.
  Therefore, be sure to secure the machine firmly with the designated type of hoisting jigs designed specifically for such hoisting purposes.
  The mass of the machine including the hoisting jigs is approximately 1,500 kg.
  Ensure that the maximum hoisting load of the lifting crane withstands the machine weight, boom length and hoisting angle.
- Transferring the machine by pallet truck
  When a pallet truck is used to transfer the machine, make sure that the center of gravity of the machine matches with the center of the pallet truck. In case the machine is transferred while it is off-balanced (for not placing its weighted center right in the center of the pallet truck), it may fall from the truck during the transfer and cause anyone nearby to be crushed to death or seriously injured.
  The mass of the machine including the hoisting jigs is approximately 1,500 kg. The pallet truck used for the transfer of this machine must be a type that is designed to be capable of lifting, lowering and transporting a load of 1,500 kg, and with a fork having a length of at least 1,100 mm.

WARNING

- Connection of the power supply
  When you work on the wiring as a part of the power cable connection operation while the electricity is flowing through the machine, you may receive an electric shock that may lead to serious injury or death.
  Therefore, be sure to shut the power supplied from the facility before wiring the power cables.
- Connection of the power supply
  If you touch the machine that is not grounded, you may receive an electric shock that may lead to serious injury or death.
  Therefore, be sure to connect the PE line first before connecting all the other power cable lines.
- Jacking up the machine
  If the machine topples down while it is jacked up, any person staying nearby may be crushed by the machine. Moreover, if any of the leveling mounts becomes loose or slips out of the machine, the person's feet or hands may get caught or be cut off by the machine.
  Therefore, never place your feet or hands under the machine while it is jacked up.
- Anchoring the machine
  Machine anchors designed to provide human/equipment protection in the event of an earthquake or other forms of disaster are optionally available at Disco.
  Disco recommends its customers to use these anchors to secure their machines firmly at their respective sites at the time of installation.

WARNING

- Locking the circuit breaker lever
  To perform the maintenance of the machine, switch off the power of the machine, and lock the circuit breaker lever with a padlock or by any other equivalent means to prevent the machine from operating unexpectedly when someone touches the breaker lever unknowingly or inadvertently. Lock the circuit breaker lever according to the following steps:
  1) Open the key box cover which is located at the front side of the machine. Turn the main switch to OFF position and then take out the key.
  2) Turn the circuit breaker lever located at the rear side of the machine to the OFF position. Then, lock up the circuit breaker lever with a padlock or by any other equivalent means, in the way shown below.

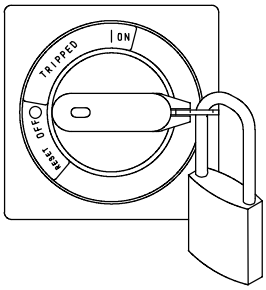

- Regarding the machine equipped with UPS [optional accessory]
  When the facility power supply is shut off while the machine power is still switched on, the UPS (Uninterruptible Power Supply) will activate and maintain the internal power for 90 seconds. During this time, the line between the contact point where the facility power supply was shut off and the machine will remain energized with high voltage of dangerous level, and may become a cause of electric shock that could result in serious injury or death. Therefore, do not place your hands in the sections where the electric current is still flowing.

- When the machine interior and floor get wet with water
  If you operate the machine while its interior and floor are wet with water, you may receive an electric shock that could result in serious injury or death.
  If the machine gets wet with water, do not switch on the facility power supply until the wetted areas dry up. Likewise, if the floor gets wet with water, switch off the facility power supply and wipe the floor until it is entirely dry.

CAUTION

Performing maintenance with the outer cover removed
When the outer cover of the machine is removed for the purpose of maintenance, do not leave the removed cover standing against the machine. When the cover topples down due to the effect of an earthquake or other sources of vibration/impact, the maintenance personnel working near where the cover was placed may get hurt. Therefore, whenever you remove the outer cover for the purpose of maintenance, be sure to keep it at a place that is far enough from the maintenance work area.

CAUTION

- Machine installation environment
  Comply with the recommended machine installation conditions (such as, room temperature, humidity and temperature of the spindle/wheel coolant water). If the machine is installed in an environment that does not conform to the installation conditions recommended by Disco, corrosion may occur due to condensation or other rust-causing factors. Moreover, inadequate installation conditions may also have an adverse effect on the cutting precision of the machine.
  Therefore, Disco strongly suggests the customers to install the machine at a site with an environment that meets the recommended installation conditions. For details on the recommended environmental conditions, refer to Installation Manual, Section A-3, [Installation Environment].
- Securing the axes while transferring the machine
  When there is a need to move the machine, attach the accessory metal fixtures to the designated axes to secure them in place during the transfer.
- Transferring the machine
  When the machine passes a floor that is bumpy or with varying surface levels, the impact applied to the machine while it moves on such irregular floor may have an adverse effect on its cutting precision.
  Therefore, whenever there is a need to move the machine elsewhere, be sure to choose a flat route.
- Mislaid tools and materials
  Make sure that no tools or materials are left inside the machine.

CAUTION

- Installation space
  In selecting the site to install this machine, there is a need to take into account of a free space of adequate size used for maintenance purposes. This maintenance space must normally be kept as an open area with nothing placed. For details on the maintenance space, refer to Installation Manual, Section A-3-1, [Installation Site].
- Connection of the water
  When the quality of wheel and spindle coolant water is different each other, improper piping of them could lead to workpiece breakage or deterioration of cutting accuracy.
  Take care not to install the hoses of wheel and spindle coolant water to the opposite side.

1-3. Precautions on Safe Operation and Maintenance of this Machine

Precautions on safe operation and maintenance of this machine

This section describes the precautionary matters that the personnel in charge of operation and maintenance must understand beforehand and be careful of during their respective work.

WARNING

- Blade section
  Since the tip of the blade is sharp-edged, there is a danger of your fingers or hands being cut or amputated when they come into contact with this part of the blade.
  Therefore, be sure not to place your fingers or hands under the blade.

- Moving sections
  If you place your fingers or hands in moving sections driven by motor or air cylinder, they may be caught or cut off.
  Do not touch any moving section while it is operated. Also, do not insert your fingers or hands into any moving area.
  When there is a need to adjust the position of the workpiece or remove it, do so after bringing the machine to a halt and then confirming that all axes have stopped completely.

- Spindle rotation
  The spindle rotating speed varies depending on the outside diameter of the installed blade. If the spindle is rotated at a speed higher than the maximum permissible speed for the blade outside diameter, blade breakage or flange separation may occur and cause injury to the personnel or damage to the machine.
  Be sure that the employed spindle rotating speed is suitable for the outside diameter of the installed blade.
  The maximum permissible spindle rotating speed is as follows:
  60,000 min^{-1} (rpm) for 2-inch blade
  30,000 min^{-1} (rpm) for 3-inch blade

WARNING

- Rotary blade section
  The splash cover F has a mechanism to prevent the cover from opening during spindle rotation. When the spindle is rotating and the X-axis is located at the place other than its origin position, the microscope section cover will not open, as well. However, since the tip of the blade is sharp-edged, there is a danger of your fingers or hands being cut or amputated when they come into contact with this part of the blade.
  Therefore, be sure not to place your fingers or hands under the blade.
  It takes up to approximately 15 seconds for a rotating spindle to come to a complete stop (when it rotates at 60,000min^{-1} [60,000rpm]). In the event of a power failure, it takes about 15 seconds as well, until the spindle stops completely.

- When the machine interior and floor get wet with water
  If you operate the machine while its interior and floor are wet with water, you may receive an electric shock that could result in serious injury or death.
  If the machine gets wet with water, do not switch on the facility power supply until the wetted areas dry up. Likewise, if the floor gets wet with water, switch off the facility power supply and wipe the floor until it is entirely dry.

- Maintenance key storage
  The maintenance key is a key related to the interlock mechanism of this machine that is designed to release the power shutoff status of the drivers used to drive all the axes except the spindle, when the splash cover F is open.
  This key must be stored with due care by qualified maintenance personnel.
  When this key becomes necessary during machine operation, the associated key operations must be carried out with due care by the maintenance personnel.

WARNING

- Lock mechanism of the splash cover F
  While the machine power is turned ON, the splash cover F is locked only when the spindle is rotating.
  If the machine power is turned OFF during spindle rotation (by pressing EMO switch or due to power failure, etc), its lock status will be kept. In this case, the splash cover F will not open even when the machine is not powered.
  In case it becomes necessary to unlock the splash cover F when the machine power still cannot be restored, there is a need to release the cover lock cylinder.
  Operation of the machine with the cover lock released incurs great risk of damage to both the human body and machine. The maintenance of the machine left in this state must be performed with utmost care by the personnel qualified to engage in this work. Furthermore, during maintenance, no one other than the qualified maintenance personnel shall be allowed to touch the machine.
  (For the details on the workings of the interlock mechanism, refer to Section 5 of this chapter, [Interlock Mechanism]).

- Lock mechanism of the microscope section cover
  While the machine power is turned ON, the microscope section cover is locked only when the spindle is rotating and the X-axis is located at the place other than its origin position.
  If the machine power is turned OFF (by pressing EMO switch or due to power failure, etc) while the spindle is rotating and the X-axis is located at the place other than its origin position, its lock status will be kept. In this case, the microscope section cover will not open even when the machine is not powered.
  In case it becomes necessary to unlock the microscope section cover when the machine power still cannot be restored, there is a need to release the cover lock cylinder.
  Operation of the machine with the cover lock released incurs great risk of damage to both the human body and machine. The maintenance of the machine left in this state must be performed with utmost care by the personnel qualified to engage in this work. Furthermore, during maintenance, no one other than the qualified maintenance personnel shall be allowed to touch the machine.
  (For the details on the workings of the interlock mechanism, refer to Section 5 of this chapter, [Interlock Mechanism]).

- Touch-centering function
  The machine is equipped with the touch-centering function which actuates axes if you touch the touch panel while a microscope image is displayed on the screen. Therefore, if you place your hands or fingers in driving sections, they may be caught or cut off. Do not touch any axes while they are moving. Also, do not put your fingers or hands into any driven space.

WARNING

- Locking the circuit breaker lever
  If you perform maintenance of the machine with the power OFF, lock the circuit breaker lever with a padlock or by any other equivalent means in order to prevent the machine from operating unexpectedly when someone touches the breaker lever unknowingly or inadvertently. Lock the circuit breaker lever according to the following steps:
  1) Open the key box cover located at the front side of the machine. Turn OFF the main switch, and then take out the key.
  2) Turn the circuit breaker lever located at the rear side of the machine to the OFF position. Then, lock up the circuit breaker lever with a padlock or by any other equivalent means, in the way shown below.

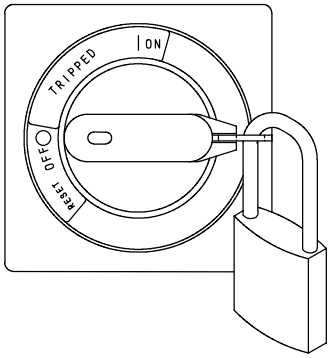

  3) The drawing below shows the circuit breaker that is locked when the cover on the circuit breaker section is removed.

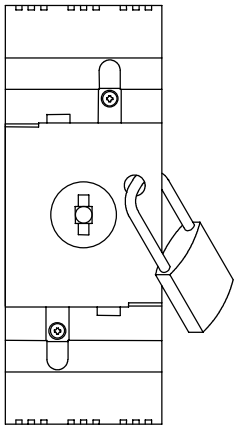

- ON/OFF of air supply when the machine is powered off
  Even when the machine itself is powered off, the air-driven sections may move when the air supply is switched on or off. If your hands or fingers are placed in any of these moving sections or spaces, they may be caught or cut off.
  Therefore, do not put your fingers or hands into any air-driven section or space when the air supply is switched on/off.

WARNING

- Emergency off (EMO) switch
  The power of this machine can be switched off by pressing the emergency off (EMO) switch. However, there are lines in the machine that are still energized with high voltage of dangerous level.
  Before starting maintenance, shut the main facility power supplied from the plant.

- Light source box section
  The halogen lamp in the light source box is heated when it is switched on. Direct contact with this heated lamp may be a cause of burn.
  Therefore, when there is a need to replace or work on the halogen lamp bulb for maintenance purpose, do so after waiting for at least 20 minutes from the time the power of the lamp is switched off.

- Regarding the machine equipped with UPS [optional accessory]
  When the facility power supply is shut off while the machine power is still switched on, the UPS (Uninterruptible Power Supply) will activate and maintain the internal power for 90 seconds. During this time, the line between the contact point where the facility power supply was shut off and the machine will remain energized with high voltage of dangerous level, and may become a cause of electric shock that could result in serious injury or death.
  Therefore, do not place your hands in the sections where the electric current is still flowing.

- Removal of broken workpiece and cleanup of the operation area
  If you try to remove the broken or shattered parts of the workpiece or clean up the operation area with bare hands, you may hurt your hands with these broken pieces that cut or stick to the fingers.
  Therefore, be sure to use tweezers to remove the broken pieces, and wear protective gloves and safety goggles to clean up the operation area.
  Moreover, make sure that all the axes have come to a complete stop before removing the broken pieces or cleaning the operation area.

- Touch panel
  In case a foreign matter (small piece of metal, water or any other liquid) gets in the touch panel, switch off the machine power and shut off the facility power supply immediately. Then contact your nearest Disco office. If you leave the touch panel as it is and continue using it, the foreign matter may become the cause of fire, electric shock or machine breakdown.

WARNING

- Operating the touch panel
  Do not press the touch panel display with too much force, or anything that is hard or that has a sharp tip, such as, a mechanical pencil or a screwdriver. The touch panel may break due to such rough handling.
  In case the panel display becomes damaged and the crystal liquid inside the panel adheres to your skin, immediately rinse it under running water for 15 minutes or more.
  If the crystal liquid gets in your eyes or mouth, immediately rinse it under running water for 15 minutes or more, and then consult your doctor.

- Tightening the lock bolt of flange
  If the lock bolt is tightened with a torque that is weaker than the required level, the bolt may loosen and come off. When the bolt comes off, the flange may fall off and become a potential source of damage to both the human body and machine.
  Therefore, be sure to apply the required level of torque to tighten the lock bolt for securing the flange in place.

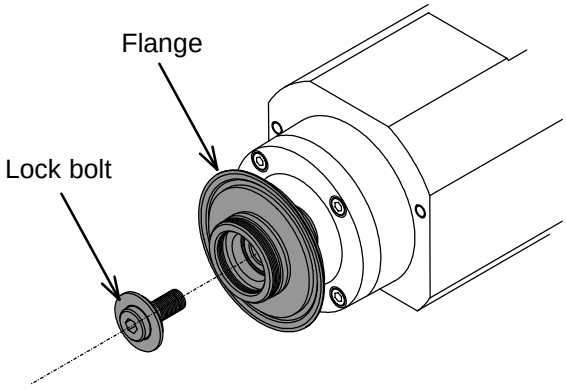

CAUTION

- Performing maintenance with the outer cover removed
  When the outer cover of the machine is removed for the purpose of maintenance, do not leave the removed cover standing against the machine. When the cover topples down due to the effect of an earthquake or other sources of vibration/impact, the maintenance personnel working near where the cover was placed may get hurt. Therefore, whenever you remove the outer cover for the purpose of maintenance, be sure to keep it at a place that is far enough from the maintenance work area.
- Extra power outlet provided inside the machine
  If any equipment other than the specified ancillary equipment is connected to the extra power outlet provided inside the machine, the power supplied to the machine may become insufficient or the machine may malfunction and become the potential cause of an accident.
  Therefore, be sure to use the extra power outlet for the specified ancillary equipment only.

CAUTION

- Restarting the machine
  Even in case there is a need to restart the machine soon after power off, be sure to wait for 1 minute or more before switching on its power again. The machine may become damaged if you fail to follow this instruction and try to restart it immediately after power off.
- Setup
  After replacing the blade, be sure to allow the spindle to idle for 10 minutes before performing the setup.
  Insufficient spindle idling time may become the cause of inconsistency in the setup positions.
  Moreover, in case of using a washer blade, conduct dressing (truing) after replacing the blade and perform the setup after the blade is properly rounded. If the setup is performed before the blade is properly rounded, the setup position used as the reference will become inaccurate, causing the workpiece cutting depth to be inconsistent.

CAUTION

- Spindle idling at the end of the daily operation
  The spindle used in this machine is actually lifted by air together with its axis. If the spindle is stopped and the air supply to the spindle axis is shut off right away at the end of operation for any given day, the particles of the workpiece produced during the cutting operation may enter the spindle section and become the cause of spindle seizure.
  Therefore, be sure to run the spindle idly for 5 to 15 minutes with the wheel coolant water running and then for 15 to 20 minutes by itself after stopping the supply of the wheel coolant water, before stopping the spindle at the end of the daily operation using this machine.
- Spindle seizure
  If the air supply is shut off during spindle rotation, the spindle may seize up. Therefore, be sure to shut off the air supply to the spindle after the spindle stops rotating.
- Attachment and removal of the flange/wheel mount
  The spindle may seize up as a result of the attachment or removal process of the flange or the wheel mount.
  To prevent this problem from occurring, make sure that the air is supplied to the spindle section.
  In the attachment and removal operation of the flange/wheel mount, apply force only to the spindle concentric direction (in Y-axis direction).
- Spindle free-run
  To prevent the spindle from free running, stop the spindle rotation before switching off the power.
- Mislaid tools and materials
  Make sure that no tools or materials are left inside the machine.
- Cleaning of the touch panel display
  When the touch panel display gets dirty, moisten a dry soft cloth with neutral detergent, and after wringing it well, wipe the surface of the display with this cloth.
  Do not use any organic solvent other than ethanol for cleaning. An organic solvent may become the cause of deterioration or discoloration.
- While the microscope section cover is kept open
  While the microscope section cover is kept open, if undue force is applied on the cover, the cover could be broken.
  Do not open the cover 95° or more (its opening limitation) .
  Also, do not apply any force in the direction other than the cover's opening and closing one.

CAUTION

- Height of the partition board of the splash cover
  A partition board to prevent the wheel coolant water and cutting particles from splashing or scattering outside is attached to the splash cover. The height of this partition board must be adjusted whenever the workpiece used for processing is changed to a type with a different thickness or the height of the jig table is changed. In case the partition board is left unadjusted in machine operation to process a workpiece of different thickness or that uses a jig table of new height setting, the workpiece and the table may come into contact and get damaged.
  Moreover, note that the higher the height of the partition board is, the greater the gap will be at the cutting section, which in turn will allow more wheel coolant water and cutting particles to splash or scatter outside and increase the risk of the machine from being damaged by them.
  The appropriate height of the partition board is approximately 2mm from the upper surface of the workpiece placed on the chuck table.

- Do not put anything on the top of the machine
  If something is put on the top surface of the machine, the cover could damage. Also, if something is put on the fan which is located on the top of the machine, temperature of the electric system will increase, which might lead to machine damage.
  Do not put anything on the top of the machine.
  In order to check the top surface of the machine, you may need to use a footstool. Before standing on a stool, secure it firmly in order to avoid falling accidents.

- When you try to replace the blade while air supply to the machine is stopped, the spindle may be damaged.
  Do not replace the blade while air supply is stopped. Also, before replacement, call up and display the BLADE REPLACEMENT screen [screen 4.1].
  Air supply will be stopped in the following cases:
  * When the main switch has been turned OFF.
  * When time has elapsed over the <Wait time for energy saving> specified on USER DEFINE DATA screen [screen 7.4].

NOTICE

- Abnormal machine operation
  In case the machine operates abnormally, ask the worker qualified to engage in maintenance (maintenance personnel) for troubleshooting, adjustment and/or repair.
- Precaution during operation and maintenance
  Allow no one to switch on/off the power, air or water supply while the machine is in operation or being serviced. Pay extra attention to this precaution if the machine shares the same facilities with other equipment.
- Powering off the related equipment
  In case there is a need to perform troubleshooting or repair the machine with its power switched off, be sure to switch off in advance the power of all the related devices and equipment electrically connected to this machine.
- Installation space
  In selecting the site to install this machine, there is a need to take into account of a free space of adequate size used for maintenance purposes. This maintenance space must normally be kept as an open area with nothing placed. For details on the maintenance space, refer to Installation Manual, Section A-3-1, [Installation Site].
- Locking out of the master valves of water and air
  If the master valve of water or air is opened by someone while maintenance personnel are working on the installation or maintenance operation, this could result in an accident or damage to the machine.
  Lock out the master valves of water and air before starting such operations, so that no other person inadvertently opens them.
- About safety goggles, protective gloves, stepstools, flashlights or alcohol
  Neither safety goggles, protective gloves, stepstools, flashlights nor alcohol, all of which are necessary for maintenance work, are not supplied with the machine. Use what are furnished in your factory or what comply with your factory's standards.

2. Inherently Hazardous Areas and Ways to Avoid Hazards

Summary of this section

This section describes the areas where mechanical hazards are inherent and the ways to avoid these hazards separated by type.

Section No.	Title
2-1	Inherently Hazardous Operation Areas and Ways to Avoid the Area-specific Hazards
2-2	Inherently Hazardous Maintenance Areas and Ways to Avoid the Area-specific Hazards

2-1. Inherently Hazardous Operation Areas and Ways to Avoid the Area-specific Hazards

Summary of this section

This section describes the areas where mechanical hazards related to operation are inherent and provides explanation on the methods to avoid these area-specific hazards separated by type.

Hazardous areas where fingers/hands may be amputated and ways to avoid this area-specific hazard

The particular areas of this machine where potential amputation hazard is inherent are as shown below. The following diagram shows the respective location of these hazardous areas and the table below the diagram describes the hazard-causing factors and the method to avoid this area-specific hazard.

Hazardous areas where your fingers/hands may be amputated

This machine is equipped with spindle axes that rotate at high speed.

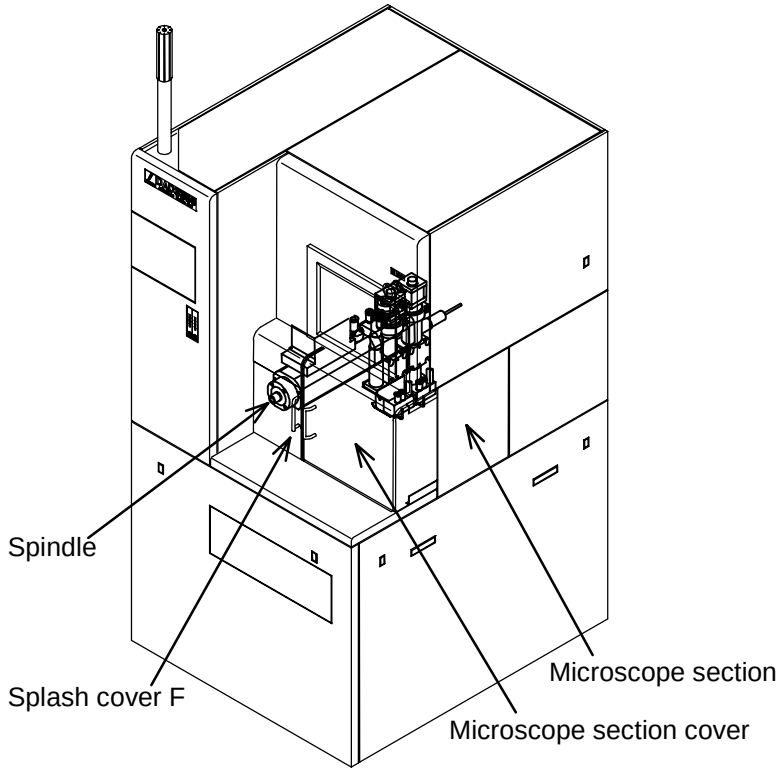

The safety interlock mechanism applied in this machine prevents the splash cover from opening while the spindles are rotating.
The microscope section cover has also an interlock mechanism so that it will not open while the spindles are rotating and the X-axis is located at the place other than its origin position.

Inherently hazardous area	Rotary spindle axes
Hazard-causing factors	There is a danger of your fingers or hands being amputated by the rotary spindle axes if you happen to place them inside this section while the spindles are rotating at high speed.
Method to avoid the hazard	It takes up to approximately 15 seconds for a rotating spindle to come to a complete stop (when it rotates at 60,000min^{-1} [60,000rpm]). Before opening the splash cover F or microscope section cover, wait at least 15 seconds until the spindles stop completely. And then visually make sure from outside the cover that the spindles have come to a complete stop.

Hazardous areas where fingers/hands may be caught or amputated and ways to avoid these area-specific hazards

This machine has following sections that involve potential hazards of caught or cut off by the machine. The location of hazardous sections and avoidance methods are as follows:

Hazardous areas where your fingers/hands may be caught or amputated

This machine houses various motor-driven sections such as X-axis section, Y-axis section, Z-axis section and θ-axis section.

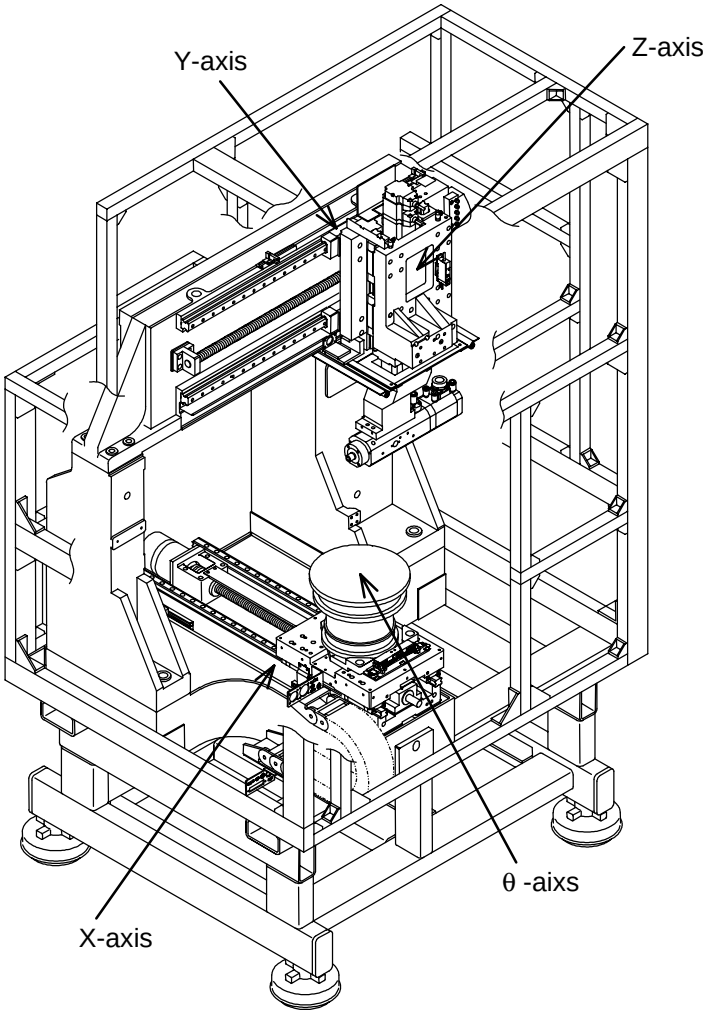

Motor-driven Sections	
Inherently hazardous areas	X-axis section, Y-axis section, Z-axis section, θ-axis section
Hazard-causing factors	There is a danger of your fingers or hands being caught or amputated in the motor-driven sections if you happen to place them inside any one of these sections while the machine is operating.
Method to avoid the hazard	For any operation that requires you to work inside or around any of these sections, be sure to confirm first that all the parts driven by the motor in the particular section have come to a complete stop.

2-2. Inherently Hazardous Maintenance Areas and Ways to Avoid the Area-specific Hazards

Summary of this section

This section describes the areas where mechanical hazards related to maintenance are inherent and provides explanation on the methods to avoid these area-specific hazards separated by type.

Hazardous areas behind the outer machine covers

Behind the outer covers of this machine are various internal areas with potential hazard of amputation, burn or electric shock.

Hazardous areas behind the outer machine covers

Behind the outer covers of this machine are various internal areas with potential hazard of amputation, burn or electric shock.

[1] Hazardous areas where fingers/hands may be caught or amputated

[2] Hazardous areas where you may get a burn

[3] Hazardous areas where you may get an electric shock

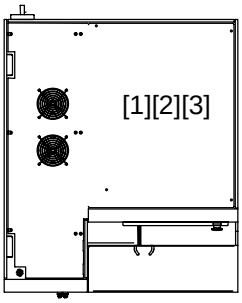

TOP

Hazardous areas behind the outer machine covers (Continued)

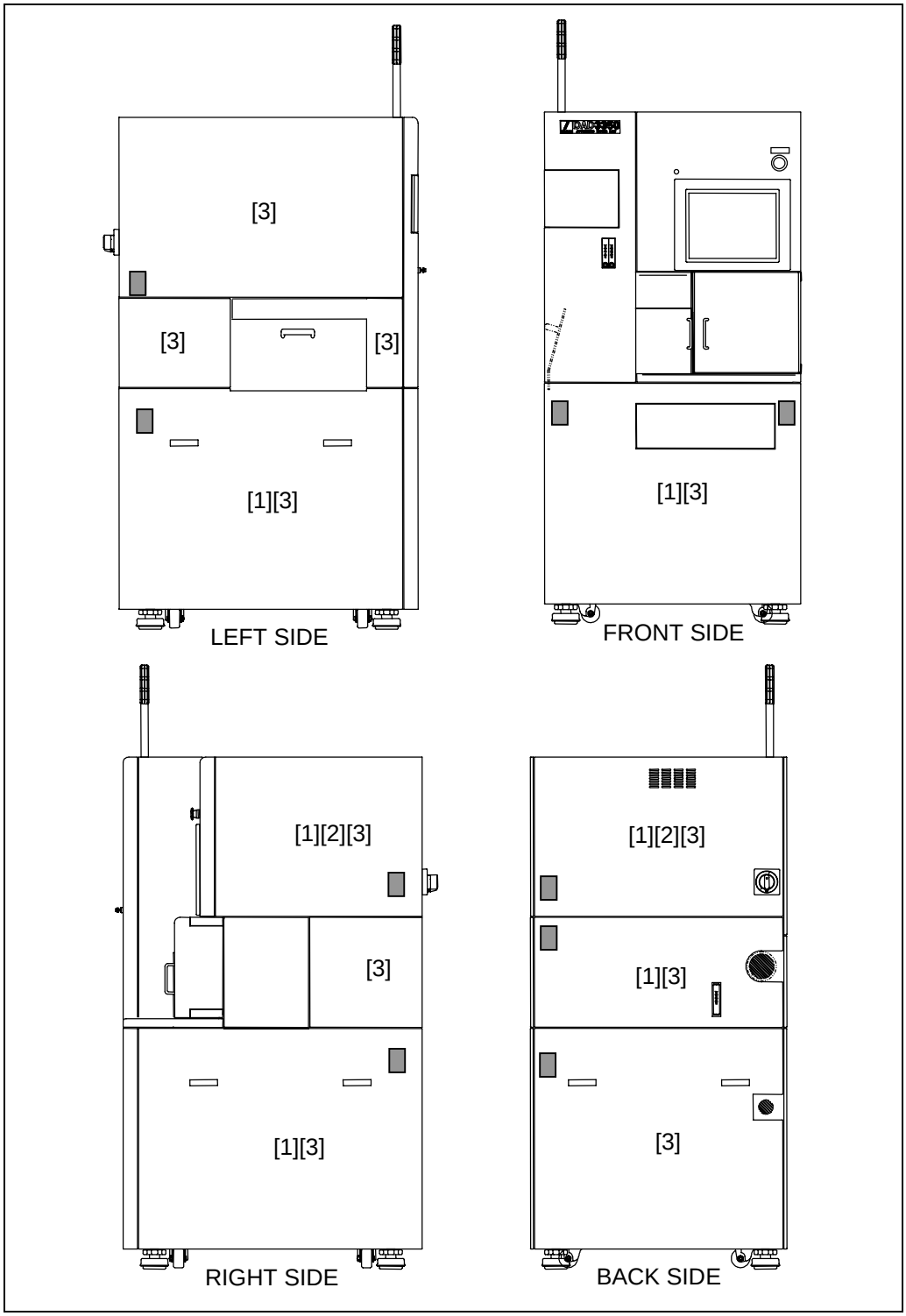

Hazardous areas with a potential of getting a burn and ways to avoid this area-specific hazard

The particular areas in this machine with a potential of getting a burn are as shown below. The following diagram shows the respective location of these hazardous areas and the table below the diagram describes the hazard-causing factors and the method to avoid this area-specific hazard.

Hazardous areas where you may get a burn

The maintenance personnel in charge of maintenance of the internal sections of this machine by removing the machine outer cover should be aware of the heat generating sections such as the microscope light source halogen lamp.

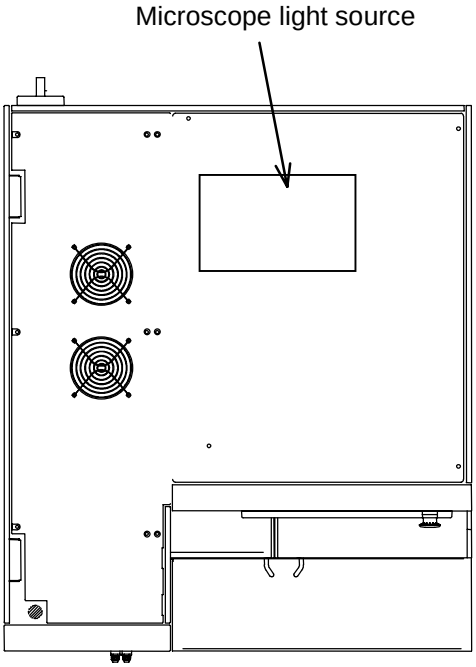

Top view

Inherently hazardous areas	- Microscope light source halogen lamp
Hazard-causing factors	Since the light source generates heat, you may get a burn if you come into contact with this heated area.
Method to avoid the hazard	Switch off the power of the machine and wait for the following time before starting the maintenance work. - 20 minutes or more for microscope light source halogen lamp

Hazardous areas inside the machine where fingers/hands may be caught or amputated and ways to avoid these area-specific hazards

The particular areas in this machine with a potential of fingers/hands getting caught or amputated are as shown below. The following diagram shows the respective location of these hazardous areas and the table below the diagram describes the hazard-causing factors and the method to avoid this area-specific hazard.

Hazardous areas where your fingers/hands may be caught or amputated

This machine houses various motor-driven sections that include: X-axis section, Y-axis section, Z-axis section, θ-axis section.

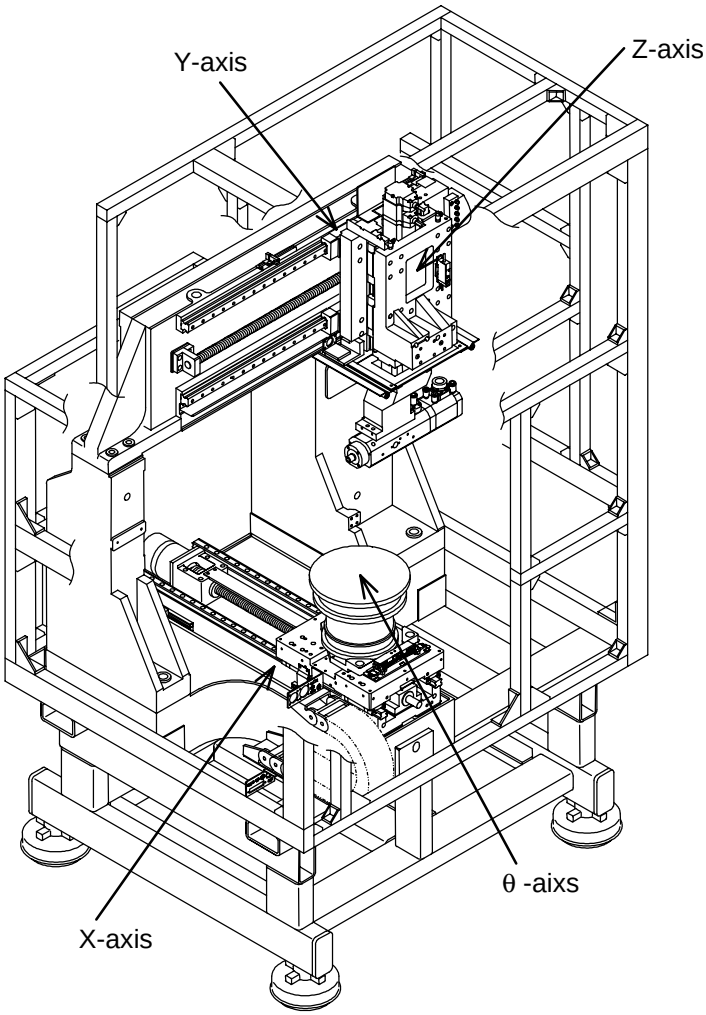

Hazardous areas inside the machine where fingers/hands may be caught or amputated and ways to avoid these area-specific hazards (Continued)

Motor-driven Sections	
Inherently hazardous areas	X-axis section, Y-axis section, Z-axis section, θ-axis section.
Hazard-causing factors	There is a danger of your fingers or hands being caught or amputated in the motor-driven sections if you happen to place them inside any one of these sections while the machine is operating.
Method to avoid the hazard	Any maintenance work with the machine outer cover open should be performed by maintenance personnel who have received maintenance training. Do not supply power or air to the machine during maintenance operation.

3. EMO Switch

WARNING

When the EMO switch is pressed, the machine will be powered off. However, some sections of the machine will still continue to receive electricity even after the EMO switch is pressed. By touching any of these energized sections, you may receive an electric shock that could result in serious injury or death.
Do not touch any of these sections that continue to receive electricity.

CAUTION

When the power circuit breaker is switched off while the spindle is rotating, the spindle will start to free-run. It takes up to approximately 15 seconds for a rotating spindle to come to a complete stop.
Do not shut off the air supply until the spindle stops its rotation completely.

About the EMO switch

EMO switch is an emergent hazard avoidance switch used when the machine falls into an abnormal condition or malfunctions during operation.

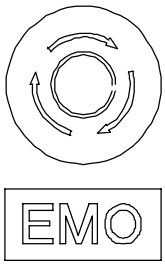

To activate EMO switch	Press the knob of the EMO switch.
To deactivate EMO switch	Turn the EMO switch knob clockwise (in the direction of the arrows). The switch will be deactivated when it pops up from the depressed position.
What will happen to machine power after EMO switch is pressed	When you press the EMO switch, the machine power will be switched off. If the EMO switch is pressed while the spindle is rotating, it will take up to approximately 15 seconds for the spindle to come to a complete stop. In this situation, the splash cover F will not open. If the EMO switch is pressed while the spindle is rotating and the X-axis is located at the place other than its origin position, the microscope section cover will not open, as well.

PC shutdown process after pressing the EMO switch	When the EMO switch is pressed, the PC will enter into the shutdown process according to the following procedure: 1. The PC will exit the application software. 2. <SHUTDOWN> dialog box will be displayed and the one-minute timer will activate. 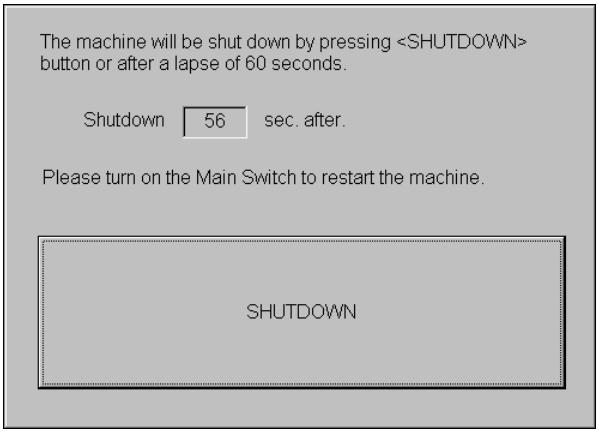 3. The PC will execute its shutdown process by either pressing the <SHUTDOWN> button within one minute, or after waiting one minute to elapse.
To restart the machine while <SHUTDOWN> dialog box is displayed	If the main switch is turned to ON position within one minute and EMO switch is released while the <SHUTDOWN> dialog box is displayed, the machine power will be turned on and the application software will be restarted.

EMO switch position

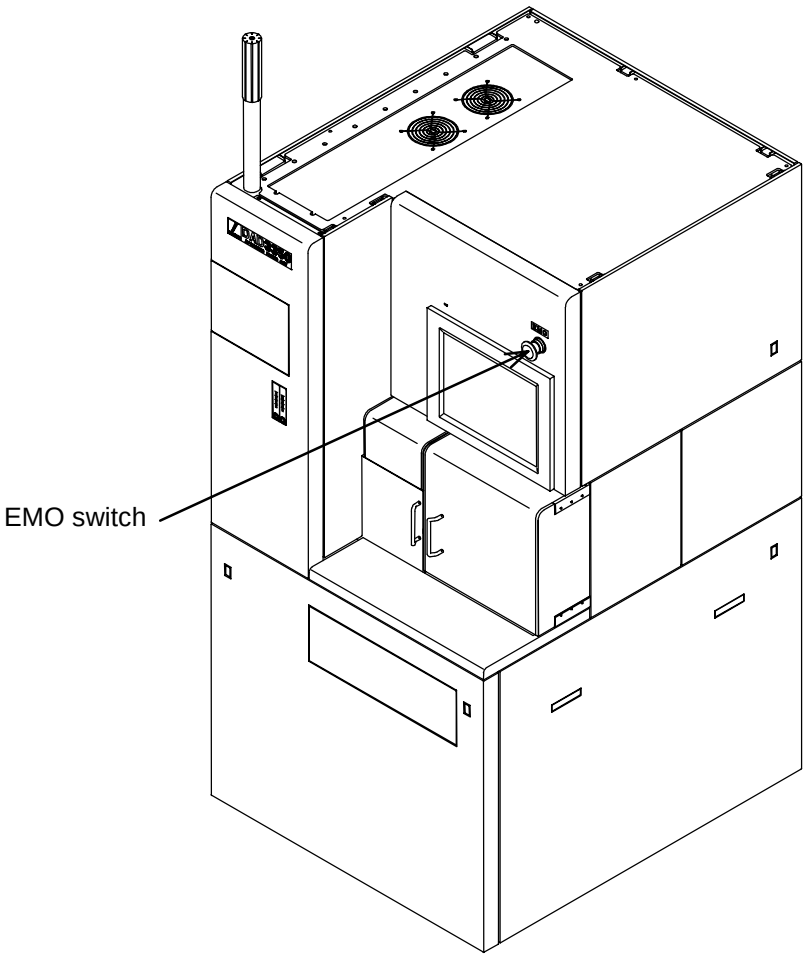

Lines that continue to receive electricity in the state of emergency stop

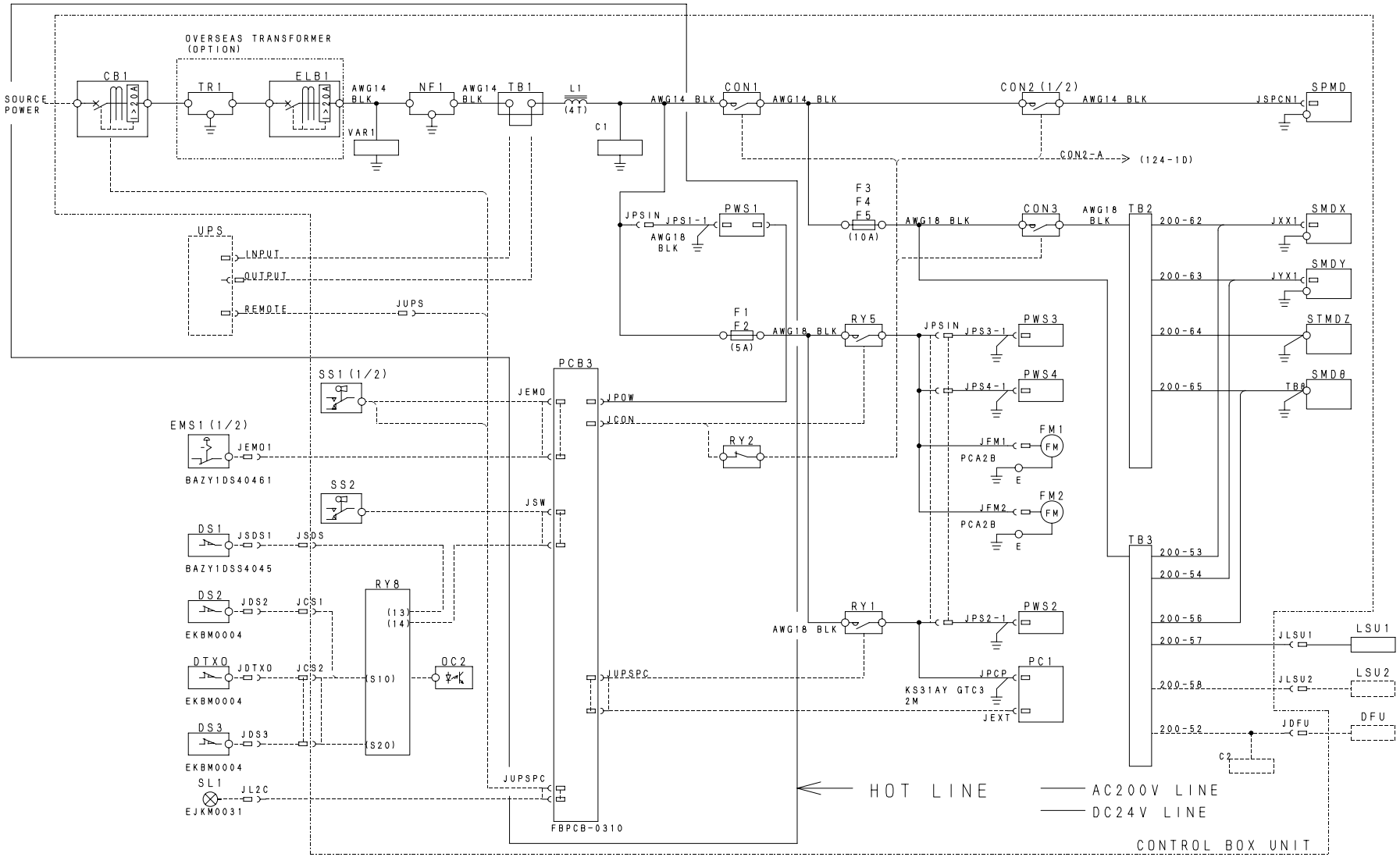

4. Power Circuit Breaker

Summary of this section

This section provides explanation on the power circuit breaker which is a device designed to shut off the power supplied to the machine automatically when an electric current exceeds the specified level flows into the machine.

Section No.	Title
4-1	About the Power Circuit Breaker
4-2	Electrical Ratings of the Power Circuit Breaker
4-3	Circuit Breaker Lever Lockout

4-1. About the Power Circuit Breaker

About the power circuit breaker

The power circuit breaker is a device that shuts off the power supplied to the machine automatically when an electric current exceeds the specified level flows into the machine.
When the power is supplied to the machine from the facility side, the power receiving indicator lamp on the machine will light up and continue to glow until the power supply stops.

Specifications of the power circuit breaker

The power circuit breaker classified as the standard specification type is the type that functions as an earth leakage breaker.

Name and meaning of each circuit breaker lever position

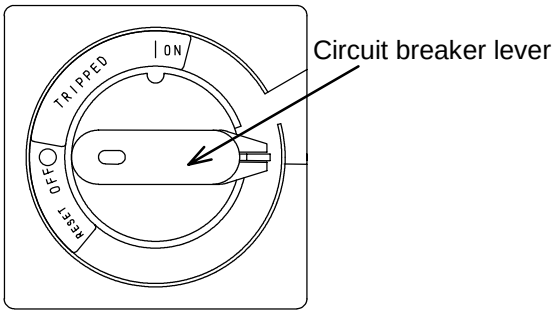

ON	Switches on the power.
TRIPPED	When an overcurrent load beyond the tolerable overload capacity is applied, the circuit breaker lever automatically moves to this position and switches off the power.
OFF	Switches off the power. The power can be switched back on by turning the circuit breaker lever to the ON position.
RESET	When the power is switched off due to overload (when the circuit breaker lever moves to the TRIPPED position), the power can be switched back on by turning the circuit breaker lever to this position first and then to the ON position.

Location of the power circuit breaker

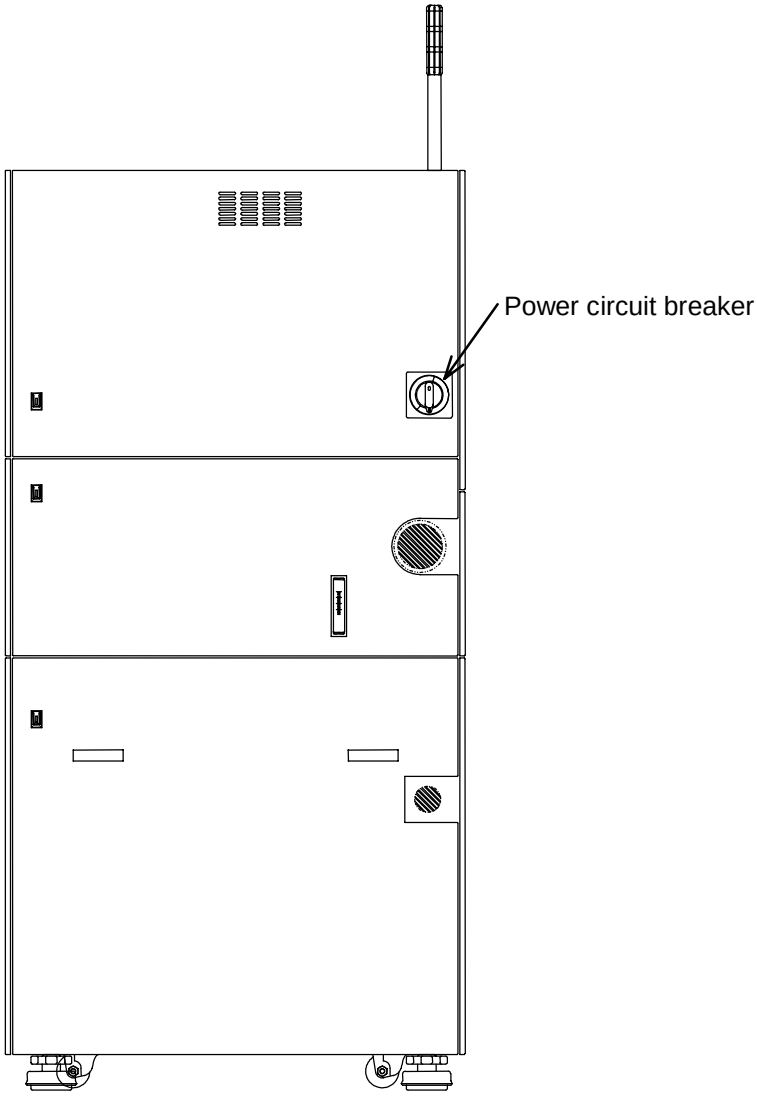

4-2. Electrical Ratings of the Power Circuit Breaker

Electrical ratings of the power circuit breaker

[Standard Specification type: Earth leakage breaker]

	Specifications	
AC supply system	3-phase, 3-wire	
Number of poles	3	
Rated current	1.8kW spindle spec: 20A	
Rated sensed current	30mA	
Rated breaking current	UL489	14kA (at AC240V)
	IEC60947-2 (lcu/lcs)	15kA/8kA (at AC230V)

[Transformer specification type: Circuit breaker (AC380V)]

	Specifications	
AC supply system	3-phase, 3-wire	
Number of poles	3	
Rated current	20A	
Breaking capacity	UL489	22kA (at AC480V)
	IEC60947-2 (lcu/lcs)	25kA/13kA (at AC440V)

4-3. Circuit Breaker Lever Lockout

Circuit breaker lever lockout

Before performing maintenance tasks with the machine power switched off, lock up the circuit breaker lever with a padlock or other equivalent means, to prevent anyone other than those in charge of the aforesaid maintenance tasks from touching the machine inadvertently and invoking unexpected operations.

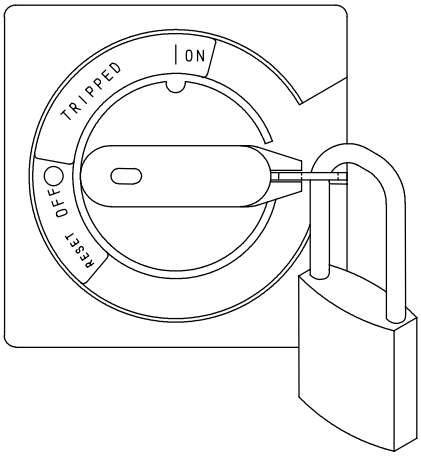

5. Interlock Mechanism

Summary of this section

This section provides explanation on the interlock mechanism incorporated in this machine in order to avoid potential hazards during machine operation.

WARNING

To ensure safe use of this machine, make sure to use the safety switches and lock cylinders. And be sure to have them adjusted properly so that they will function normally when they are used during machine operation.
The safety switches and lock cylinders used for this machine must be the types specified by Disco. Disco shall not be liable for any consequences arising from or incurred by the use of any other types of safety switch and lock cylinder.

Section No.	Title
5-1	About the Interlock Mechanism
5-2	Interlock Mechanism of the Splash Cover F/Microscope section cover
5-3	How to Release the Lock Cylinder
5-4	Interlock List

5-1. About the Interlock Mechanism

About the interlock mechanism

Interlock mechanism is a system incorporated in this machine to prevent hazardous events from occurring during machine operation.
This machine is equipped with the following interlock devices:

Section	Interlock devices incorporated in this machine	Function
Splash cover F	(1) Safety switch (2) Lock cylinder	Locks the splash cover F for safety assurance.
Microscope section cover	(3) Safety switch (4) Lock cylinder	Locks the microscope section cover for safety assurance.
Splash cover S	(5) Safety switch	Sensors the opening/closing of the splash cover S for safety assurance.
X-axis section	(6) Water leakage sensor [Optional accessory]	Detects water leakage around the X-axis section.

About the interlock mechanism (Continued)

The types of hazard detected by the interlock devices used in this machine are as categorized below:

Hazard Detector	Hazard Category	Hazardous Section	Hazard Level	What will Happen After Detection
Splash cover F (1) Safety switch (2) Lock cylinder	 Caught in machine Amputation	Spindle rotation X-axis movement Y-axis movement θ-axis rotation	[2]	X-, Y-, Z- and θ-axis, wheel coolant water and spindle rotation will stop immediately. *The splash cover F will not open during spindle rotation.
Microscope section cover (3) Safety switch (4) Lock cylinder	 Caught in machine Amputation	Spindle rotation X-axis movement Y-axis movement θ-axis rotation	[2]	X-, Y-, Z- and θ-axis, wheel coolant water and spindle rotation will stop immediately. *The microscope section cover will not open while the spindle is rotating and the X-axis is located at the position other than its origin position.
Splash cover S (5) Safety switch	 Caught in machine Amputation	Spindle rotation X-axis movement Y-axis movement	[2]	X-, Y-, Z- and θ-axis, wheel coolant water and spindle rotation will stop immediately. *If the splash cover S is disengaged, the machine cannot be operated.
X-axis section (6) Water leakage sensor [Optional accessory]	 Water leakage	Electrical shock caused by water leakage X-axis section	[2]	Z-axes will elevate. Wheel coolant water will stop flowing and the spindle will stop rotating. All the axes will stop and the machine will request for system initialization.

About the interlock mechanism (Continued)

Hazard levels are as defined below:

Hazard Level	Description
[1]	A situation extremely dangerous to human body has occurred (an imminently dangerous situation where the physical consequences incurred will very likely be either critically serious or fatal).
[2]	A situation considerably dangerous to human body has occurred (a very dangerous situation where the physical consequences incurred may be either serious or fatal in the worst case).
[3]	A situation dangerous to human body has occurred (a dangerous situation where the physical consequences incurred may be either light or of medium degree).

Where this machine's interlock devices are located

The following diagram shows where the interlock devices are attached to this machine.

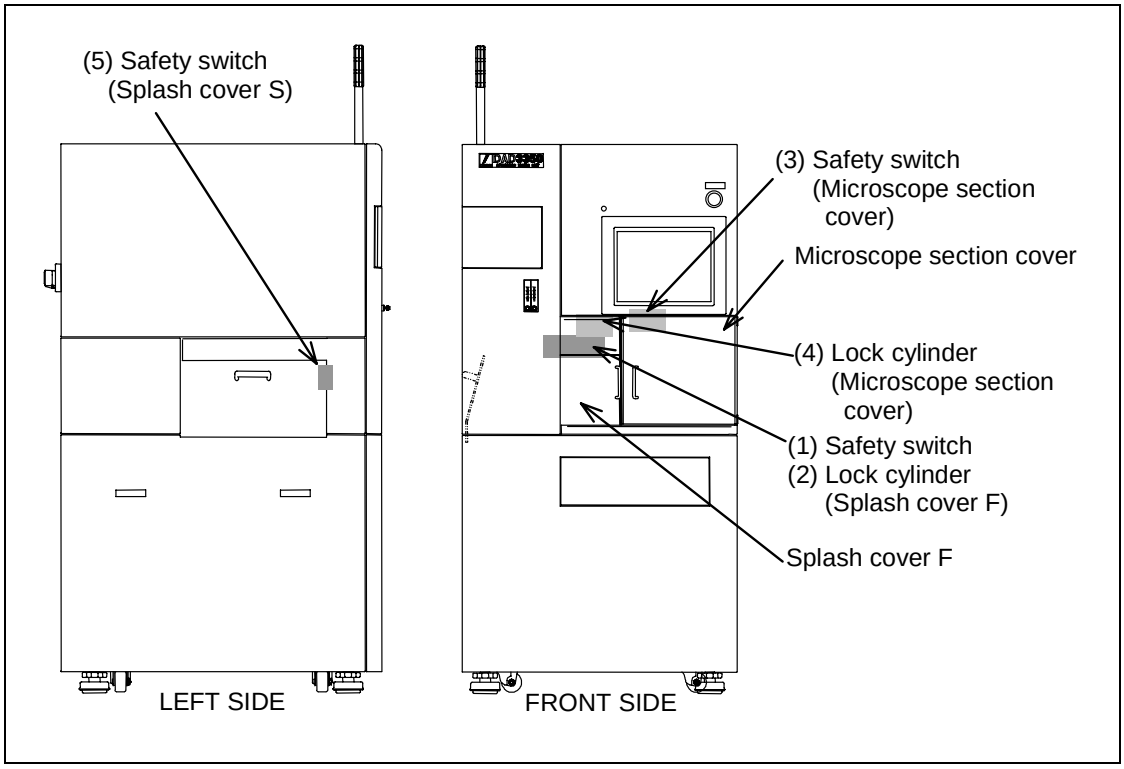

[X-axis section]

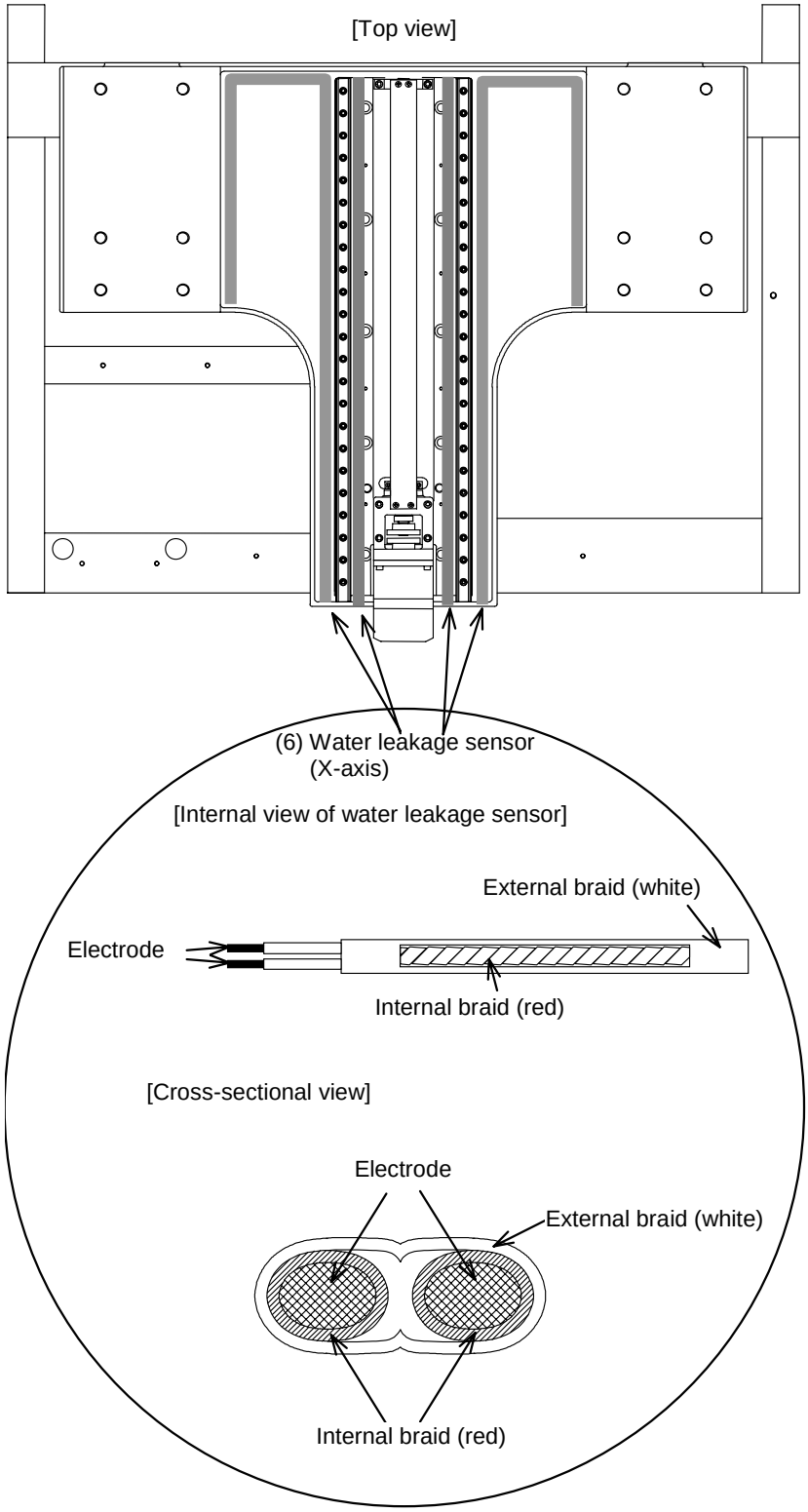

5-2. Interlock Mechanism of the Splash Cover F/ Microscope section cover

How the interlock mechanism of the splash cover F/microscope section cover works

The interlock mechanism of the splash cover F and microscope section cover works in the following ways:

Machine Condition	Workings of the Interlock Mechanism
When the spindle is rotating	When the spindle starts rotating, the lock cylinder of the splash cover F simultaneously actuates and prevents the cover from opening.
When the spindle is rotating and the X-axis is located at the position other than its origin position	The lock cylinder of the microscope section cover actuates and prevents the cover from opening
When the spindle is at a standstill	When the splash cover F is opened without using the maintenance key, all axial operations are disabled because the power supply to all axis drivers and spindle inverters are shut off.
When the machine power is turned off during spindle rotation due to emergency stop (EMO switch depressed) or power failure	As the locked status of the cover during spindle rotation is retained, the splash cover F will not open. If the X-axis is not located at the position other than its origin position, the microscope section cover will not open, as well. (If the machine is powered off after stopping the spindle according to the normal operation procedure, the cover will not be locked.)

How to release the lock of the splash cover F and microscope section cover

When the machine power is turned off (due to depression of EMO switch or power failure) while the spindle is rotating, the splash cover F will not open because its lock cylinder still works.
Likewise, when the machine power is turned off (due to depression of EMO switch or power failure) while the spindle is rotating and the X-axis is located at the position other than its origin position, the microscope section cover will not open because its lock cylinder still in action.
In case there is a need to open the splash cover F or microscope section cover to work on the internal parts located behind them, follow the procedure explained below.

WARNING

- It takes up to approximately 15 seconds for a rotating spindle to come to a complete stop.
  While the spindle is rotating, do not place your fingers or hands in the rotary section. In case you need to work in this section, be sure to confirm first that the spindle is not rotating.
- When the splash cover F or microscope section cover is opened without using the maintenance key, the power supply to all axis drivers and spindle inverters will be shut off but the machine is still powered. In this status, some parts of the machine are still energized.
  By touching any of these electrified sections, you may receive an electric shock that could result in serious injury or death.
  Therefore, do not place your hands in any of these sections that are receiving electricity.

CAUTION

When the power circuit breaker is switched off while a spindle is rotating, the spindle will start to free-run. It takes up to approximately 15 seconds for a rotating spindle to come to a complete stop.
Do not shut off the air supply until the spindle stops its rotation completely.

Step	Procedure
1	Turn on the power of the machine.
2	Open the splash cover F or microscope section cover.
3	Turn off the machine power.
4	Turn off the power circuit breaker and lock the circuit breaker lever with a padlock or any other equivalent means.

5-3. How to Release the Lock Cylinder

How to release the lock cylinder of the splash cover F/microscope section cover (in case the machine power is unrecoverable)

There may be times when it becomes necessary to open the locked splash cover F/microscope section cover but the machine, for some reason, cannot be restarted after it is powered off. In such cases, release the lock cylinder manually by following the procedure specified below.

CAUTION

When the outer cover of the machine is removed for the purpose of maintenance, do not leave the removed cover standing against the machine. When the cover topples down due to the effect of an earthquake or other sources of vibration/impact, the maintenance personnel working near where the cover was placed may get hurt. Therefore, whenever you remove the outer cover for the purpose of maintenance, be sure to keep it at a place that is far enough from the maintenance work area.

Step No.	Procedure
1	Turn the main switch to the [OFF] position and pull out the key.
2	Turn the lever of the power circuit breaker on the rear side of the machine to the [OFF] position, and lock the lever with a padlock or any other equivalent means.
3	Shut off the facility power supply.
4	Remove the cover [H]. Then store it sufficiently away from the working area. 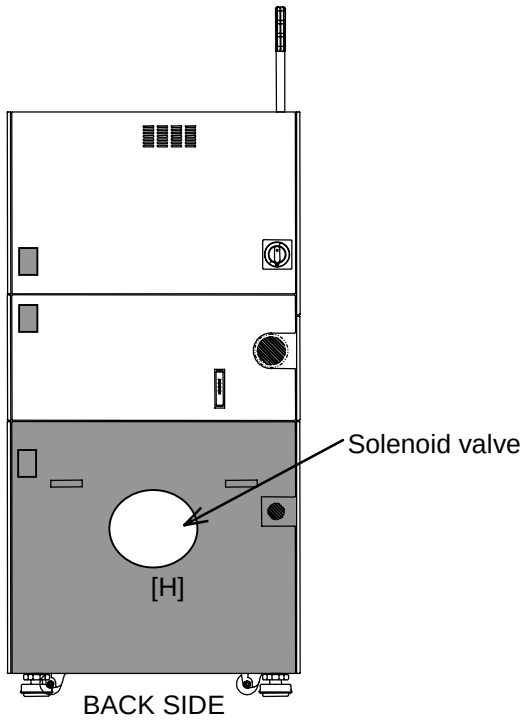

How to release the lock cylinder of the splash cover F/microscope section cover (in case the machine power is unrecoverable)

Step No.	Procedure
5	Press the release button of the solenoid valve (upper button). The lock cylinder will draw back and unlock the splash cover F/microscope section cover. (The lock will be released only when air is supplied to the machine at the time.) 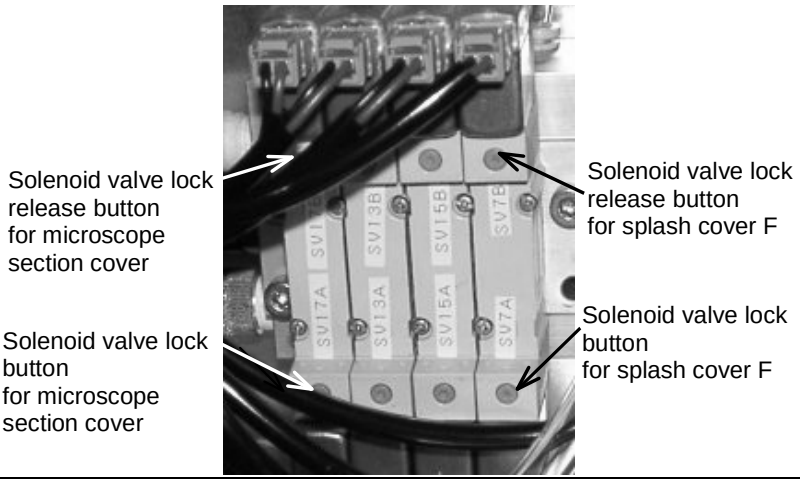
6	Open the splash cover F/microscope section cover and carry out the necessary maintenance work.
7	After completing the maintenance work, close the splash cover F/microscope section cover.
8	<u>To leave the lock cylinder unlocked:</u> Go to the step 10. (The lock cylinder will be locked automatically when the spindle is switched on after turning the machine power back on and initializing the system.) <u>To lock the lock cylinder manually:</u> Press the lock button of the solenoid valve (lower button). The lock cylinder will project out and lock the splash cover F/microscope section cover. (The cover will be locked only when air is supplied to the machine at the time.)
9	Make sure that the splash cover F/microscope section cover will not open.
10	Reinstall the cover [H].

How to release the interlock function with the maintenance key

In order to carry out conditioning or check the movement of the axes for maintenance purposes, there are times when it becomes necessary to move the axes while leaving the splash cover F/microscope section cover open.
In this case, you can manually move individual axes after deactivating the power shut-off feature of each axis driver, by using the maintenance key. And this deactivation can be made only when you do so on the FLANGE DRESSING screen [screen 7.1.1] or the AXIS OPERATION screen [screen 7.2]. Follow the procedures below to deactivate or restore the axis power shut-off feature.

- If the X-axis is located at its origin position, you can open the microscope section cover without using the maintenance key.

NOTICE

- If you open the splash cover F without rotating the maintenance key, you will not be able to manually move any axis.
  If you do so, you will have to initialize the system after closing the cover.
- If you open the microscope section cover without rotating the maintenance key, you cannot operate the X-axis. In order to operate the X-axis with the microscope section cover open, you have to first turn the maintenance key and open the microscope section cover. Then keeping the maintenance key rotated, operate the X-axis.
  If you open the microscope section cover without rotating the maintenance key and operate the X-axis, in an abnormal condition, the system initialization is required after you close the microscope section cover.

[Method of release]

Step No.	Procedure
1	Make sure that the spindle stops completely. - The splash cover F is normally locked and cannot be opened when the spindle is rotating. - The microscope section cover will not open when the spindle is rotating and the X-axis is located at the place other than its origin position.
2	Insert the maintenance key that is kept under control of the maintenance personnel into the maintenance switch.
3	With the maintenance key turned to the right (to OVERRIDE position), open the splash cover F or microscope section cover.
4	Release your hand from the maintenance key. The key will automatically return to its original position (COVER INTERLOCK position).
5	Perform the necessary maintenance tasks. - If you want to operate the X-axis with the microscope section cover open, while keeping the maintenance key rotated to the right (at the position of OVERRIDE), move the X-axis.

[Method of recovery]

Step No.	Procedure
1	After completing the maintenance tasks, close the splash cover F or microscope section cover. - When you close the splash cover F or microscope section cover, the interlock function will recover automatically.
2	Pull out the maintenance key from the maintenance switch.
3	Return the maintenance key to the maintenance personnel in charge of its safekeeping.

Position of the maintenance switch

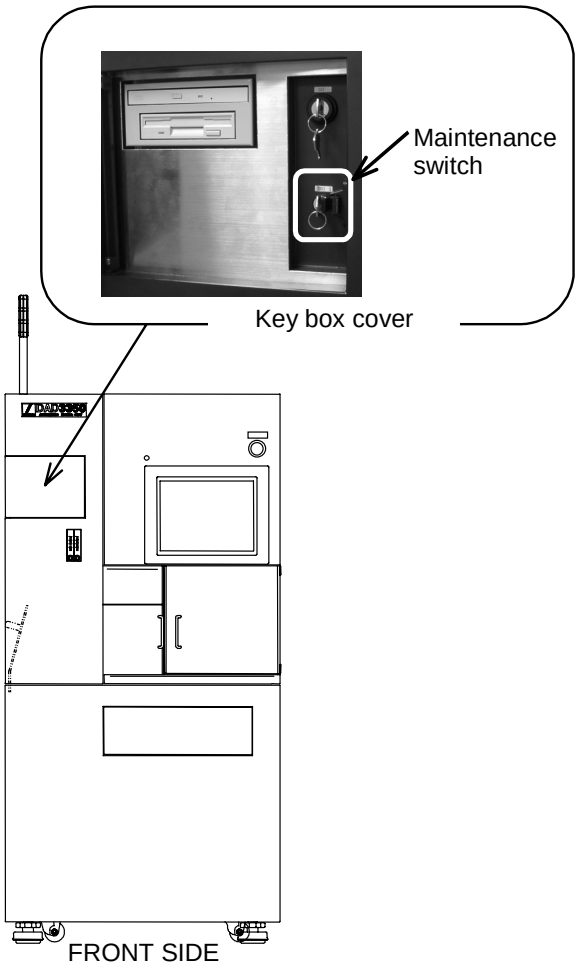

When the error of "E1206 : Interlock circuit is abnormal. Please restart the machine." occurs

The machine is equipped with a mechanism to monitor the interlock status. When this mechanism detects abnormality, an error occurs. After canceling the alarm, you have to turn the power back ON.
In this case, follow the procedures below to restart the machine.

Step No.	Procedure
Machine Action	The error "E1206 : Interlock circuit is abnormal. Please restart the machine." occurs.
1	Press the <Alarm/Clr> button to cancel the alarm.
2	Turn OFF the main switch.
3	Wait about one minute. Then turn the key to START position and release your hand from the key.
4	After about three minutes, MAIN MENU screen [screen 0.0] will be displayed on the monitor.
5	Press the <System Initial> button to effect system initialization.

5-4. Interlock List

About interlock list

The interlock lists of the following pages show the operation performed by the machine when an abnormality is detected by the interlock system and the hazard level of the abnormality.

*1 : All axes and cylinders come to a stop upon system initialization.
*2 : When there is no I/O number, the part number is indicated.
As regards the axis end sensors, the sensor label markings are indicated.
*3 : Hazard levels
H1 An impending hazardous situation which may result in death or serious injury.
H2 A potentially hazardous situation which could result in death or serious injury.
H3 A potentially hazardous situation which could result in minor or moderate injury.
*4 : The cover does not open during spindle rotation.

					Operation performed upon abnormality detection														Category			
	CODE	Error comment	I/O No. *2	Abnormality detection	1 Indication	2 Alarm	3 Axis power shutoff	4 Main power supply line shutoff	5 Spindle and wheel coolant supply OFF after Z-axis moving to upper end	6 Z-axis moving to upper end	7 Cutting operation stop after 1-line cutting	8 Spindle stop	9 X-axis stop	10 Y-axis stop	11 Z-axis stop	12 q-axis stop	13 Initialization request	14 Power-on reset request	15 Human safety (H) *3	16 Equipment safety (E)	17 Process safety (P)	Remarks
COVER	E0012	Splash cover opened.	DI022, DI042	Safety door switch			#		#			#	#	#	#	#			H2			*1,*4 Splash cover S has no lock mechanism.
	E0174	Microscope cover open error.	DI021	Safety door switch			#		#			#	#	#	#	#			H2			The axis power is cut off only when X-axis is located to the left of its origin position by 30mm or more.
	V0186	Unable to lock cover.	DI041	Proximity sensor	#	#																Before and after cutting
AIR	E0003	Insufficient main air.....Reinitialize.	EM3	Pressure sensor	#	#			#			#	#	#	#	#	#			E		

*1 : All axes and cylinders come to a stop upon system initialization.
*2 : When there is no I/O number, the part number is indicated.
As regards the axis end sensors, the sensor label markings are indicated.
*3 : Hazard levels
H1 An impending hazardous situation which may result in death or serious injury.
H2 A potentially hazardous situation which could result in death or serious injury.
H3 A potentially hazardous situation which could result in minor or moderate injury.
*4 : The cover does not open during spindle rotation.

					Operation performed upon abnomality detection														Category			
					1 Indication	2 Alarm	3 Axis power shutoff	4 Main power supply line shutoff	5 Spindle and wheel coolant supply OFF after Z-axis moving to upper end	6 Z-axis moving to upper end	7 Cutting operation stop after 1-line cutting	8 Spindle stop	9 X-axis stop	10 Y-axis stop	11 Z-axis stop	12 q-axis stop	13 Initialization request	14 Power-on reset request	15 Human safety (H) *3	16 Equipment safety (E)	17 Process safety (P)	
	CODE	Error comment	I/O No. *2	Abnormality detection																		Remarks
EM	E0002	EMO switch pressed	HW1B-V402R, EM2	Mushroom-shaped switch	#	#		#				#	#	#	#	#			H2	E	P	
	E0008	ZEM is activated.		Mounted on touch panel	#	#				#			#	#	#	#			H2	E	P	
SETUP	B0023	Spindle continuity error.		SETUPboard	#	#				#										E		
	B0026	Setup error (error detection.)		Software	#	#				#										E		
	B0028	Setup error (No detection.)		Software	#	#				#										E		

*1 : All axes and cylinders come to a stop upon system initialization.
*2 : When there is no I/O number, the part number is indicated.
As regards the axis end sensors, the sensor label markings are indicated.
*3 : Hazard levels
H1 An impending hazardous situation which may result in death or serious injury.
H2 A potentially hazardous situation which could result in death or serious injury.
H3 A potentially hazardous situation which could result in minor or moderate injury.
*4 : The cover does not open during spindle rotation.

	CODE	Error comment	I/O No. *2	Abnormality detection	Operation performed upon abnomality detection														Category			Remarks
					1 Indication	2 Alarm	3 Axis power shutoff	4 Main power supply line shutoff	5 Spindle and wheel coolant supply OFF after Z-axis moving to upper end	6 Z-axis moving to upper end	7 Cutting operation stop after 1-line cutting	8 Spindle stop	9 X-axis stop	10 Y-axis stop	11 Z-axis stop	12 q-axis stop	13 Initialization request	14 Power-on reset request	15 Human safety (H) *3	16 Equipment safety (E)	17 Process safety (P)	
MOTOR	E0004	Spindle inverter error. Re-start the machine		Spindle driver	#	#			#			#	#	#	#	#	#			E		
	V0517	Spindle rpm error		Spindle driver	#	#						#								E		
	X0050	X-axis unrecoverble error. Re-start the machine.		X- axis servo driver	#	#							#					#		E		*1
	X0051	X-axis unknown error.....Reinitialize		X- axis servo driver	#	#							#				#			E		*1
	X0052	X-axis servo error. Re-start the machine.		X- axis servo driver	#	#							#					#		E		*1
	X0053	X-axis CW end error.....Reinitialize.	End sensor DTXL	Photo interrupter	#	#							#				#			E		*1
	X0054	X-axis CCW end error.....Reinitialize.	End sensor DTXR	Photo interrupter	#	#							#				#			E		*1
	X0059	X-axis parameter error.....Reinitialize.		X- axis servo driver	#	#							#				#			E		*1
	X0060	Y-axis unrecoverable error. Re-start the machine.		Y-axis driver	#	#								#				#		E		*1
	X0061	Y-axis unknown error.....Reinitialize.		Y-axis driver	#	#								#			#			E		*1
	X0062	Y-axis servo error. Re-start the machine.		Y-axis driver	#	#								#				#		E		*1
	X0063	Y-axis CW end error.....Reinitialize	End sensor DTYF	Photo interrupter	#	#								#			#			E		*1
	X0064	Y-axis CCW end error.....Reinitialize.	End sensor DTYR	Photo interrupter	#	#								#			#			E		*1
	X0069	Y-axis parameter error.....Reinitialize.		Y-axis driver	#	#								#			#			E		*1
	X0070	Z-axis unrecoverble error. Re-start the machine		Z-axis stepping driver	#	#									#			#		E		*1
	X0071	Z-axis unknown error.....Reinitialize.		Z-axis stepping driver	#	#									#		#			E		*1
	X0072	Z-axis servo error. Re-start the machine.		Z-axis stepping driver	#	#									#			#		E		*1
	X0073	Z-axis CW end error.....Reinitialize.	End sensor DTZU	Photo interrupter	#	#									#		#			E		*1
	X0074	Z-axis CCW end error.....Reinitialize.	End sensor DTZD	Photo interrupter	#	#									#		#			E		*1
	X0077	Z-axis position error.....Reinitialize.		Z-axis stepping driver	#	#									#		#			E		*1
	X0079	Z-axis parameter error.....Reinitialize.		Z-axis stepping driver	#	#									#		#			E		*1
	X0080	Q-axis unrecoverble error. Re-start the machine.		Q-axis DD driver	#	#										#		#		E		*1
	X0081	Q-axis unknown error.....Reinitialize.		Q-axis DD driver	#	#										#	#			E		*1
	X0082	Q-axis servo error. Re-start the machine.		Q-axis DD driver	#	#										#		#		E		*1
	X0083	Q-axis CW end error.....Reinitialize.	End sensorDT q CW	Photo interrupter	#	#										#	#			E		*1
	X0084	Q-axis CCW end error.....Reinitialize.	End sensor DT q CCW	Photo interrupter	#	#										#	#			E		*1
	X0089	Q-axis vibration error.		Q-axis DD driver	#	#										#	#			E		*1

*1 : All axes and cylinders come to a stop upon system initialization.
*2 : When there is no I/O number, the part number is indicated.
As regards the axis end sensors, the sensor label markings are indicated.
*3 : Hazard levels
H1 An impending hazardous situation which may result in death or serious injury.
H2 A potentially hazardous situation which could result in death or serious injury.
H3 A potentially hazardous situation which could result in minor or moderate injury.
*4 : The cover does not open during spindle rotation.

	CODE	Error comment	I/O No. *2	Abnormality detection	Operation performed upon abnomality detection														Category			Remarks
					1 Indication	2 Alarm	3 Axis power shutoff	4 Main power supply line shutoff	5 Spindle and wheel coolant supply OFF after Z-axis moving to upper end	6 Z-axis moving to upper end	7 Cutting operation stop after 1-line cutting	8 Spindle stop	9 X-axis stop	10 Y-axis stop	11 Z-axis stop	12 q-axis stop	13 Initialization request	14 Power-on reset request	15 Human safety (H) *3	16 Equipment safety (E)	17 Process safety (P)	
OTHER	E0014	Temperature in the electrical box has increased.	DIN1	Temperature switch	#	#					#									E		
	E0018	Spindle cooling water flow error	DI011	Flow sensor	#	#			#			#	#	#	#	#				E		
	E0191	Internal communication error.		Software	#	#			#			#	#	#	#	#	#	#		E		
	E1206	Interlock circuit is abnormal.Please restart the machine.	DIN5	Safety relay	#		#											#	H2	E		

*1 : All axes and cylinders come to a stop upon system initialization.
*2 : When there is no I/O number, the part number is indicated.
As regards the axis end sensors, the sensor label markings are indicated.
*3 : Hazard levels
H1 An impending hazardous situation which may result in death or serious injury.
H2 A potentially hazardous situation which could result in death or serious injury.
H3 A potentially hazardous situation which could result in minor or moderate injury.
*4 : The cover does not open during spindle rotation.

	CODE	Error comment	I/O No. *2	Abnormality detection	Operation performed upon abnomality detection														Category			Remarks
					1 Indication	2 Alarm	3 Axis power shutoff	4 Main power supply line shutoff	5 Spindle and wheel coolant supply OFF after Z-axis moving to upper end	6 Z-axis moving to upper end	7 Cutting operation stop after 1-line cutting	8 Spindle stop	9 X-axis stop	10 Y-axis stop	11 Z-axis stop	12 q-axis stop	13 Initialization request	14 Power-on reset request	15 Human safety (H) *3	16 Equipment safety (E)	17 Process safety (P)	
OPTION	E0007	UPS has been actuated.	EM7	Unit internal circuit	#	#			#			#	#	#	#	#	#			E	P	UPS unit
	B0024	Non-Contact Setup check error.		Transmission sensor	#	#				#										E		Noncontact setup
	E0190	Water leakage detected.(X axis)	E0001	Water leakage sensor, 4-RI board	#	#			#			#	#	#	#	#	#			E		Water leakage sensor
	E0705	Cut water flow (BLD F) lower limit.		Flow controller	#	#			#			#	#	#	#	#				E		Controller for the Wheel Coolant Water Flow Rate
	E0711	Cut water flow (SHW) lower limit.		Flow controller	#	#			#			#	#	#	#	#				E		Controller for the Wheel Coolant Water Flow Rate
	E0714	Cut water flow (SP) lower limit.		Flow controller	#	#			#			#	#	#	#	#				E		Controller for the Wheel Coolant Water Flow Rate
	E0187	Cutting water flow error.(Blade)	DI122	Flow switch	#	#			#			#	#	#	#	#				E		Wheel Coolant (Blade Cooler) Flow Switch
	E0188	Cutting water flow error.(Shower)	DI121	Flow switch	#	#			#			#	#	#	#	#				E		Wheel Coolant (Shower) Flow Switch
	B0184	BBD blade detection error.(Partial blade breakage)		Transmission sensor	#	#				#			#	#	#	#				E		From 8.4 screen, you can select to stop operation after 1-line cut.
	B0185	BBD blade detection error.(Total blade breakage)		Transmission sensor	#	#				#			#	#	#	#				E		From 8.4 screen, you can select to stop operation after 1-line cut.

6. Safety Labels

About the safety labels

Safety labels are stickers affixed respectively to each inherently hazardous area of this machine to provide safety precautions and warnings on the potential hazard latent in each affixed area. The safety labels used for this machine are classified into the following types:

[Safety labels (Mark)]

Labels	Hazard Level	Meaning of Label
Rotary Blade Label 	 	It is possible that your hands or fingers may be cut by a rotating blade. Observe the following precautions for at least 15 seconds until the spindle comes to a complete stop: - Do not place your hands or fingers near the blade or flange. - Ensure that the cover is kept closed.
Driving Section Label 	 	It is possible that yours hands or fingers may be caught or injured by the driving section. While the power is ON, ensure that the cover is kept closed.
Electrical Shock Hazard Label 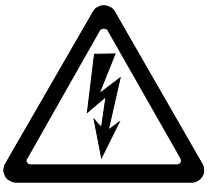	 	Use care to avoid possible electrical shock hazard.

[Safety labels (Message)]

Label	Description of the Hazard
CAUTION HIGH LEAKAGE CURRENT Earth Connection essential before connecting supply.	You may receive an electrical shock here. Make sure to establish a ground before connecting the power.

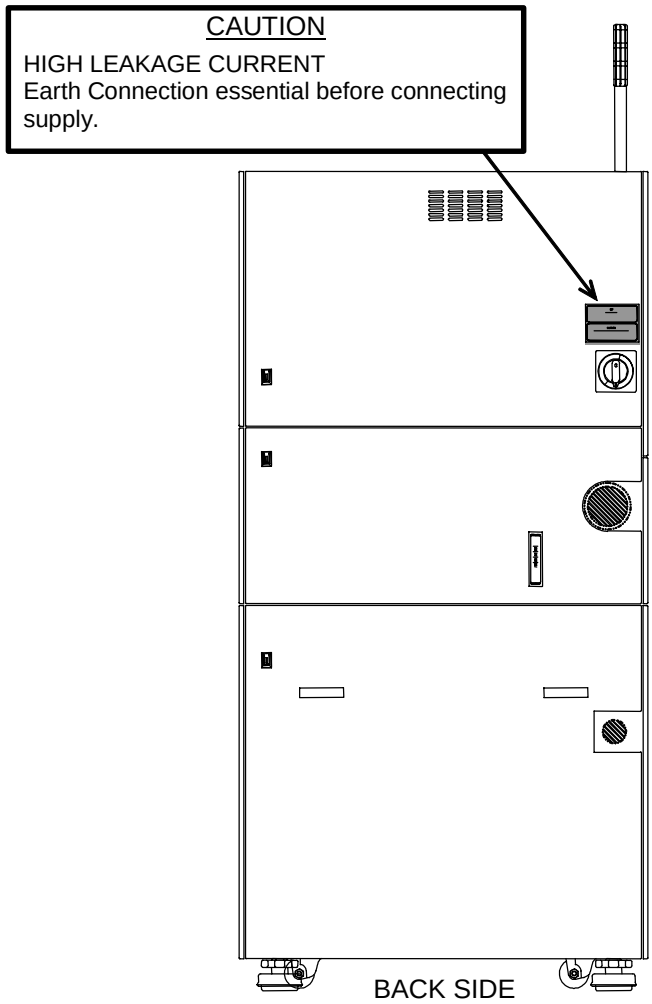

Rotary blade label position

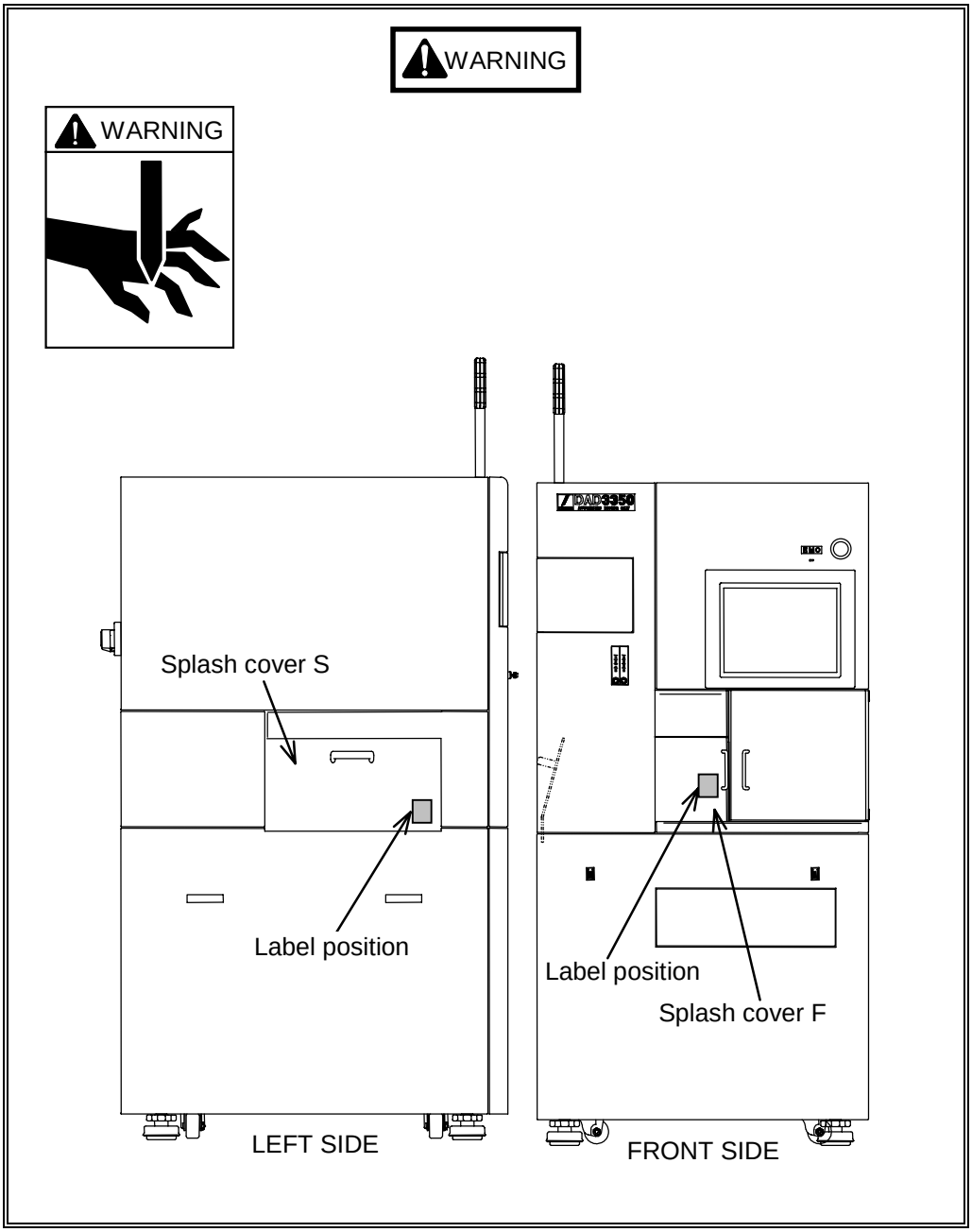

Drive section label position

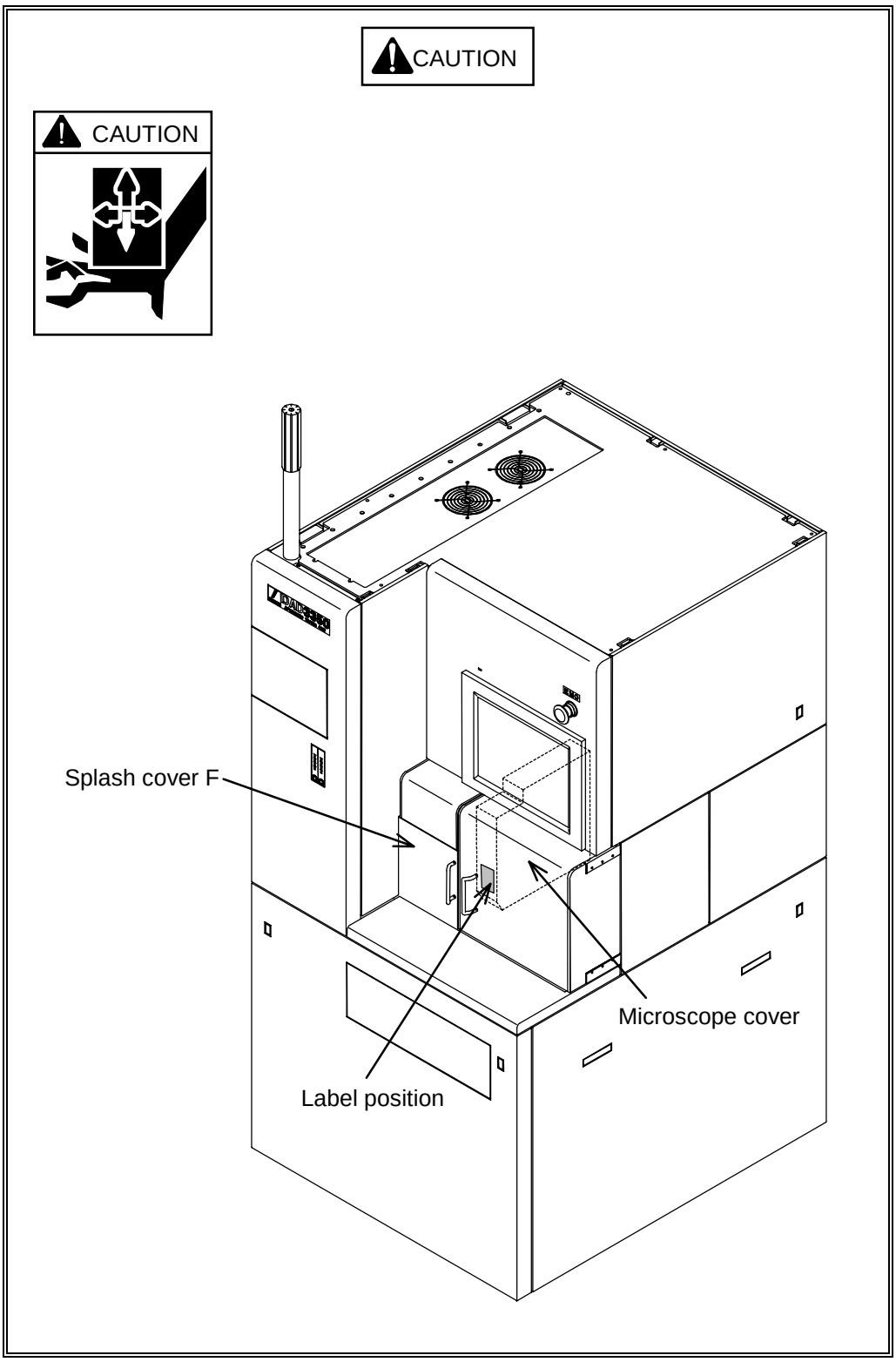

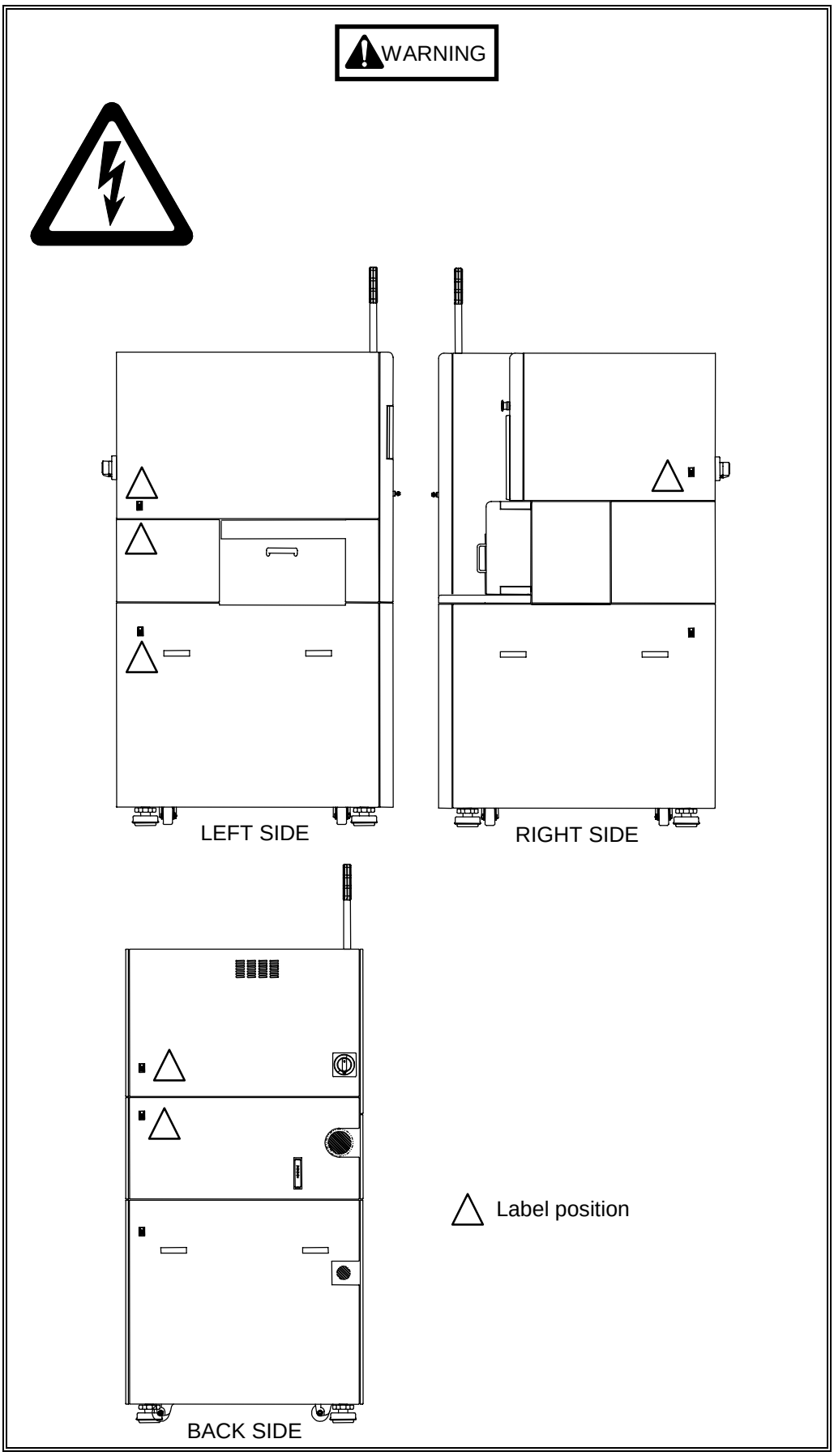
WARNING
LEFT SIDE
RIGHT SIDE
BACK SIDE
Label position

7. Critical Components List

Summary of this section

Critical components are parts and components adopted for use in this machine that are of critical importance to the safety of this machine. They are listed up in Critical Components List together with the following set of relevant information.

Information included in Critical Components List
Parts ID
Description
Maker
Type No.
DISCO Parts No.
Quantity

About replacement of critical components

Critical components must never be replaced without gaining prior consent from Disco.
Disco is not be liable for any consequences caused by the unauthorized replacement of critical components.

Parts ID	Description	Maker	Type No.	DISCO Parts No.	DAD3350 Quantity
ELB	Breaker (Leak Current)	Mitsubishi Electric	Type: NV50-SWU-3P-AX Current: 20A Leak Current: 30mA Pole: 3	AGEB020A-515	1
ELB	Handle (Breaker)	Mitsubishi Electric	Type: V05SWUF	AGX00000-514	1
SA	Surge Protector	Okaya Electric Industries	Type: RAV-781BXZ-4 Rated voltage: AC250V Sparkover voltage: 700V	BNRAV781BXZ4	1
NF1	Noise Filter	Soshin Electric co.,ltd	Type: NF3020A-VZ Current: 20A Insulation voltage: 2000V 1min	BNNF3020AVZ	1
C1	Capacitor	Soshin Electric co.,ltd	Type: LY3A103ML Rated voltage: AC250V Insulation voltage: 2000V 1min	BNLY3A103ML	1
TB1	Terminal Block	Sato Parts	Type:ML-20-5P Current:20A voltage:250V Insulation voltage:AC1500V/1min	ANML-20-5P	1
TB2, TB3	Terminal Block	Wago Japan	Type: 870-681	AN870-681	11
TB4, TB5, TB6	Terminal Block	Wago Japan	Type: 870-684	AN870-684	20
E2-*,E3-*	Terminal Block	Wago Japan	Type: 870-687	AN870-687	13
F1 - F5	Fuse Holder	Wago Japan	Type:281-611 Current: 10A Insulation voltage: 600V	AP281-611	5
OC1,OC2	PHOTO COUPLER	Wago Japan	Type:859-794 On-state Current: 100mA	SA859-794	2
CON1,CON2	Contactor (Magnetic)	Mitsubishi Electric	Type: SD-N21CXSA Coil voltage: 24V DC Contact Current(AC1): 32A Contact Current(AC3): 20A	AAMITB3D-023	2
CON3	Contactor (Magnetic)	Mitsubishi Electric	Type: SD-N12CXSA Coil voltage: 24V DC Contact Current(AC1): 20A Contact Current(AC3): 18A	AAMITB3Q-031	1
F1,F2	Fuse (Glass)	Littelfuse	Type: 215005 Current: 5A	AP215005	2
F3, F4,F5	Fuse (Glass)	Littelfuse	Type: 215010 Current: 10A	AP215010	3
FM1, FM2	Fan Motor	Oriental Motor	Type: MU1238A-42B Current: 0.12A	BFMU1238A42B	2
FMR,FML	Cable	Oriental Motor	Type: PC2AB	BFPCA2B	2
FM1, FM2	Fan Motor Cover	Nihon Servo	Type: F120UL	BFFG12D	4
PCB (SAFETY+PC)	PCB (Safety+PC)	Omron Takeo	Type: G9SA-505-DI	FBPCB-0310	1
RY8 (Safety Relay)	SAFETY RELAY	Izumi Denki	Type: HR1S-DMB1132 Voltage: 24V DC Contact current: 12A Safety Category: 4	BAHR1SDMB113	1
RY1,RY5	Relay (Control)	Omron	Type: LY3N-D Coil voltage: 24V DC Contact Current: 10A	ABLY3D-D3	2
RY2	Relay (Control)	Omron	Type: MY4N-D Coil voltage: 24V DC Contact Current: 3A	ABMY4-D-D3	1
RY3	Relay (Control)	Wago Japan	Type: 859-525 Coil voltage: 24V DC Contact Current: 5A	ALPYF14A	1

Critical component list (Continued)

Parts ID	Description	Maker	Type No.	DISCO Parts No.	DAD3350 Quantity
RY1,RY5	Relay Socket	Omron	Type: PTF11A	ALPTF11A	2
RY2	Relay Socket	Omron	Type: PYF14A	ALPYF14A	1
PWS1	Power Supply (Switching)	Cosel	Type: LEA75F-24 Input Current: 0.55A(AC200V) Output Voltage:24V Output Current:3.2A Insulation voltage: 3000V 1min	BDLEA75F-24	1
PWS2	Power Supply (Switching)	Cosel	Type: LEA50F-12 Input Current: 0.35A(AC200V) Output Voltage:12Vdc Output Current:4.3A Insulation voltage: 3000V 1min	BDLEA50F-12	1
PWS3	Power Supply (Switching)	Cosel	Type: LEB100F-0512-Y Input Current: 0.6A(AC200V) Output Voltage:5V/12V Output Current:5A/5A Insulation voltage: 3000V 1min	BDLEB100512 Y	1
PWS4	Power Supply (Switching)	Cosel	Type: LEP100F-24 Input Current:0.7A(AC200V) Output Voltage:24Vdc Output Current:4.2A Insulation voltage: 3000V 1min	BDLEP100F-24	1
PC	PC	Hitachi	Type: HJ-4020-NOSJA-DC01	BAHJ4020DC0 1	1
LGTU1 LGTU2 (Option)	Light Source Unit	Moritex	Type: DHF-S502B	BBDHF-S502B	1 Opt.1
SPMD	Driver (DCBL Motor)	Shinano Denki	Type: SE06-18W Motor Output: 1.8kW Current: 10.6A(AC)	BASE06-18WA	1
SPM	Spindle Motor	Shinano Denki	Type: SL 1.8kW Air Spindle Output: 1.8kW Current: 10.6A(AC)	NCP00072--A	1
SPMD	Driver (DCBL Motor)	Shinano Denki	Type: SE06-22W Motor Output: 2.2kW Current: 12.8A(AC)	BASE06-22WA	Opt.1
SPM	Spindle Motor	Shinano Denki	Type: SL 2.2kW Air Spindle Output: 2.2kW Current: 12.8(AC)	NCP00075	Opt.1
SMDX	Driver (AC Servo)	Panasonic	Type: MQDB045D1A04 Power source input: 200V Motor output: 400W	BAMQDB045D 04	1
SMDY	Driver (AC Servo)	Panasonic	Type: MQDB025D1A04 Power source input: 200V Motor output: 200W	BAMQDB025D 04	2
SMX	Servo Motor	Panasonic	Type: MQMA042C1C Current: 2.5A Rated output: 400W Isolation class: B	MOJTX002	1
SMY	Servo Motor	Panasonic	Type: MQMA022C1A Current: 1.6A Rated output: 200W Isolation class: B	MODRY231	2

Critical component list (Continued)

Parts ID	Description	Maker	Type No.	DISCO Parts No.	DAD3350 Quantity
SMD θ	Driver (Direct Drive Motor)	NSK	Type: M-ESB-SSB015A23F2 Power source input: 200V Rated output: 500W Insulation voltage:AC1800V/1min	BAMESBSB15A2	1
SM θ	Direct Drive Motor	NSK	Type: M-SSB015FN506 Insulation Class: F	MOJTRA16	1
STMDZ	Driver (Stepping Motor)	Asahi Engineering	Type: D3430 Current: 2A/Phass Power source input: 200V Insulation voltage:	BAD3040A	2
STMZ	Stepping Motor	Oriental Motor	Type: 103H7126-28E0 Current: 2A/Phase Insulation class: B Insulation voltage:	MOJKZA21	2
EMO1 (EMO Switch)	Switch (Push Button)	Izumi Denki	Type: HW1B-V402R Contact Current: 10A AC/DC Insulation voltage: 600V	AHHW1B-V402R	1
KEY1 (Power ON/OFF)	Switch (Key)	Izumi Denki	Type: HW1K-31B22N2 Contact Current: 10A Insulation voltage: 600V	AHHW1K31B22N	1
KEY2 (Maintenance)	Switch (Key Select)	Omron	Type: A165K-T2AL-1 Contact Current: 10A AC/DC Insulation voltage: 600V	AH165KT2AL1	1
DS1 (Safety Door Switch)	Safety Door Switch	Izumi Denki	Type: HS6B-02B01 Current(Amp): 2.5A Insulation voltage: 300V IP: 67	AFHS6B-02B01	1
DS2,3,DTXO	Safety Switch	Izumi Denki	Type: HS7A-DMP701 Current:100mA Insulation voltage: 300V IP: 67	AJHS7ADMP701	3
TAS	Thermal Read Switch	Tokin	Type: TRS5-045BLRU	RGTRS45BLRU	1
J**	Connector	Nanaboshi	Type: NJC**Serise, NJW**Serise	KBNNA**-***	n
J**	Other Connector	-	-	-	n
-	All Cables	-	-	-	n

DUCT FAN UNIT (Option)	Sirocco Fan	Oriental Motor	Type: MB1255-D Current: 0.8A (200V 60Hz)	MOKBN016	1
	Capacitor	Oriental Motor (Shizuki Erectric)	Type: CH20BFAUL (CMPS45B205UYF)	-	1

UPS (Option)	Uninterruptible Power Supply System	Daito Powertron	Type:DPU060	BADPU060	1

Critical component list (Continued)

Parts ID	Description	Maker	Type No.	DISCO Parts No.	DAD3350 Quantity
OVERSEAS TRNSFORMER (Option)	Transformer	Kasuga Electric	Type:DVT6930UTP42X Pri.: 380V Sec.: 200V Current: 6.93KVA Insulating class: H	ATDVT693UTP 4	1
	Braker (Circuit)	Mitsubishi Electric	Type: NF100-SWU-3P-AX Current: 20A Pole: 3	AGCB020A-503	1 380-415V
	Handle (Breaker)	Mitsubishi Electric	Type: V1SWUF	AGX00000-491	1 380-415V

ADDRESS LIST

JAPAN OFFICE ADDRESS

JAPAN

DISCO CORPORATION

Japan Head Office	14-3, Higashi Kojiya 2-chome Ota-ku, Tokyo 144-8650 Phone 81-3-3743-0111
Overseas Sales / PS Company	Phone 81-3-3743-5813 FAX 81-3-3743-5810
Osaka Branch Office	3-12, Nishi Nakajima 6-chome Yodogawa-ku, Osaka 532-0011 Phone 81-6-6302-4501 FAX 81-6-6302-0258
Kyushu Branch Office	16-14, Kamisuizenji 2-chome Kumamoto-shi 862-0951 Phone 81-96-385-3411 FAX 81-96-384-1410
Sendai Regional Office	2nd. Floor, Sendai Bldg. Ekimae-kan 1-17, Itsutsubashi 1-chome Aoba-ku, Sendai-shi, Miyagi 980-0022 Phone 81-22-262-3345 FAX 81-22-262-3346
Suwa Regional Office	3rd. Floor, Center Bldg. 12, Okita-machi, 3-chome Suwa-shi, Nagano 392-0013 Phone 81-266-52-0814 FAX 81-266-52-0815
Nagoya Regional Office	1st. Floor, Kitamura No.4 Bldg. 80, Akegaoka, Meito-ku Nagoya-shi, Aichi 465-0033 Phone 81-52-776-6350 FAX 81-52-776-6380

ASIA OFFICE ADDRESS

SINGAPORE

DISCO HI-TEC (SINGAPORE) PTE., LTD.

Blk 2 Kaki Bukit Ave 1
#03-06/08 Kaki Bukit Industrial Estate
Singapore 417938
Singapore
Phone 65-67473737
FAX 65-67450266

THAILAND

DISCO HI-TEC (THAILAND) CO., LTD.

16th Floor, Lao Peng Nguan Tower 1
333 Viphavadi-Rangsit Road
Lard Yao, Cnatuchak
Bangkok 10900, Thailand
Phone 66-2-6188441
FAX 66-2-6188440

MALAYSIA

DISCO HI-TEC (MALAYSIA) SDN. BHD.

21A Tingkat 1
Jalan USJ 10/1D UEP
47620 Subang Jaya
Selangor, Darul Ehsan, Malaysia
Phone 60-3-563-72606
FAX 60-3-563-72439

Penang Regional Office

1-02-01 Persiaran Bukit Jambul Satu
Kompleks Sri Relau
11900 Penang, Malaysia
Phone 60-4-644-5502
FAX 60-4-645-2285

PHILIPPINES

AUROTECH SYSTEMS (PHIL'S), INC.

121 Buencamino Street
Alabang, Muntinglupa
Philippines
Phone 63-2-809-0155
FAX 63-2-807-7419

KOREA

D.I CORPORATION

Disco Sales & Service Department	D.I Building 58-6, Nonhyun-Dong Kangnam-ku, Seoul, Korea Phone 82-2-546-5501 FAX 82-2-3446-8087

TAIWAN

HAPPY POLE, LTD.

Taipei Office	8F-1, No.41 Section 2, Roosevelt Road Taipei, Taiwan R. O. C. Phone 886-2-23960651 886-2-23960652 886-2-23966717 FAX 886-2-23943943
Kaohsiung Office	9598 6F-1, No.755 Jiangung Road Kaohsiung, Taiwan 807 R. O. C. Phone 886-7-3970598 FAX 886-7-3970362
Hsin Chu Office	No.4, Lane 7, Alley 452, Pao-Shan Road, Hsin Chu, Taiwan R.O.C. Phone 886-3-5798445, 886-3-5783394 FAX 886-3-5798442
Taichung Office	11th Floor, No. 276, Shengli Road Tantz Shiang, Taichung, Taiwan R.O.C. Phone 886-4-25317860 FAX 886-4-25344205

HONG KONG (CHINA)

NEW TRONICS CO., LTD.

Flat F, 11th Floor, Valiant Ind. Bldg.
2-12 Au Pui Wan Street, Fotan
Shatin, N.T., Hong Kong
Phone 852-26871431
FAX 852-26874283

INDIA

H. FILLUNGER & CO., PVT. LTD.

Post Box No.2526
11/4, Pusa Road
New Delhi 110 005
India
Phone 91-11-5787428
91-11-5726052
FAX 91-11-5762961

CHINA

DISCO TECHNOLOGY (SHANGHAI) CO., LTD.

4th Floor, Block A, FaZhan Mansion
No. 51 RiJing Road
WaiGaoQiao Free Trade Zone
Shanghai, P. R. China 200131
Phone 86-21-58662516
FAX 86-21-58662517

Beijing Service & Technical Support Center

No.3 Bei Tu Chne Xi Road
Chaoyang District
Beijing, P. R. China
Phone 86-10-62035406
FAX 86-10-62035406

Guangdong Service & Technical Support Center

12th Floor, Fengshen Mansion
No.2 Middle Xinfeng Road
Shijie Town, Dongguan
Guangdong, P. R. China
Phone 86-769-6334981
FAX 86-769-6334981

U.S.A. OFFICE ADDRESS

U.S.A.

DISCO HI-TEC AMERICA, INC.

USA Head Office	3270 Scott Blvd. Santa Clara, CA 95054-3011 U. S. A. Phone 1-408-987-3776 FAX 1-408-987-3785
Eastern Regional Sales & Service Office	360 Harvey Road, Building B, Unit 202 Manchester, NH 03103 U. S. A. Phone 1-603-656-9019 FAX 1-603-656-9018
Southeastern Regional Sales & Service Office	9104 Manassas Drive, Uite P Manassas Park, VA 20111 U. S. A. Phone 1-703-361-1312 FAX 1-703-361-1375
Central Regional Sales & Service Office	4392 Sunbelt Drive Addison, TX 75001 U. S. A. Phone 1-972-267-9500 FAX 1-972-267-5612
Southwestern Regional Sales & Service Office	4411 South 40th Street, Suite D-5 Phoenix, AZ 85040-2950 U. S. A. Phone 1-602-431-1412 FAX 1-602-431-1437
Northwest Regional Sales & Service Office	7931 SW Cirrus Drive Beaverton, OR 97008-5971 U. S. A. Phone 1-503-644-0323 FAX 1-503-643-8108

LYONS & ASSOCIATES

832 Bellevue Avenue
Hulmeville, PA 19047
U. S. A.
Phone 1-215-750-6346
FAX 1-215-752-3216
Territory in charge: PA, DE, MD, VA, WV

ROBERT ZUBOWICZ Z-TECHNOLOGIES, Inc.

1910 Buffalo Rd.
Titusville, FL 32796
U. S. A.
Phone 1-321-264-2002
FAX 1-321-264-0108
Cell 1-321-427-6809
Territory in charge: GA, AL, MS, FL

LYONS & ASSOCIATES

620 Swamp Road
Doylestown, PA 18901
U. S. A.
Phone 1-215-345-7915
FAX 1-215-345-8089
Territory in charge: NY, NJ

LYONS & ASSOCIATES

c/o Resources for Electronics
24577 Green Valley Parkway
Elkhart, IN 46517
U. S. A.
Phone 1-219-875-1133
FAX 1-219-875-6873
Territory in charge: WI, IL, IN (Area Code 219 only)
MI (Area Codes 517, 616 only)

LYONS & ASSOCIATES

c/o Resources for Electronics
7800 John Elwood Drive
Centerville, OH 45459
U. S. A.
Phone 1-937-434-4941
FAX 1-937-434-9445
Territory in charge: OH, KY,
IN (Except Area Code 219)
MI (Except Area Codes 517, 616)

JOHN CRANE & ASSOCIATES

PMB 147
34522 No. Scottsdale Road, D-8
Scottsdale, AZ 85262
U. S. A.
Phone 1-480-488-9898
FAX 1-480-488-9848
Territory in charge: Mexico (Central & East)

SEMITORR MIDWEST

19175 Market Avenue
Belle Plain, MN 56011
U. S. A.
Phone 1-612-873-2873
FAX 1-612-873-2327
Territory in charge: MN, IA, NE, ND, SD

UKE ENTERPRISES, Inc.

631 East Chapman Avenue
Orange, CA 92866
U. S. A.
Phone 1-714-633-0463
FAX 1-714-639-4359
Territory in charge: Southern CA (South of San Luis Obispo), Mexico (West)

UKE ENTERPRISES, Inc.

4200 Beacon Place
Byron, CA 94514
U. S. A.
Phone 1-925-240-5483
FAX 1-925-513-3442
Mobile phone 1-408-209-9681
Territory in charge: Northern CA

SALES & SERVICE

17853 Santiago Blvd.
Bldg. 107, Suite 333
Villa Park, CA 92861
U. S. A.
Phone 1-714-532-6500
FAX 1-714-532-6131
Territory in charge: ID

EUROPE OFFICE ADDRESS

GERMANY

DISCO HI-TEC EUROPE GmbH

Liebigstrasse 8
D-85551 Kirchheim b. Muenchen
Germany
Phone 49-89-90903-0
FAX 49-89-90903-199

FRANCE

DISCO HI-TEC FRANCE SARL

France Head Office

Espace Beauvalle-Bat. C
6, rue Mahatma Gandhi
F-13090 Aix-en-Provence
France
Phone 33-442910020
FAX 33-442910029

14-16, rue Leonard-de-Vinci
F-45074 Orleans Cedex 02
France
Phone 33-238493080
FAX 33-238493089

UNITED KINGDOM

DISCO HI-TEC UK LTD.

151 London Road
East Grinstead/West Sussex RH19 1ET
United Kingdom
Phone 44-1342-313165
FAX 44-1342-313177

ISRAEL

NEW TECHNOLOGY R.K. LTD.

3 Ben Gurion Street
P.O. Box 2227
Kfar-Azar 55000
Israel
Phone 972-3-6356650
FAX 972-3-6357750

IN AN EVENT OF AN ACCIDENT

Be sure to contact us

Immediately get in touch with the nearest DISCO or DISCO Service Office if a situation arises where an accident has occurred or might occur that involves injury or death during the operation of DISCO equipment.

Sales representative

Attach the business card of the DISCO sales representative you contact with, in the dotted lines below.

Attach the business card of your
DISCO sales representative.

All addresses are subject to change without notice.
The latest addresses are available in the internet.

DISCO home page http://www.disco.co.jp/