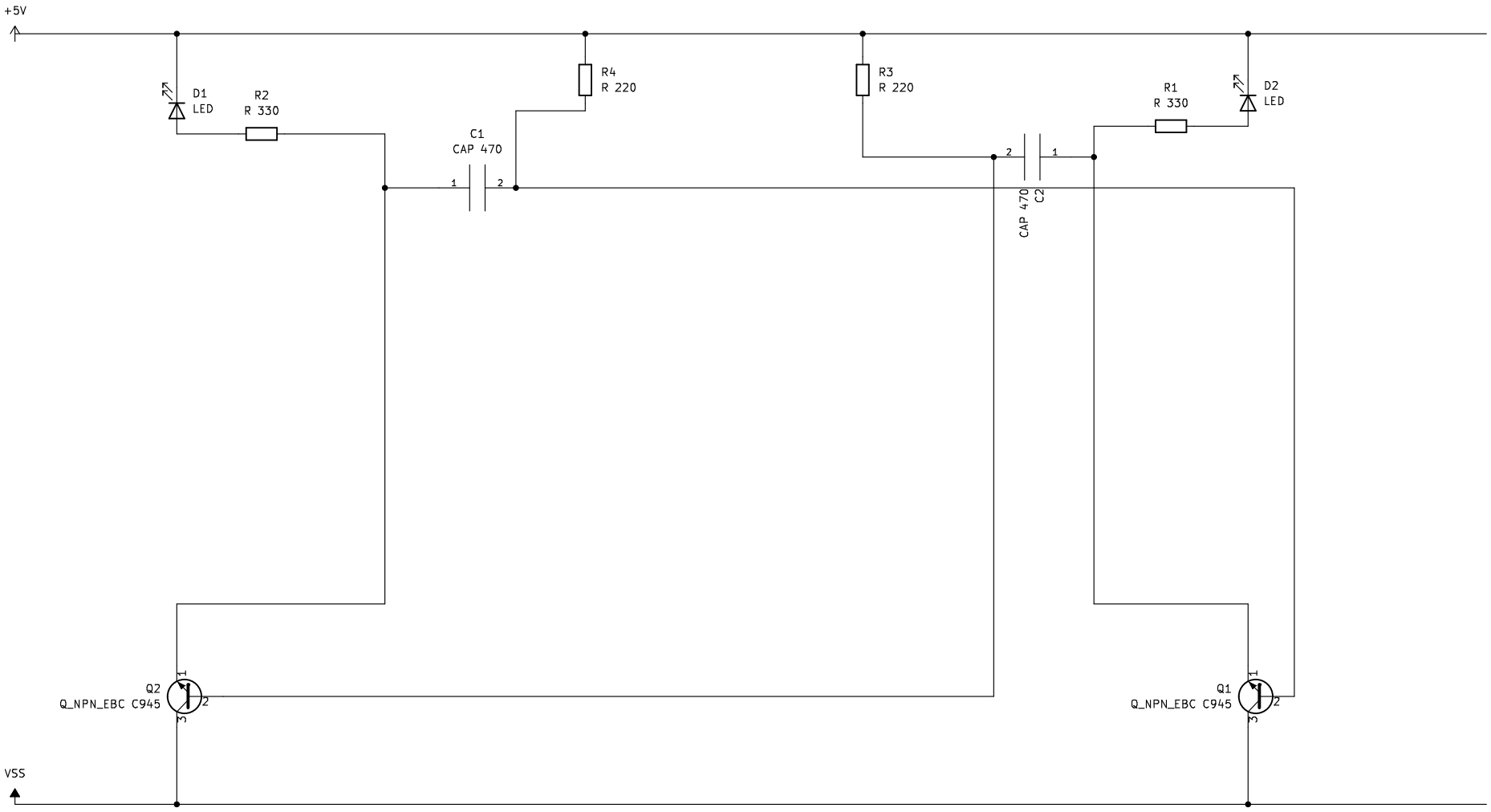

MASSIMO TROVATI

Sheet: /
File: 2ledblink.kicad_sch

Title: 2 LED BLINKING FAST

Size: A4	Date:	**Rev:**
KiCad E.D.A. kicad 6.0.7+dfsg-1build1		Id: 1/1