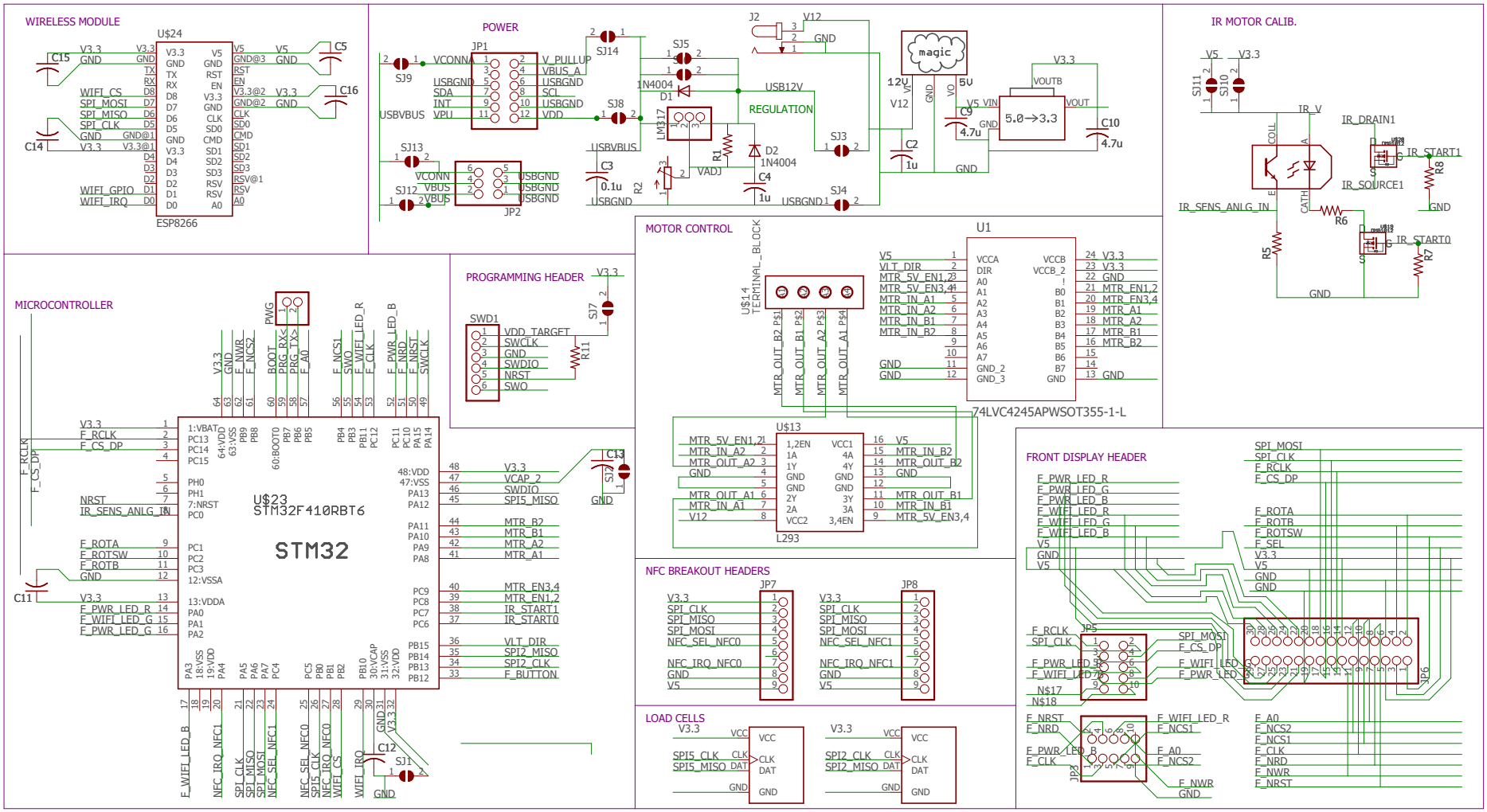

10/13/2017 12:11 PM f=0.71 V:\PCB_Design\mother_card_08.sch (Sheet: 1/1)