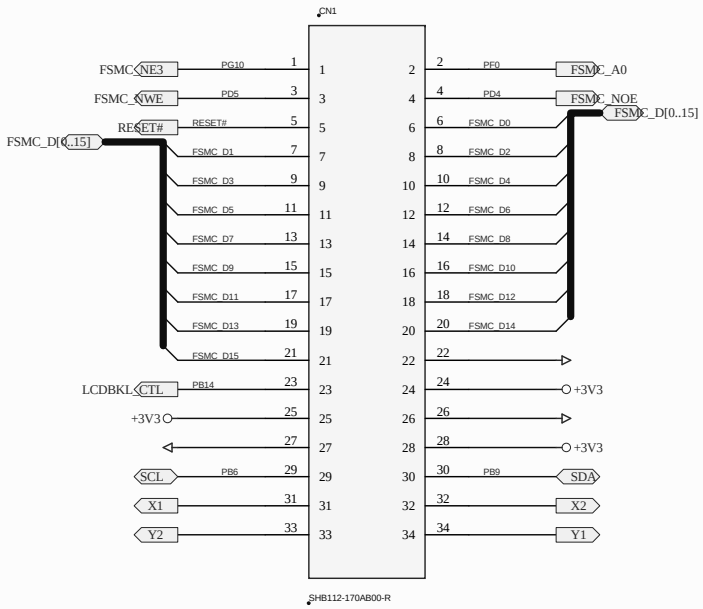

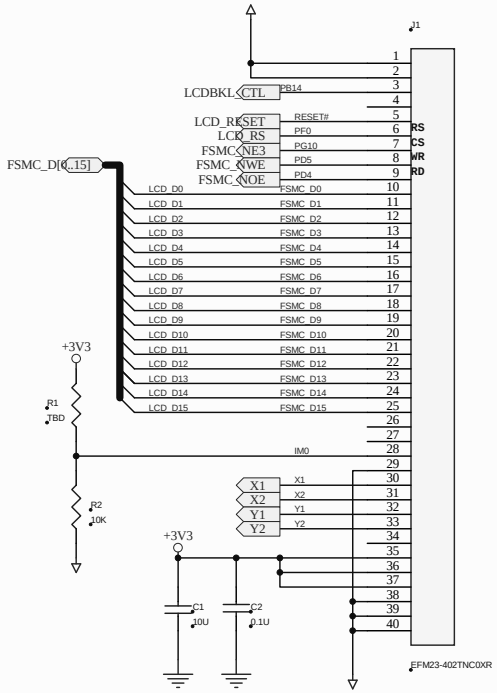

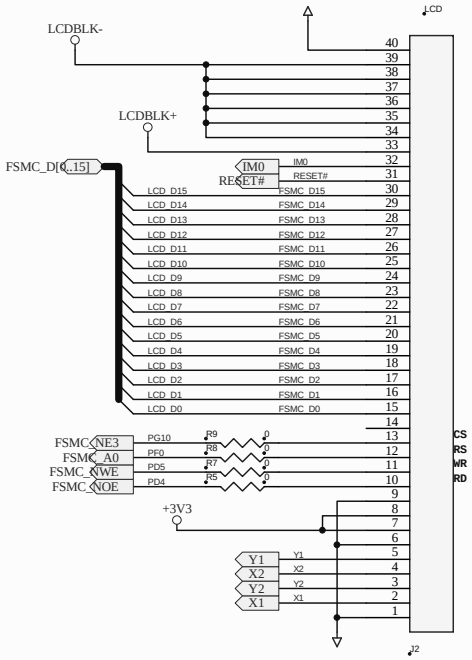

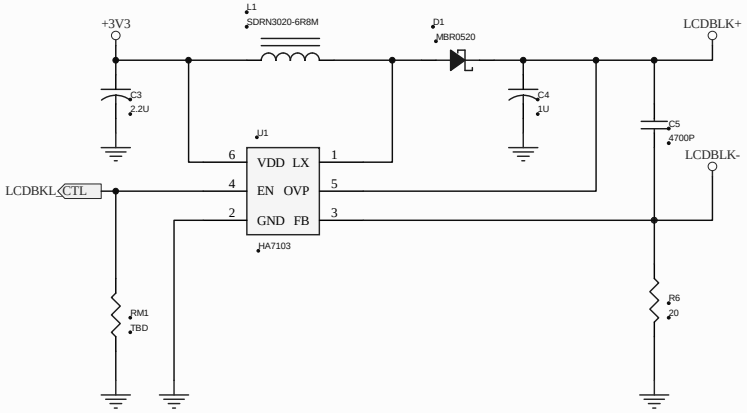

Title		
Size A	Document Number	Rev
Date:	Sheet 1 of 1	