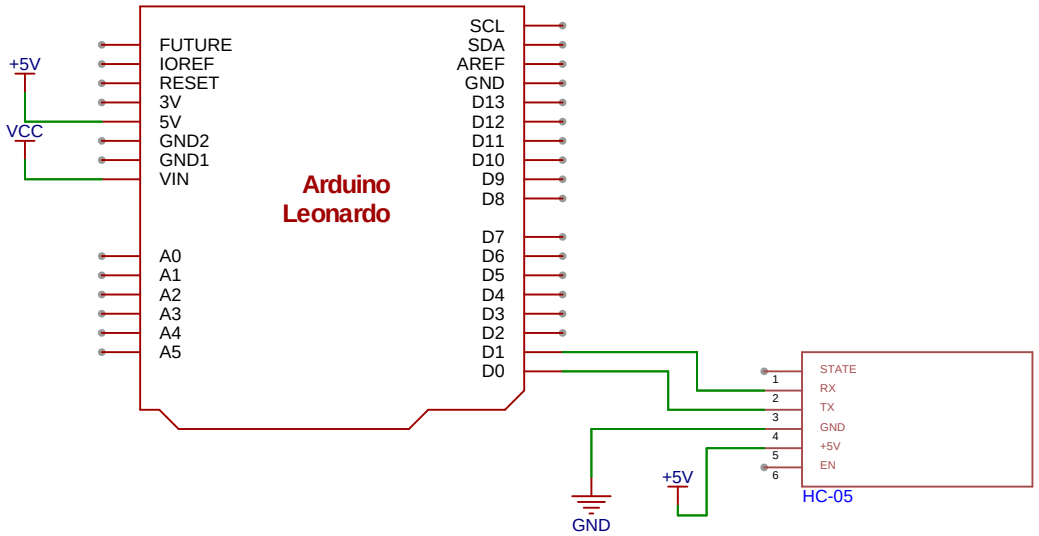

Schematic	Schematic1	Create at	2025-10-17
		Update at	2025-10-17
Board	Board1	Page	P4
Drawn		line Follower	
Reviewed			
		Version	Size	Page 4 Total 4
EasyEDA		V1.0	A4	EasyEDA.com