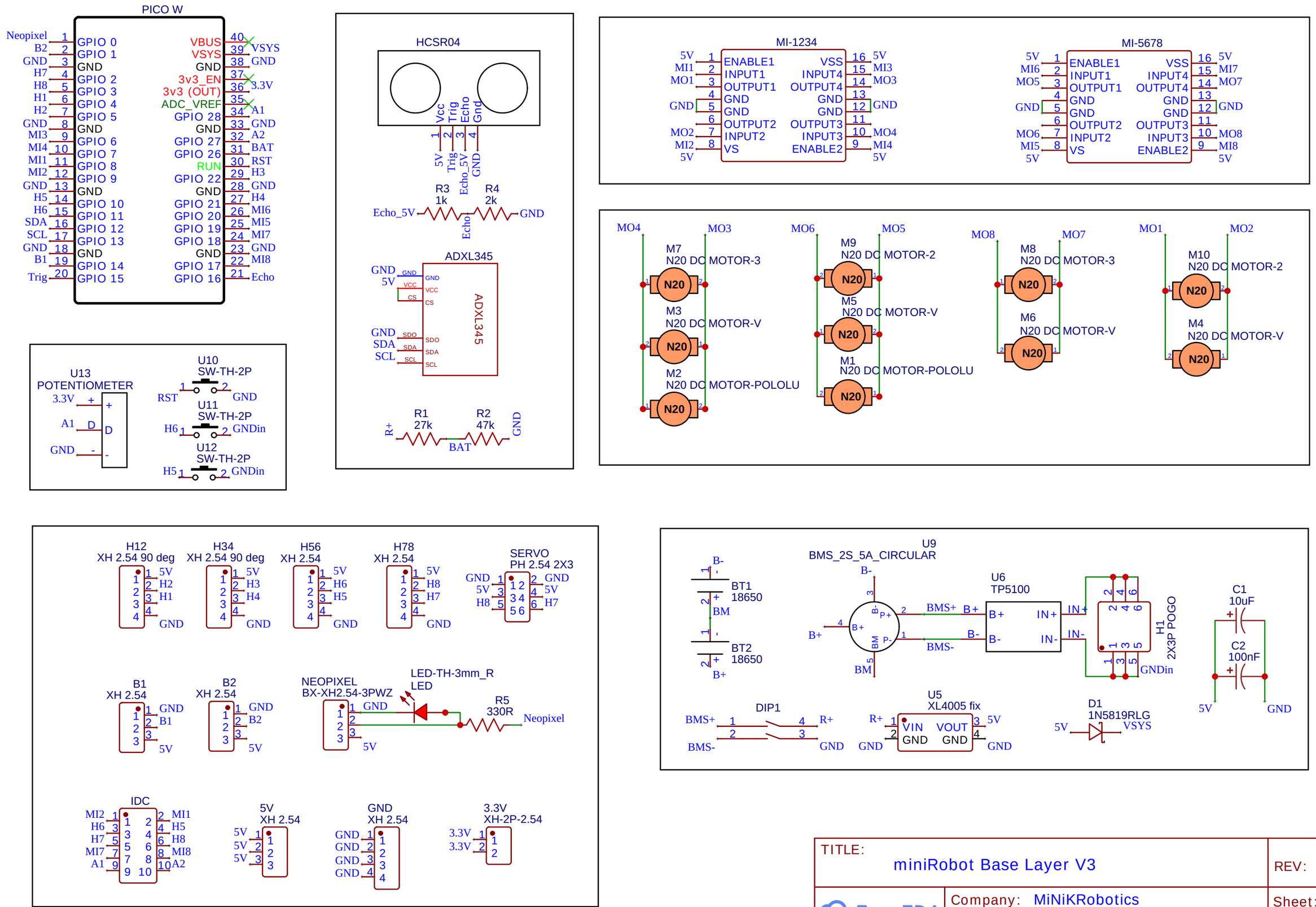

TITLE: miniRobot Base Layer V3	REV: 1.0
EasyEDA — Company: MiNiKRobotics	Sheet: 1/1
Date: 2024-03-28	Drawn By: rustem sevik