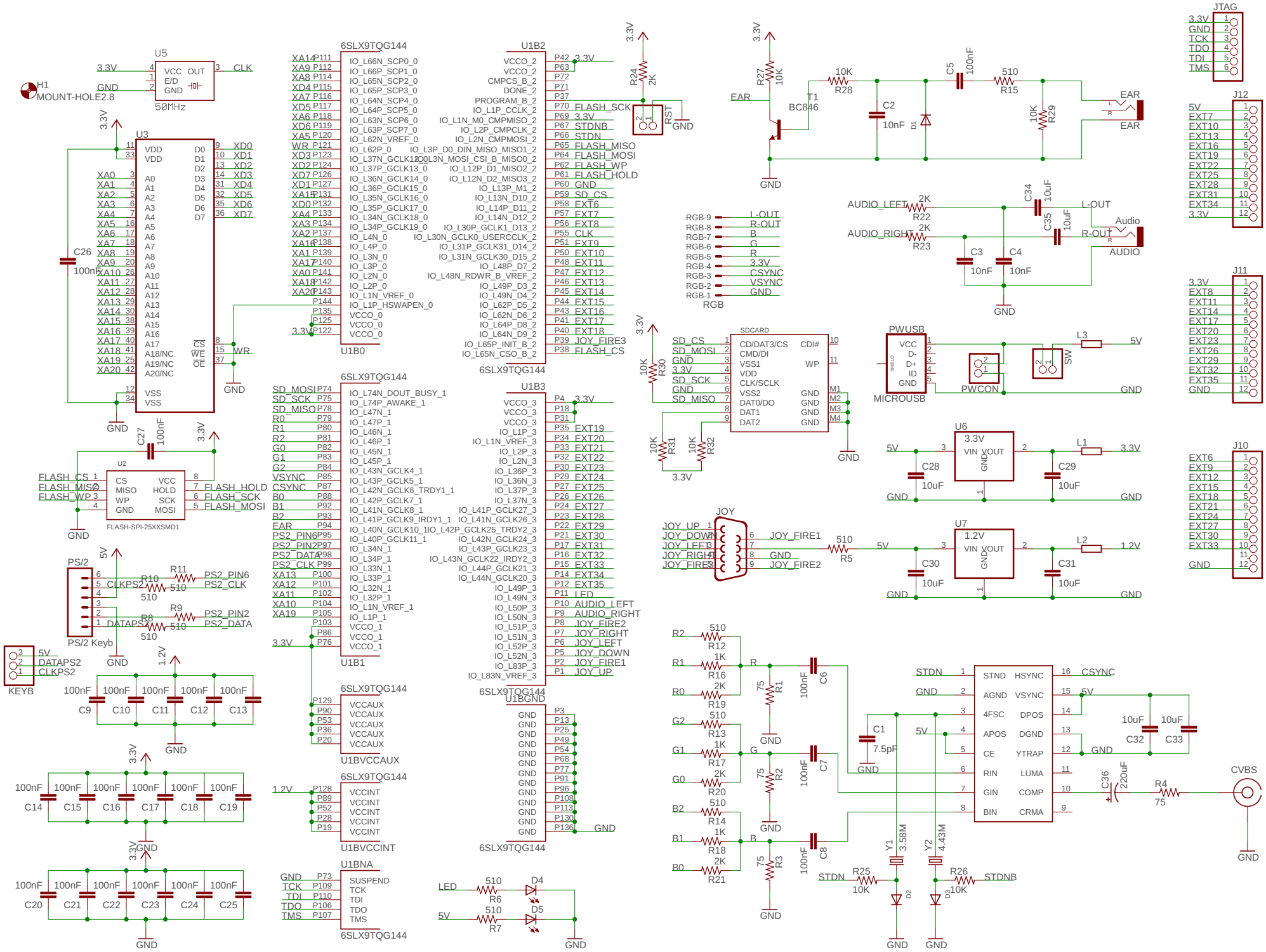
U5
VCC OUT
E/D
GND
50MHz
CLK
3.3V
GND
H1
MOUNT-HOLE2.8
U3
VDD
VDD
VSS
VSS
A0 A1 A2 A3 A4 A5 A6 A7 A8 A9 A10 A11 A12 A13 A14 A15 A16 A17 A18/NC A19/NC A20/NC
D0 D1 D2 D3 D4 D5 D6 D7
CS
WE
OE
WR
C26
100nF
6SLX9TQG144
U1B0
U1B1
U1B2
U1B3
U1BVCCAUX
U1BVCCINT
U1BNA
U1BGND
SUSPEND
TCK
TDI
TDO
TMS
U2
FLASH-SPI-25XXSMD1
CS
MISO
WP
GND
VCC
HOLD
SCK
MOSI
FLASH_CS
FLASH_MISO
FLASH_WP
FLASH_HOLD
FLASH_SCK
FLASH_MOSI
C27
PS/2
PS/2 Keyb
KEYB
CLKPS2
DATAPS2
PS2_PIN6
PS2_CLK
PS2_PIN2
PS2_DATA
R10
R11
R8
R9
510
1.2V
C9 C10 C11 C12 C13
C14 C15 C16 C17 C18 C19
C20 C21 C22 C23 C24 C25
R24
2K
RST
FLASH_SCK
FLASH_MISO
FLASH_MOSI
FLASH_HOLD
FLASH_CS
STDNB
JOY_FIRE3
AUDIO_LEFT
AUDIO_RIGHT
JOY_FIRE1
JOY_FIRE2
JOY_UP
JOY_DOWN
JOY_LEFT
JOY_RIGHT
LED
D4
D5
R6
R7
EAR
T1
BC846
R27
10K
R28
C2
10nF
C5
100nF
R15
R29
RGB
L-OUT
R-OUT
B
G
R
CSYNC
VSYNC
SDCARD
CD/DAT3/CS
CMD/DI
VSS1
VDD
CLK/SCLK
VSS2
DAT0/DO
DAT1
DAT2
CDI#
WP
SD_CS
SD_MOSI
SD_SCK
SD_MISO
R30
R31
R32
PWUSB
MICROUSB
PWCON
SW
L3
5V
AUDIO
C34
C35
C3
C4
JOY
R5
U6
3.3V
VIN VOUT
GND
L1
C28
C29
U7
1.2V
L2
C30
C31
R12
R16
R19
R13
R17
R20
R14
R18
R21
R1
R2
R3
C6
C7
C8
C1
7.5pF
STND
AGND
4FSC
APOS
CE
RIN
GIN
BIN
HSYNC
VSYNC
DPOS
DGND
YTRAP
LUMA
COMP
CRMA
C32
C33
C36
220uF
R4
75
CVBS
Y1
3.58M
Y2
4.43M
R25
R26
JTAG
TCK
TDO
TDI
TMS
J12
EXT7
EXT10
EXT13
EXT16
EXT19
EXT22
EXT25
EXT28
EXT31
EXT34
J11
EXT8
EXT11
EXT14
EXT17
EXT20
EXT23
EXT26
EXT29
EXT32
EXT35
J10
EXT6
EXT9
EXT12
EXT15
EXT18
EXT21
EXT24
EXT27
EXT30
EXT33