TAITO AMERICA CORPORATION

KICK AND RUN™

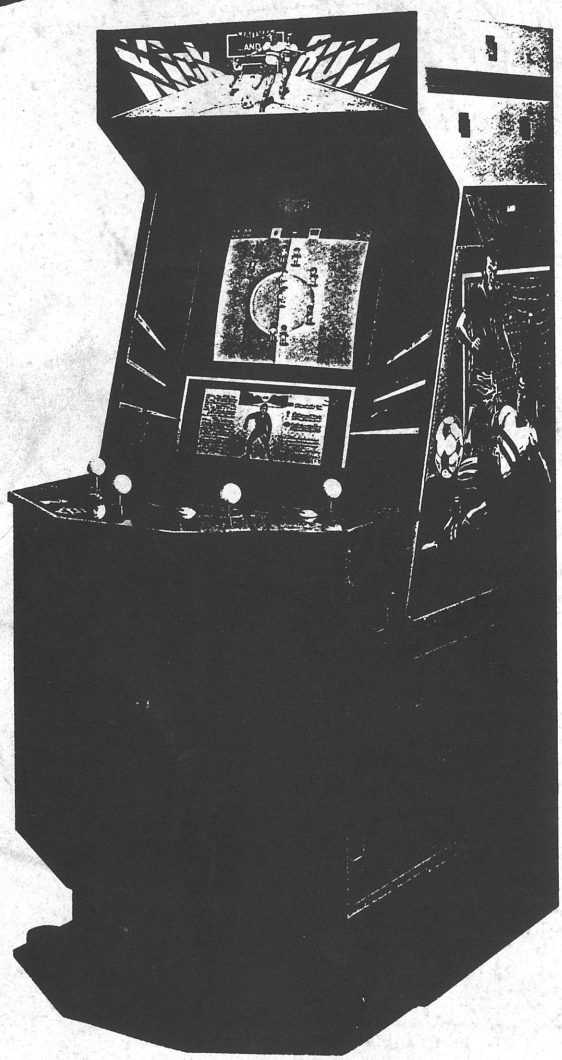

SERVICE INSTRUCTIONS

TAITO AMERICA CORPORATION
660 Wheeling Rd. Wheeling, IL 60090
(312) 520-9280. Telex 25-3290. FAX (312) 520-1309

INTRODUCTION

KICK AND RUN is a realistic soccer game. It contains every aspect of the actual game, dribbling, passing, heading the ball, shooting, throw-ins. The game may be played by one to four players.

With one coin you play against the computer, with two coins two players play against the computer, or each other. With three coins two players play against one player, with four coins two players play against two other players.

You can select which international team you wish to be, and play against the others. Each team has its own individual style of play and level of skill. Some are great passing teams, others are hard shooters, yet others have great play making skills, some play fast, others slow.

There are three basic controls for each player, JOYSTICK, PUSHBUTTON and a KICK SWITCH.

During play one or more must be used, some at the same time to provide action. The following table shows which to use and when.

	JOYSTICK	PUSHBUTTON	KICK SWITCH
PLAYER MOVEMENT	*		
LINE PASS	*		X
FLY PASS	*	0	
OVERHEAD PASS		0	X
SHOOT	*		X
HEADER	*	0	
SLIDING TACKLE			X
GOALIE JUMP	*	0	
GOALIE KICK	*		X
GOALIE THROW	*	0	
THROW-IN	*	0	
FREE KICK (FLY)	*	0	
FREE KICK (LINE)		0	X
GOAL KICK	*	0	X
CORNER KICK	*		X

GAME INSPECTION

KICK AND RUN is ready to play when received. You should however carefully inspect the game. This is to insure that the game is in perfect condition. Be sure to verify the following before turning the game on.

Examine external cabinet for chips, dents or broken parts.

Open rear access door and check:

- Plug-in connectors to see that they are firmly seated.
- Speaker connections.
- All player control connections.
- For loose components on P.C. boards.
- Fuses, making sure they are firmly in holders.
- Coin mechanisms.
- For loose foreign objects, especially metal, screws or parts which might cause electrical problems.

The video monitor is properly adjusted before shipping, if there are any adjustments necessary, refer to our video monitor manual (72-00016-001).

If problems occur or technical assistance is required, contact our customer service department at (312) 520-9280.

POWER REQUIREMENTS

The game is shipped ready for operation at 120VAC,60Hz with a power consumption of approximately 250 watts, foreign shipped games operate at 220VAC 50Hz.

CAUTION

FOR SAFE OPERATION IT IS RECOMMENDED THE CABINET BE GROUNDED. THIS GAME IS EQUIPPED WITH A THREE CONDUCTOR POWER CABLE. THE THIRD CONDUCTOR IS THE GROUND CONDUCTOR AND WHEN THE CABLE IS PLUGGED INTO AN APPROPRIATE RECEPTABLE, THE GAME IS GROUNDED. THE OFFSET PIN ON THE POWER CABLE'S THREE-PRONG CONNECTOR IS THE GROUND CONNECTION

LOCATION SPACE REQUIREMENTS

DEPTH 39½"
WIDTH 29"
HEIGHT 70-3/4"
WEIGHT 300 pounds

GAME INSTALLATION

The following precautions should be followed when installing the game.

- Avoid rough handling of game, the picture tube is fragile.
- Game must be installed level, as the players will be stepping hard on the kick switch.
- Avoid installing the game where it may receive excessive sunlight or heat, to prevent a rising internal temperature.
- Do not install in a damp or dusty location.

DIP SWITCH SETTINGS

SWITCH A

TITLE		1	2	3	4	5	6	7	8
SYSTEM SELECTION		OFF							
SCREEN INVERSION	CORRECT		OFF						
			ON						
TEST MODE	NORMAL			OFF					
	TEST			ON					
SOUND	PRODUCED				OFF				
	NOT PRODUCED				ON				
COINS	1 COIN, 1 PLAY					OFF	OFF	OFF	OFF
	1 COIN, 2 PLAY					ON	OFF	OFF	OFF
	1 COIN, 3 PLAY					OFF	ON	OFF	OFF
	1 COIN, 4 PLAY					ON	ON	OFF	OFF
	1 COIN, 5 PLAY					OFF	OFF	ON	OFF
	1 COIN, 6 PLAY					ON	OFF	ON	OFF
	2 COINS, 3 PLAY					OFF	ON	ON	OFF
	3 COINS, 2 PLAY					ON	ON	ON	OFF
	1 COIN, 1 PLAY					OFF	OFF	OFF	ON
	2 COINS, 1 PLAY					ON	OFF	OFF	ON
	3 COINS, 1 PLAY					OFF	ON	OFF	ON
	4 COINS, 1 PLAY					ON	ON	OFF	ON
	5 COINS, 1 PLAY					OFF	OFF	ON	ON
	6 COINS, 1 PLAY					ON	OFF	ON	ON
	1 COIN, 1 PLAY					OFF	ON	ON	ON
	1 COIN, 1 PLAY					ON	ON	ON	ON

SWITCH B

TITLE		1	2	3	4	5	6	7	8
DIFFICULTY	LEVEL B	OFF							
	LEVEL A	ON	OFF						
	LEVEL C	OFF							
	LEVEL D	ON	ON						
PLAYING TIME	ONE MINUTE			OFF					
	ONE MINUTE & 20SEC.			ON	OFF				
	ONE MINUTE & 40SEC.			OFF					
	40 SECONDS			ON	ON				
PLAYER KICK	TWO					OFF			
	FOUR					ON			
SYSTEM SELECTION							OFF		
NUMBER OF MATCHES	6 TEAMS							OFF	
	2 TEAMS							ON	
SYSTEM SELECTION									ON

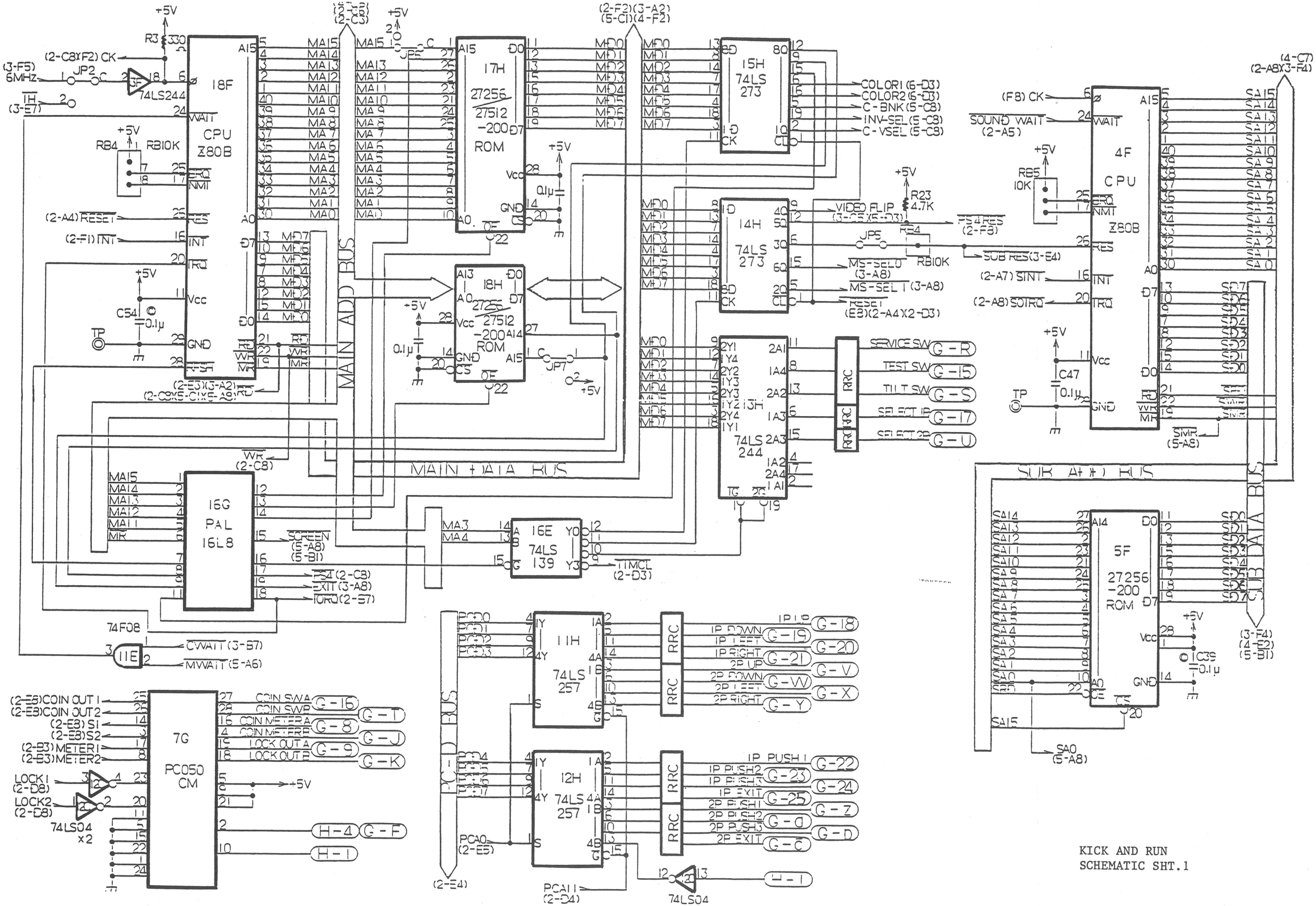

KICK AND RUN
SCHEMATIC SHT.1

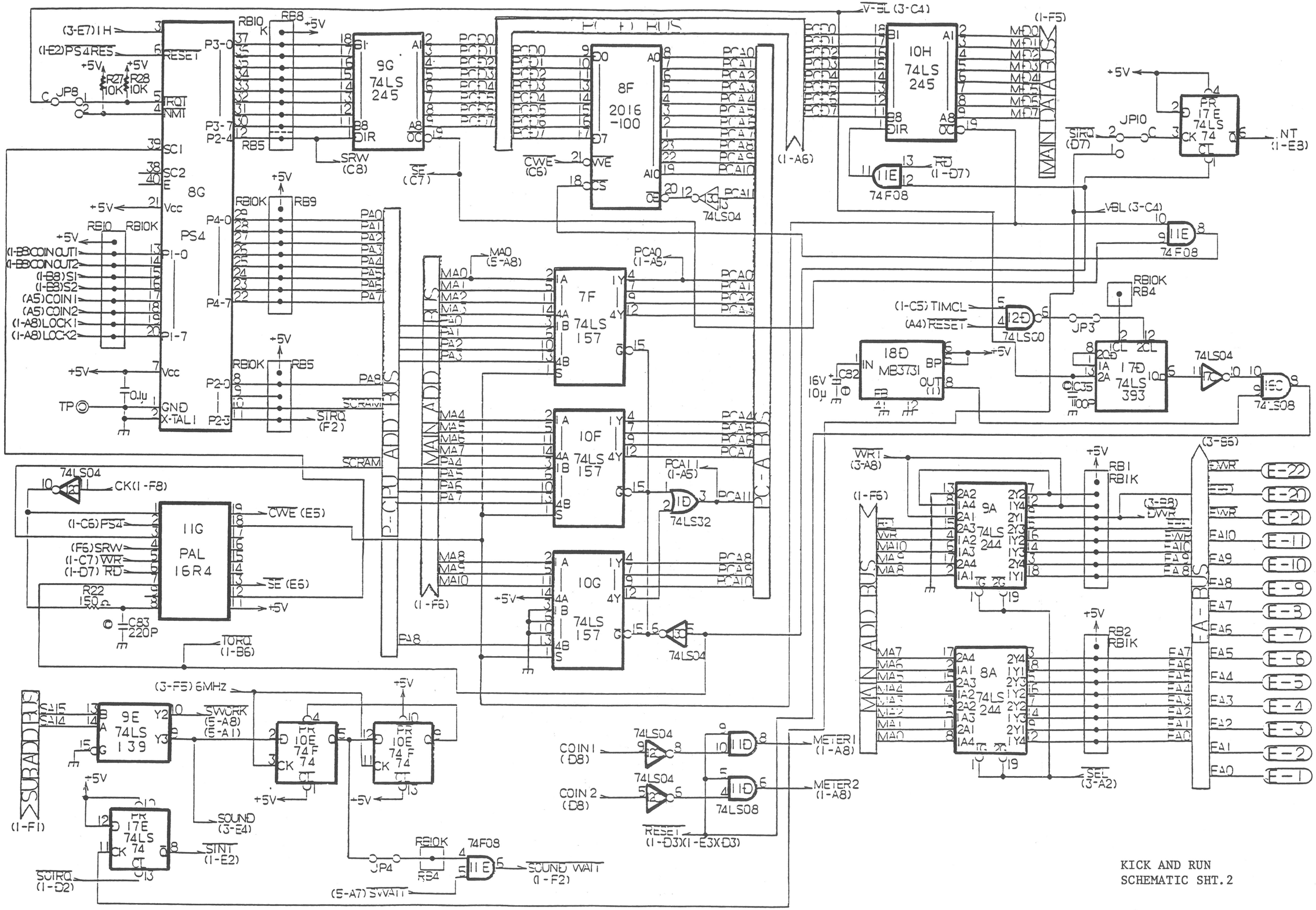

KICK AND RUN
SCHEMATIC SHT.2

KICK AND RUN
SCHEMATIC SHT. 3

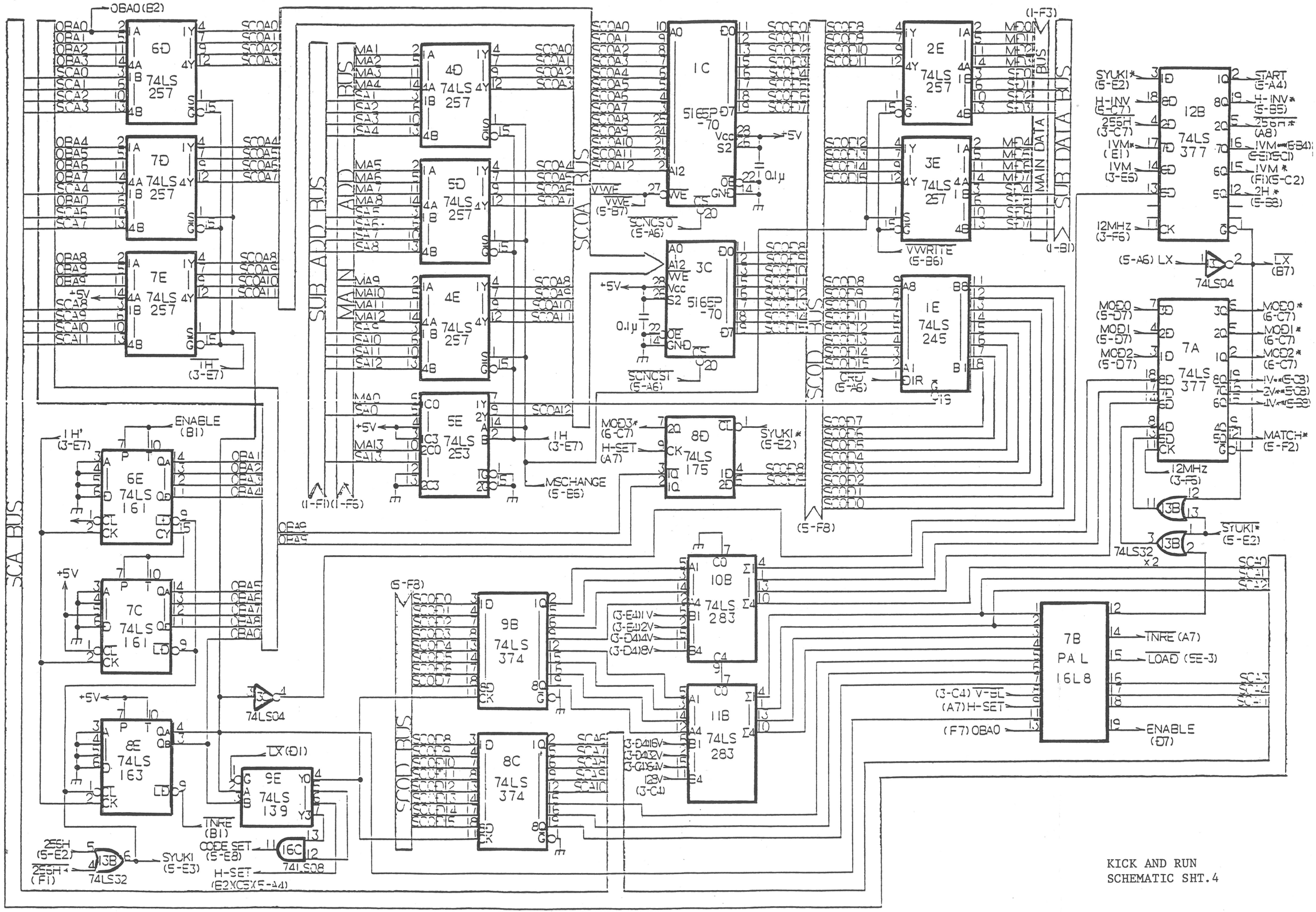
SCA BUS
SUB ADD BUS
MAIN ADD BUS
SCOA BUS
SCOD BUS
SUB DATA BUS
MAIN DATA BUS
6D 74LS 257
7D 74LS 257
7E 74LS 257
4D 74LS 257
5D 74LS 257
4E 74LS 257
5E 74LS 253
1C 5165P-70
3C 5165P-70
2E 74LS 257
3E 74LS 257
1E 74LS 245
12B 74LS 377
7A 74LS 377
8D 74LS 175
6E 74LS 161
7C 74LS 161
8E 74LS 163
9E 74LS 139
9B 74LS 374
8C 74LS 374
10B 74LS 283
11B 74LS 283
7B PAL 16L8
74LS04
74LS32
74LS08
ENABLE (B1)
SYUKI* (5-E2)
H-SET (A7)
MSCHANGE (5-B5)
VWRITE (5-B6)
SCNCS0 (5-A6)
SCNCST (5-A6)
TNRE (A7)
LOAD (5E-3)
ENABLE (D7)
SYUKI (5-E3)
TNRE (B1)
CODE SET (5-E8)
H-SET (E2)(C5)(5-A4)
START (5-A4)
MATCH* (5-F2)
12MHz (3-F5)
KICK AND RUN
SCHEMATIC SHT.4

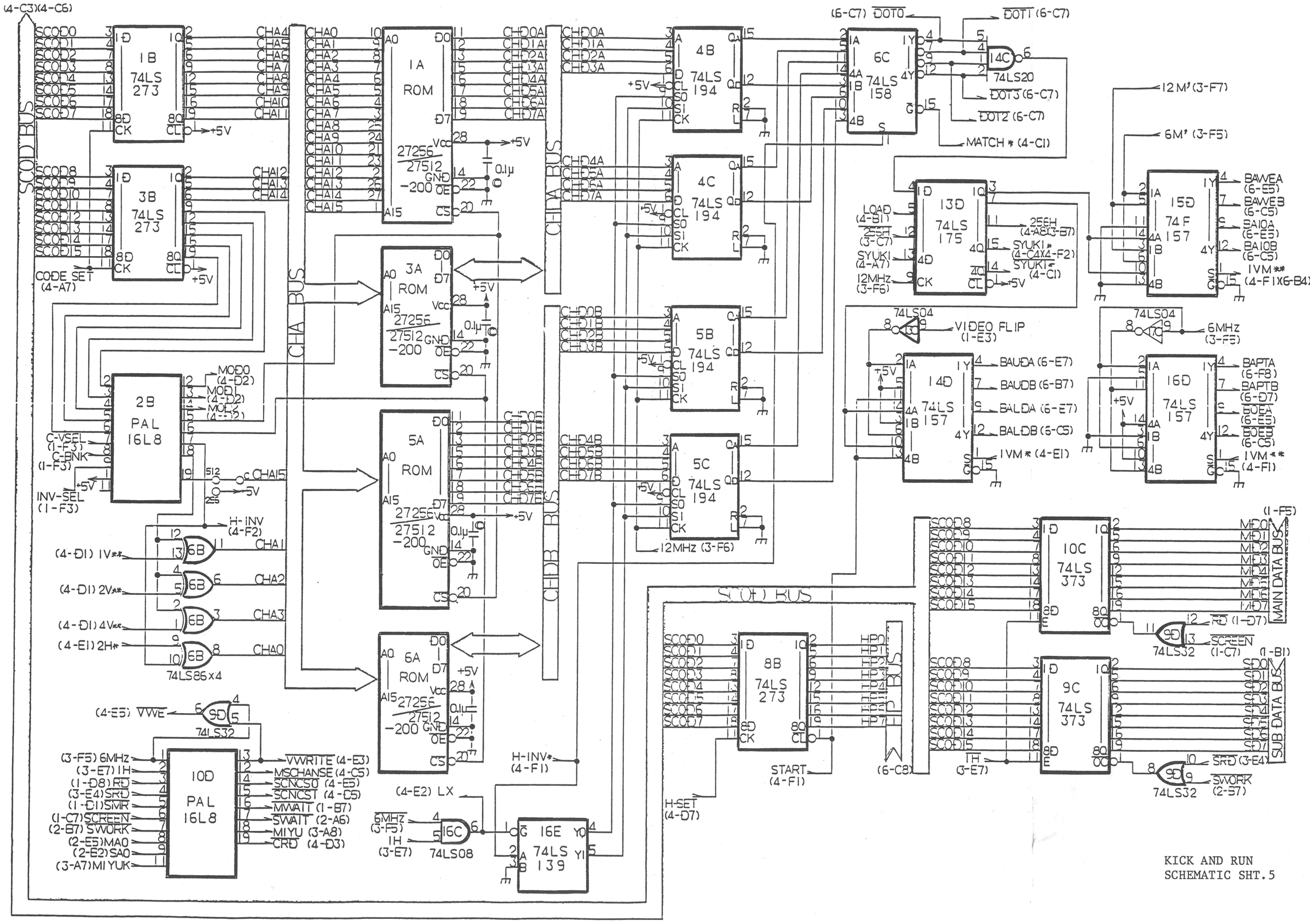
(4-C3)(4-C6)
SCOD BUS
CHA BUS
CHDB BUS
SCOD BUS
CHDB BUS
1B 74LS 273
3B 74LS 273
1A ROM 27256 27512 -200
3A ROM
5A ROM
6A ROM
2B PAL 16L8
10D PAL 16L8
4B 74LS 194
4C 74LS 194
5B 74LS 194
5C 74LS 194
6C 74LS 158
14C 74LS20
13D 74LS 175
15D 74F 157
14D 74LS 157
16D 74LS 157
8B 74LS 273
10C 74LS 373
9C 74LS 373
16E 74LS 139
6B 74LS86x4
9D 74LS32
16C 74LS08
74LS04
+5V
0.1μ
CODE SET (4-A7)
C-VSEL (1-F3)
C-BNK (1-F5)
INV-SEL (1-F3)
H-INV (4-F2)
MOD0 (4-D2)
MOD1 (4-D2)
MOD2 (4-D2)
(4-D1) 1V**
(4-D1) 2V**
(4-D1) 4V**
(4-E1) 2H*
(4-E5) VWE
(3-F5) 6MHz
(3-E7) 1H
(1-D8) RD
(3-E4) SRD
(1-D1) SMR
(1-C7) SCREEN
(2-B7) SWORK
(2-E5) MA0
(2-E2) SA0
(3-A7) MIYUK
VWRITE (4-E3)
MSCHANSE (4-C5)
SCNCS0 (4-E5)
SCNCS1 (4-C5)
MWAIT (1-B7)
SWAIT (2-A6)
MIYU (3-A8)
CRD (4-D3)
(4-E2) LX
H-INV* (4-F1)
12MHz (3-F6)
(6-C7) DOT0
DOT1 (6-C7)
DOT3 (6-C7)
DOT2 (6-C7)
MATCH * (4-C1)
LOAD (4-B1)
255H (3-C7)
SYUKI (4-A7)
12MHz (3-F6)
256H (4-A8)(3-B7)
SYUKI* (4-C4)(4-F2)
SYUKI* (4-C1)
12M' (3-F7)
6M' (3-F5)
BAWEA (6-E5)
BAWEB (6-C5)
BA10A (6-E5)
BA10B (6-C5)
1VM** (4-F1)(6-B4)
VIDEO FLIP (1-E3)
6MHz (3-F5)
BAUDA (6-E7)
BAUDB (6-B7)
BALDA (6-E7)
BALDB (6-C5)
1VM* (4-E1)
BAPTA (6-F8)
BAPTB (6-D7)
BOEA (6-E5)
BOEB (6-C5)
1VM** (4-F1)
START (4-F1)
H-SET (4-D7)
(6-C8)
1H (3-E7)
RD (1-D7)
SCREEN (1-C7)
SRD (3-E4)
SWORK (2-E7)
MAIN DATA BUS
SUB DATA BUS
(1-F5)
(1-B1)
KICK AND RUN
SCHEMATIC SHT.5

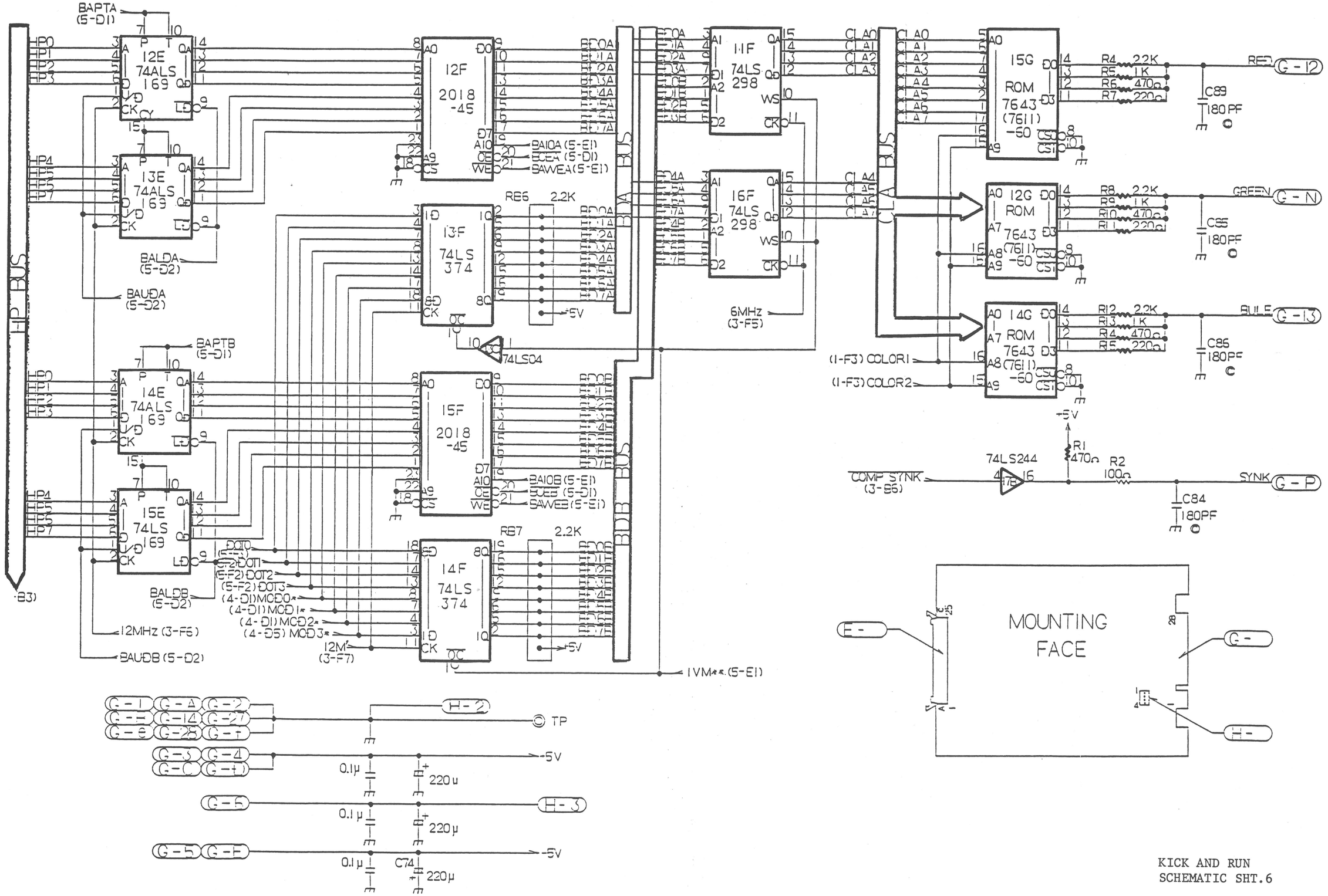

KICK AND RUN
SCHEMATIC SHT.6

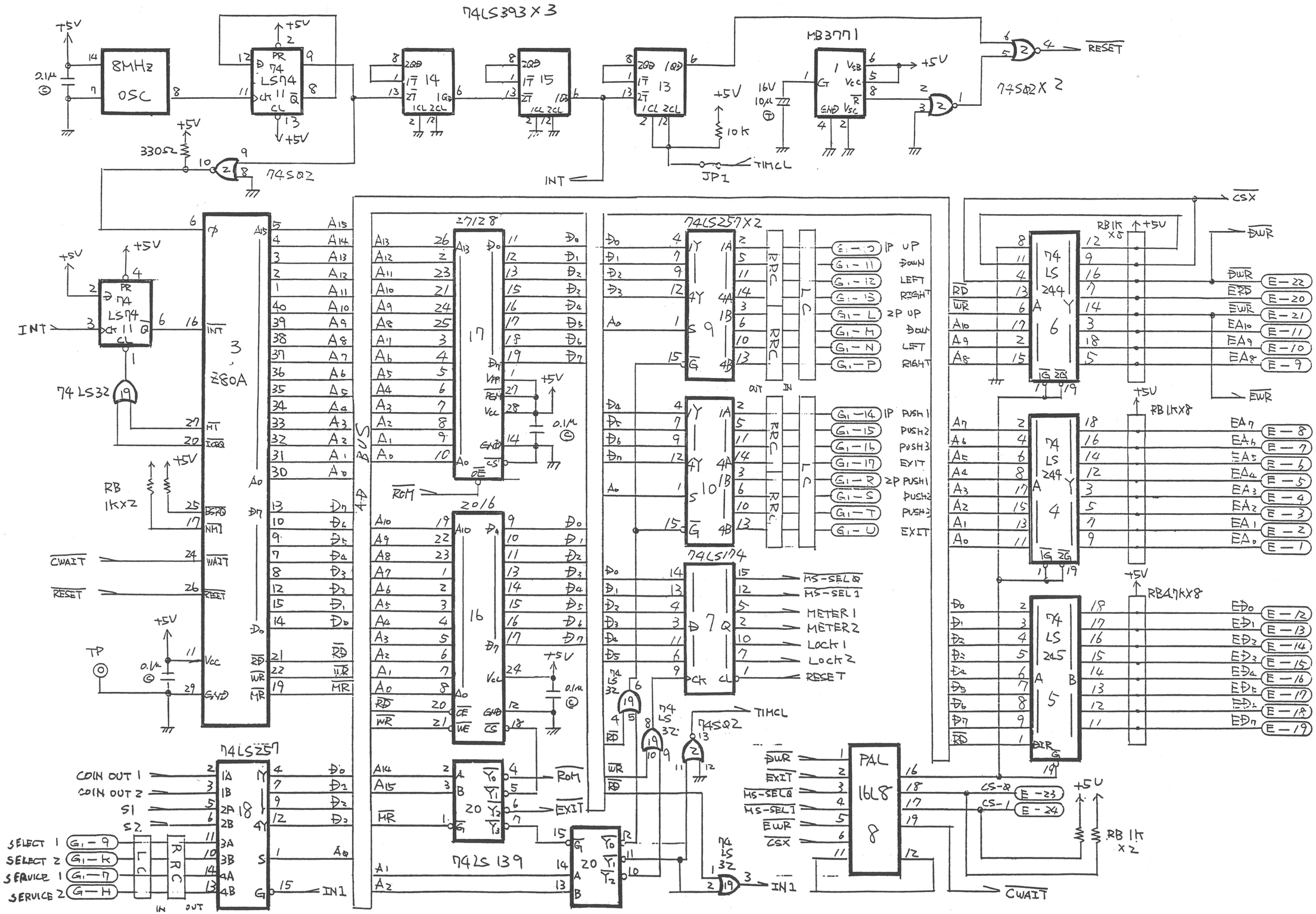
74LS393 X 3
8MHz OSC
74LS74
74S02
MB3771
74S02 X 2
RESET
TIMCL
JP1
INT
Z80A
74LS32
RB 1KX2
CWAIT
RESET
TP
27128
2016
74LS257
74LS257X2
74LS174
74LS139
74LS257
COIN OUT 1
COIN OUT 2
S1
S2
SELECT 1
SELECT 2
SERVICE 1
SERVICE 2
IN1
ROM
EXIT
MS-SEL0
MS-SEL1
METER1
METER2
LOCK1
LOCK2
PAL 16L8
CSX
DWR
ERD
EWR
RB1K X8
RB47KX8
RB 1K X2
CS-0
CS-1

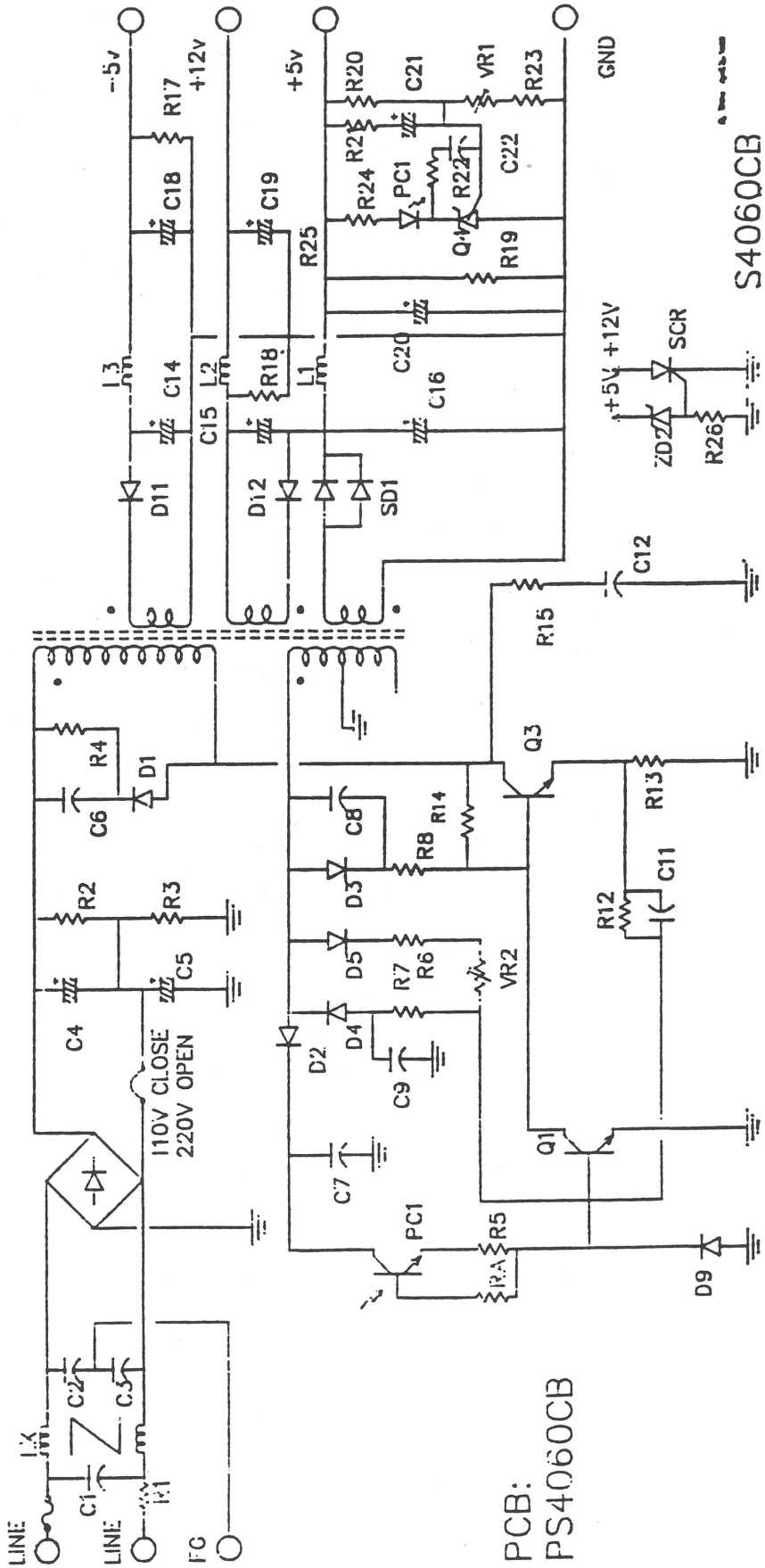

KICK AND RUN
POWER SUPPLY SCHEMATIC

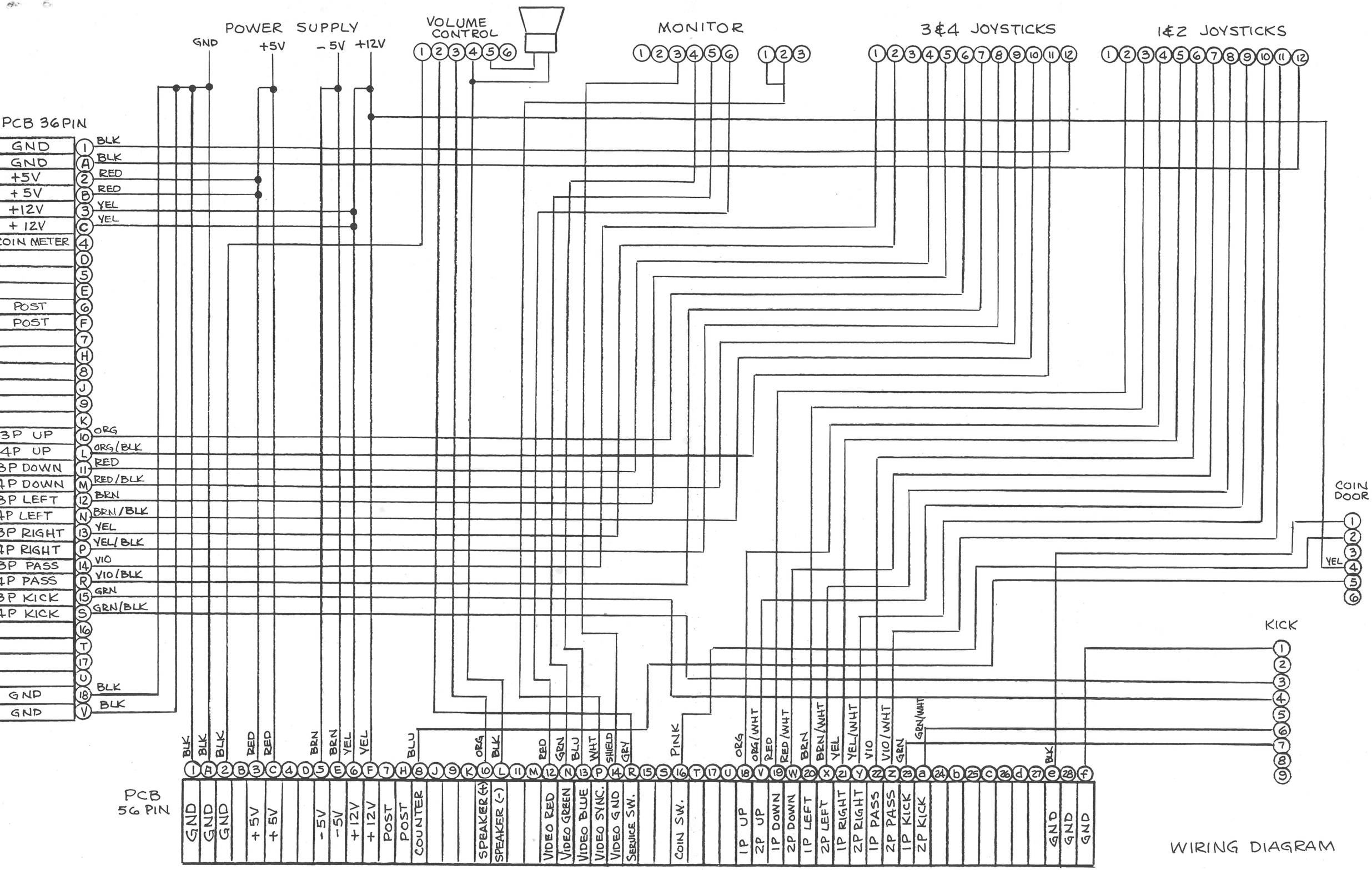

WIRING DIAGRAM