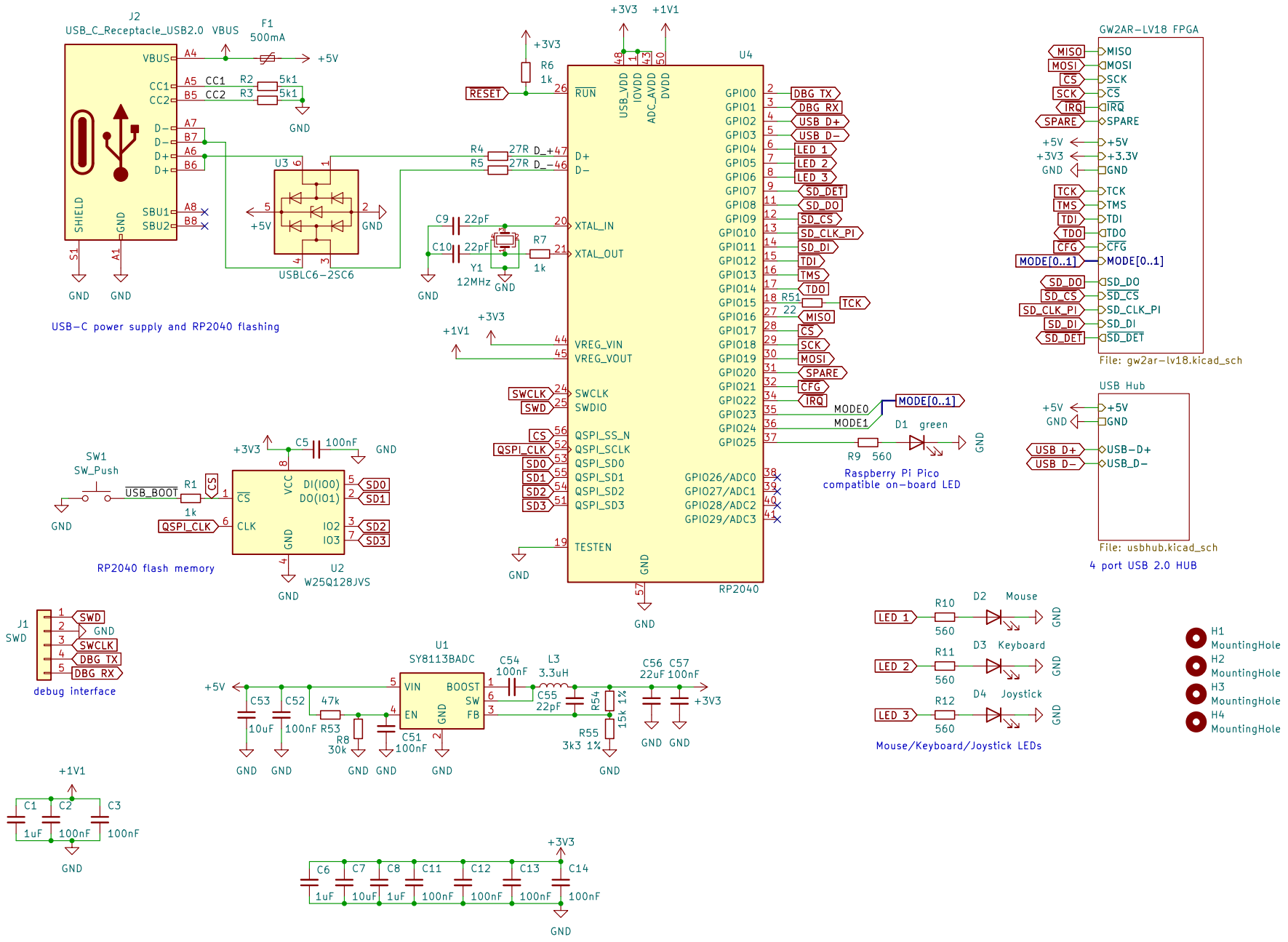
J2
USB_C_Receptacle_USB2.0
VBUS
F1
500mA
+5V
CC1
CC2
R2
R3
5k1
GND
D−
D+
SHIELD
SBU1
SBU2
S1
A1
U3
USBLC6−2SC6
USB−C power supply and RP2040 flashing
+3V3
+1V1
R6
1k
RESET
U4
RP2040
RUN
USB_VDD
IOVDD
ADC_AVDD
DVDD
R4
R5
27R
D_+
D_−
XTAL_IN
XTAL_OUT
C9
C10
22pF
Y1
12MHz
R7
VREG_VIN
VREG_VOUT
SWCLK
SWDIO
QSPI_SS_N
QSPI_SCLK
QSPI_SD0
QSPI_SD1
QSPI_SD2
QSPI_SD3
TESTEN
GPIO0
GPIO1
GPIO2
GPIO3
GPIO4
GPIO5
GPIO6
GPIO7
GPIO8
GPIO9
GPIO10
GPIO11
GPIO12
GPIO13
GPIO14
GPIO15
GPIO16
GPIO17
GPIO18
GPIO19
GPIO20
GPIO21
GPIO22
GPIO23
GPIO24
GPIO25
GPIO26/ADC0
GPIO27/ADC1
GPIO28/ADC2
GPIO29/ADC3
DBG TX
DBG RX
USB D+
USB D−
LED 1
LED 2
LED 3
SD_DET
SD_DO
SD_CS
SD_CLK_PI
SD_DI
TDI
TMS
TDO
TCK
MISO
CS
SCK
MOSI
SPARE
CFG
IRQ
R51
22
MODE0
MODE1
MODE[0..1]
D1
green
R9
560
Raspberry Pi Pico
compatible on−board LED
GW2AR−LV18 FPGA
+3.3V
File: gw2ar−lv18.kicad_sch
USB Hub
File: usbhub.kicad_sch
4 port USB 2.0 HUB
SW1
SW_Push
USB_BOOT
R1
1k
C5
100nF
VCC
DI(IO0)
DO(IO1)
IO2
IO3
U2
W25Q128JVS
RP2040 flash memory
J1
SWD
debug interface
U1
SY8113BADC
VIN
EN
BOOST
SW
FB
C54
100nF
L3
3.3uH
C55
22pF
R54
15k 1%
R55
3k3 1%
C56
22uF
C57
100nF
C53
10uF
C52
100nF
47k
R53
R8
30k
C51
100nF
LED 1
LED 2
LED 3
R10
R11
R12
560
D2
Mouse
D3
Keyboard
D4
Joystick
Mouse/Keyboard/Joystick LEDs
H1
MountingHole
H2
MountingHole
H3
MountingHole
H4
MountingHole
C1
C2
C3
1uF
100nF
C6
C7
C8
C11
C12
C13
C14
10uF

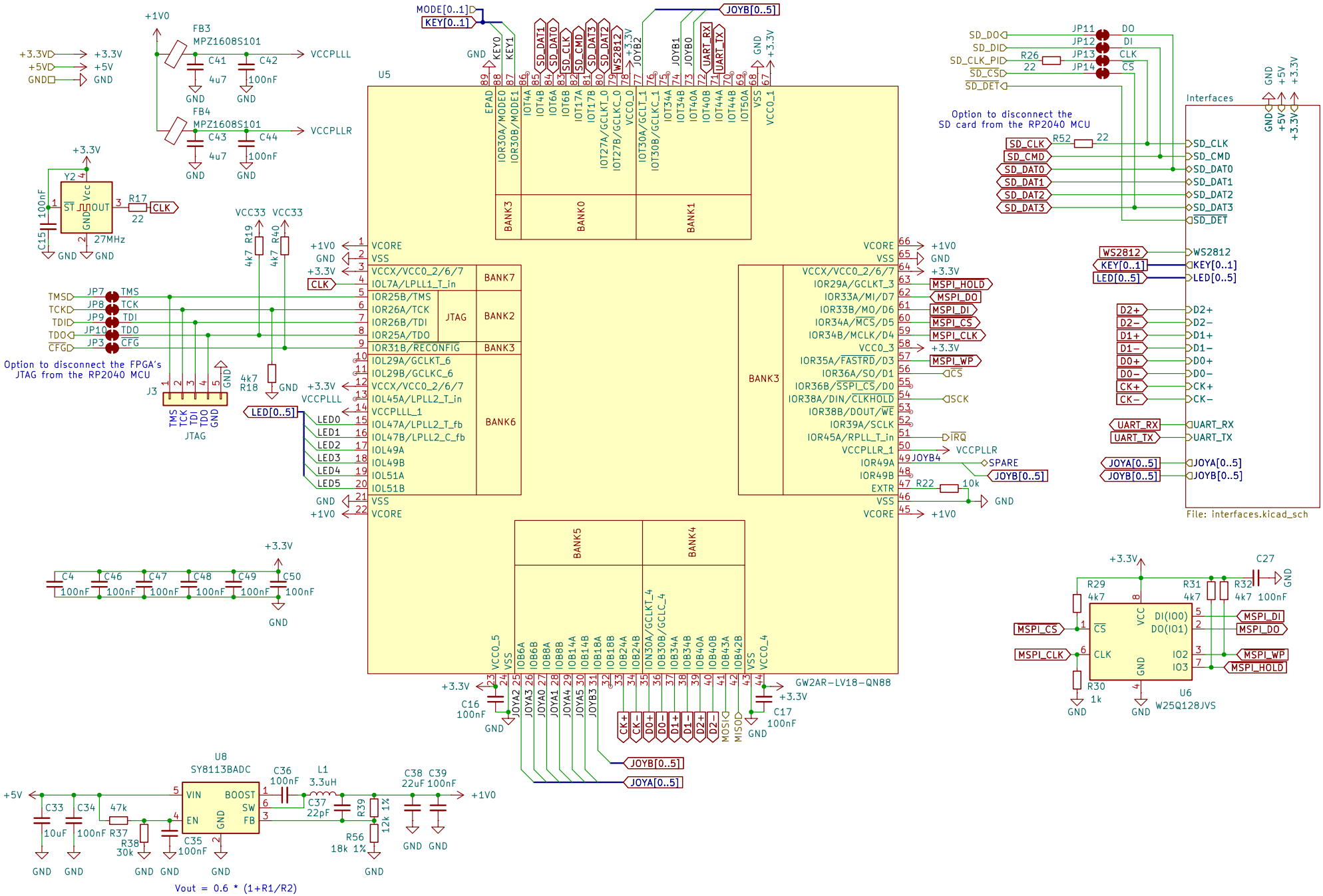
U5
GW2AR-LV18-QN88
BANK0
BANK1
BANK2
BANK3
BANK4
BANK5
BANK6
BANK7
JTAG
FB3 MPZ1608S101
FB4 MPZ1608S101
VCCPLLL
VCCPLLR
Y2 27MHz
Option to disconnect the FPGA's JTAG from the RP2040 MCU
Option to disconnect the SD card from the RP2040 MCU
Interfaces
File: interfaces.kicad_sch
U6 W25Q128JVS
U8 SY8113BADC
Vout = 0.6 * (1+R1/R2)

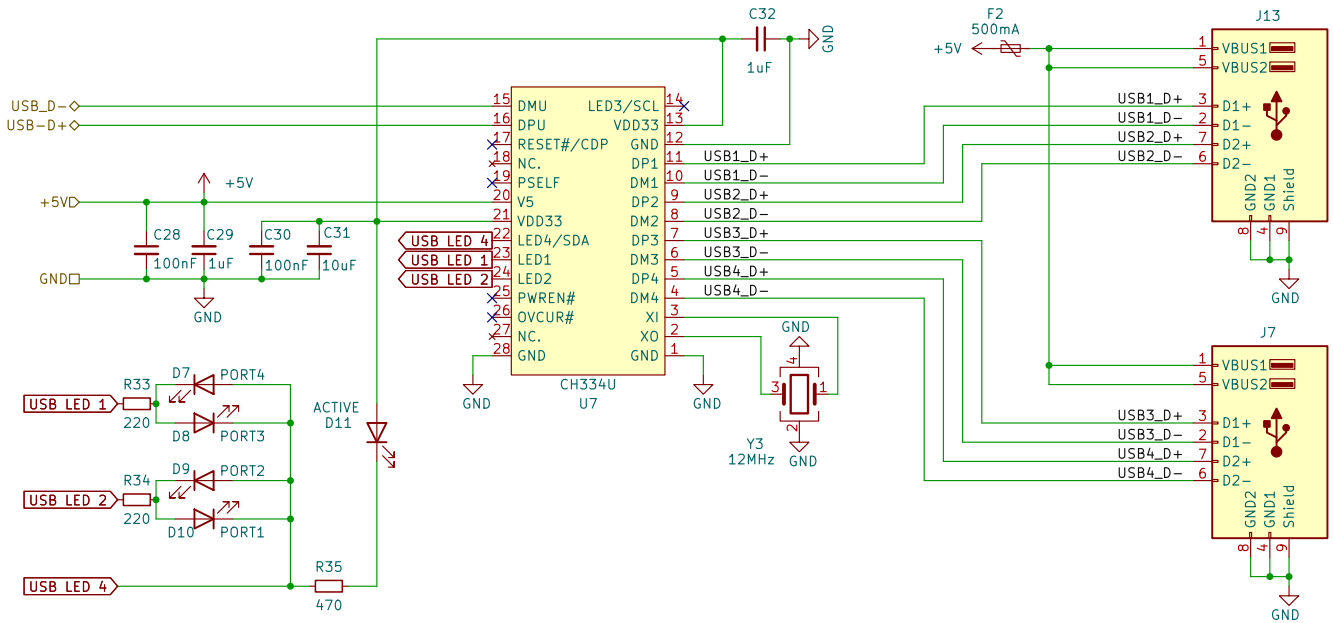
USB_D−
USB−D+
+5V
GND
C28
100nF
C29
1uF
C30
100nF
C31
10uF
USB LED 4
USB LED 1
USB LED 2
R33
220
D7
PORT4
D8
PORT3
R34
220
D9
PORT2
D10
PORT1
R35
470
ACTIVE
D11
DMU
DPU
RESET#/CDP
NC.
PSELF
V5
VDD33
LED4/SDA
LED1
LED2
PWREN#
OVCUR#
NC.
GND
LED3/SCL
VDD33
GND
DP1
DM1
DP2
DM2
DP3
DM3
DP4
DM4
XI
XO
GND
CH334U
U7
C32
1uF
F2
500mA
USB1_D+
USB1_D−
USB2_D+
USB2_D−
USB3_D+
USB3_D−
USB4_D+
USB4_D−
Y3
12MHz
J13
VBUS1
VBUS2
D1+
D1−
D2+
D2−
GND2
GND1
Shield
J7

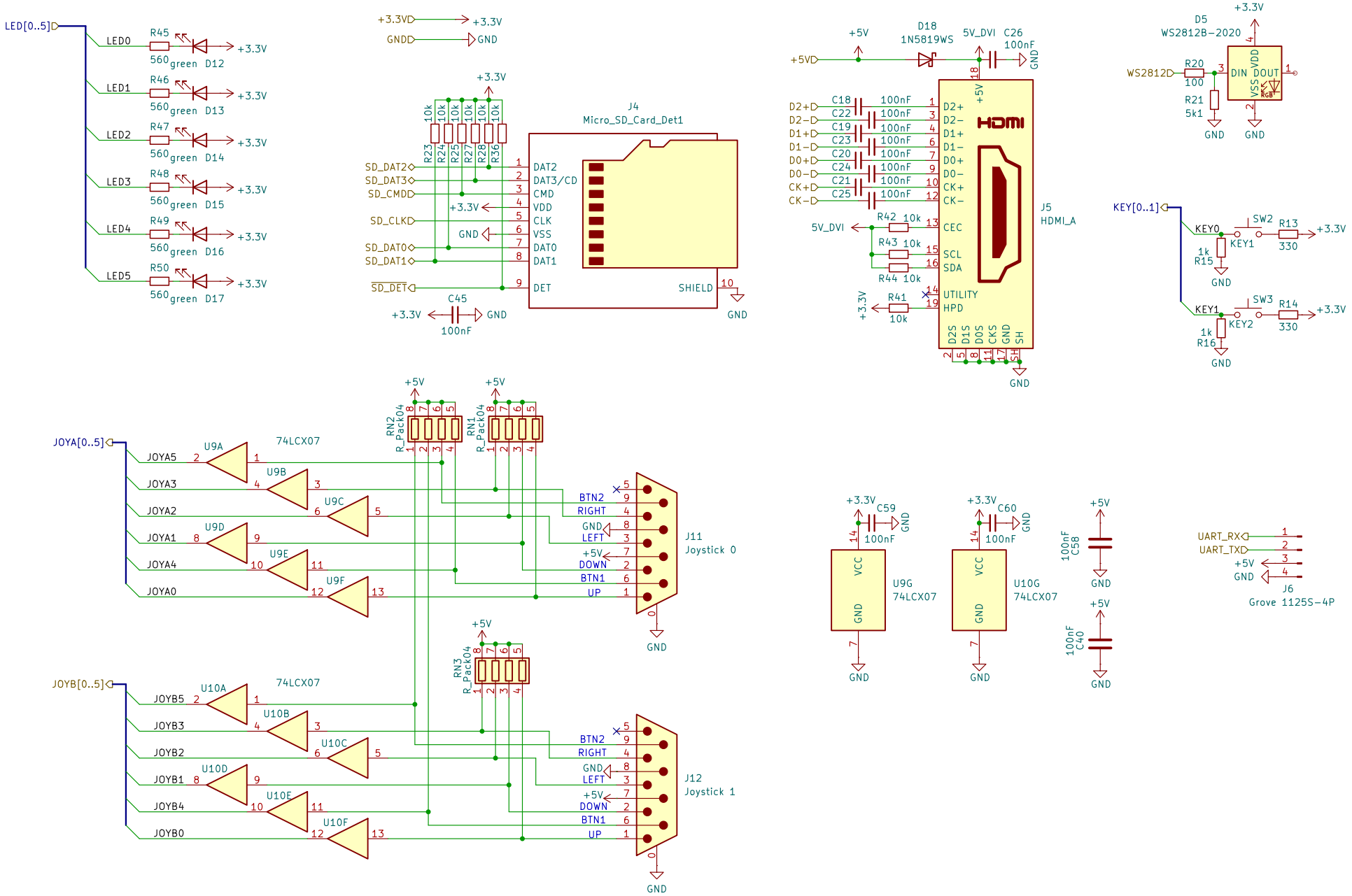
LED[0..5]
LED0
LED1
LED2
LED3
LED4
LED5
R45
R46
R47
R48
R49
R50
560
green
D12
D13
D14
D15
D16
D17
+3.3V
GND
J4
Micro_SD_Card_Det1
SD_DAT2
SD_DAT3
SD_CMD
SD_CLK
SD_DAT0
SD_DAT1
SD_DET
DAT2
DAT3/CD
CMD
VDD
CLK
VSS
DAT0
DAT1
DET
SHIELD
R23
R24
R25
R27
R28
R36
10k
C45
100nF
+5V
D18
1N5819WS
5V_DVI
C26
C18
C22
C19
C23
C20
C24
C21
C25
D2+
D2−
D1+
D1−
D0+
D0−
CK+
CK−
CEC
SCL
SDA
UTILITY
HPD
R42
R43
R44
R41
J5
HDMI_A
D5
WS2812B−2020
WS2812
R20
R21
5k1
DIN
DOUT
VDD
VSS
KEY[0..1]
KEY0
KEY1
SW2
SW3
R13
R14
R15
R16
330
1k
JOYA[0..5]
JOYA5
JOYA3
JOYA2
JOYA1
JOYA4
JOYA0
U9A
U9B
U9C
U9D
U9E
U9F
74LCX07
RN2
RN1
R_Pack04
BTN2
RIGHT
LEFT
DOWN
BTN1
UP
J11
Joystick 0
JOYB[0..5]
JOYB5
JOYB3
JOYB2
JOYB1
JOYB4
JOYB0
U10A
U10B
U10C
U10D
U10E
U10F
RN3
J12
Joystick 1
C59
C60
U9G
U10G
VCC
C58
C40
UART_RX
UART_TX
J6
Grove 1125S−4P