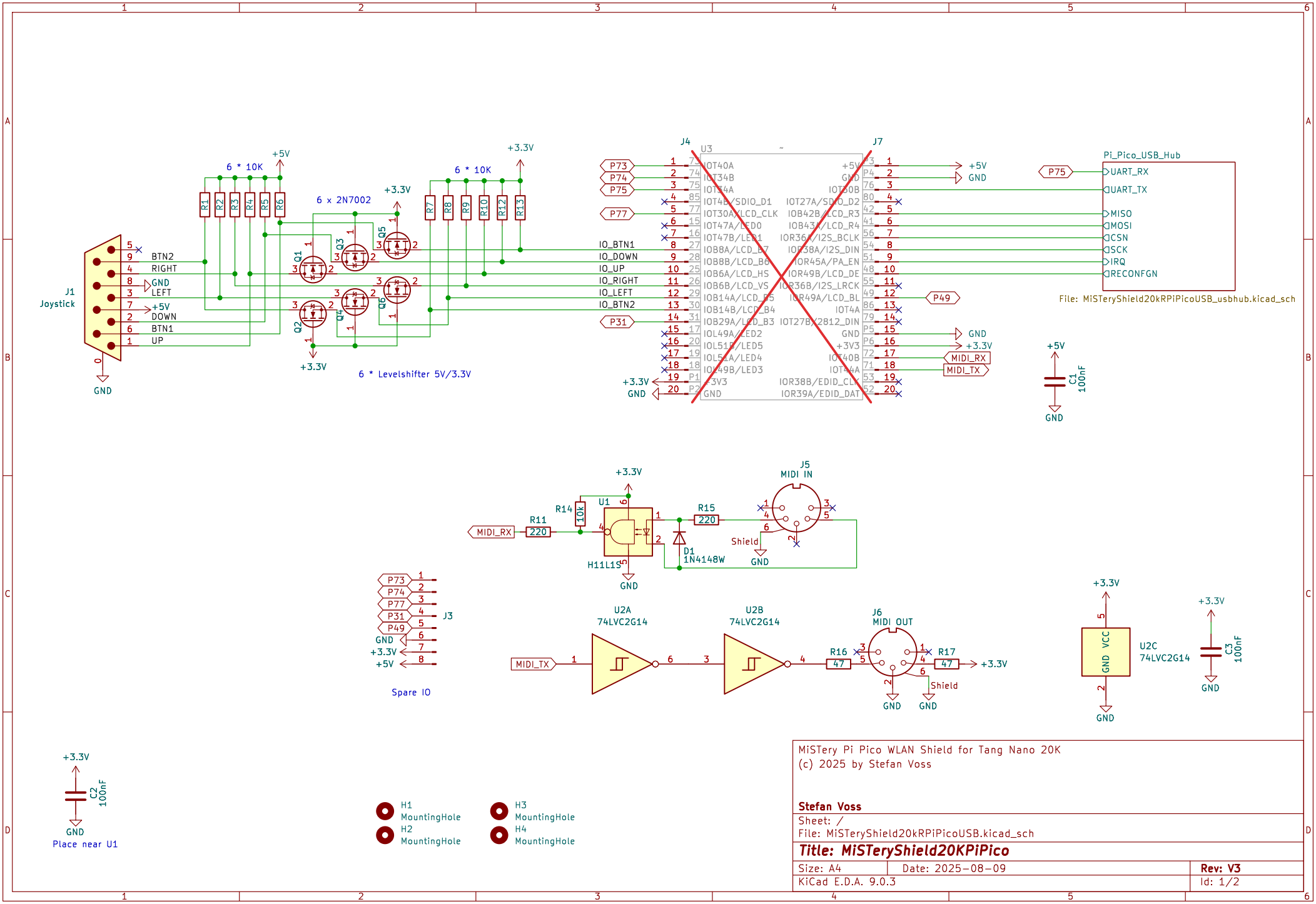

MiSTery Pi Pico WLAN Shield for Tang Nano 20K
(c) 2025 by Stefan Voss

Stefan Voss

Sheet: /
File: MiSTeryShield20kRPiPicoUSB.kicad_sch

Title: MiSTeryShield20KPiPico

Size: A4	Date: 2025-08-09	**Rev: V3**
KiCad E.D.A. 9.0.3		Id: 1/2

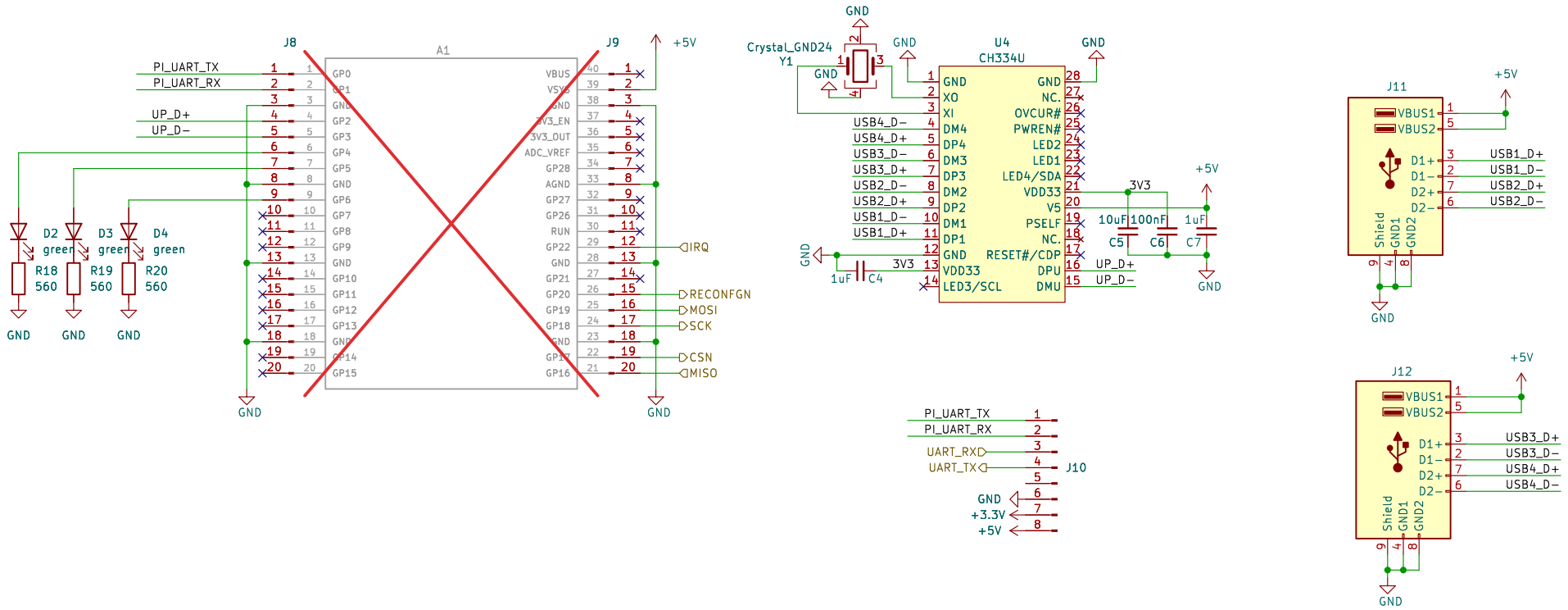

MiSTery Pi Pico WLAN Shield for Tang Nano 20K
(c) 2025 by Stefan Voss

Stefan Voss

Sheet: /Pi_Pico_USB_Hub/
File: MiSTeryShield20kRPiPicoUSB_usbhub.kicad_sch

Title: MiSTeryShield20KRPiPico

Size: A4	Date: 2025-08-09	**Rev: V3**
KiCad E.D.A. 9.0.3		Id: 2/2