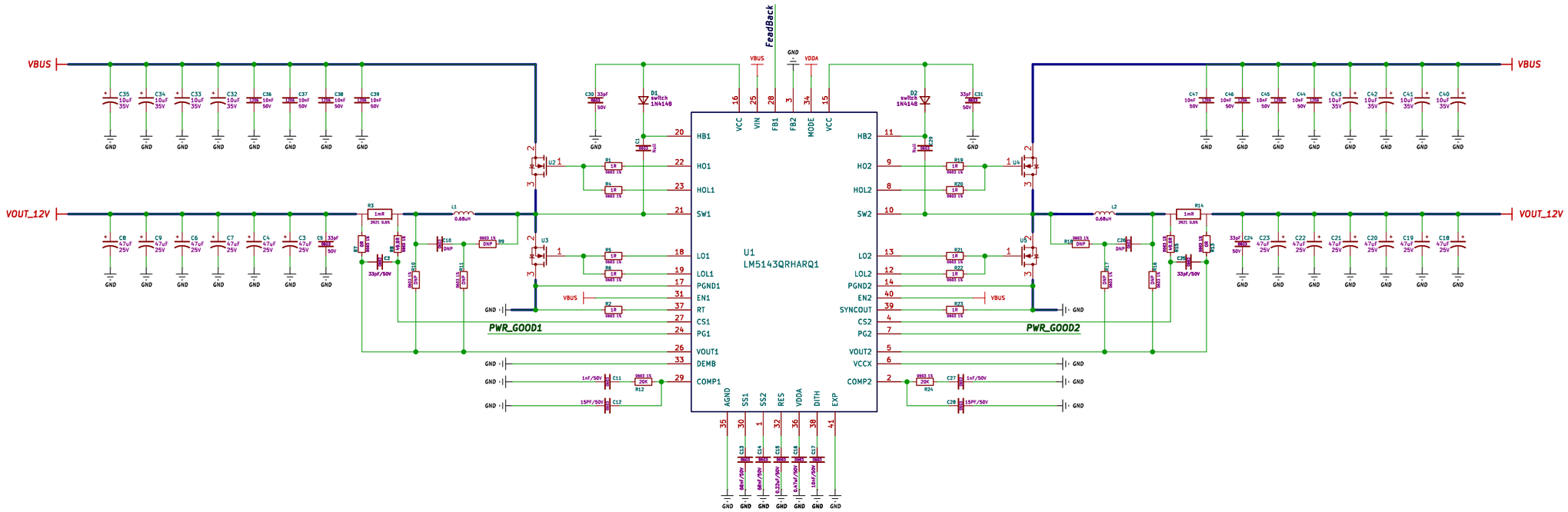

misaka10039	
Item	
Sheet: /	
File: Power-main.kicad_sch	
Title: LM5143测试板	
Size: A3 Date: 2025-06-22	**Rev: Ver0.1**
KiCad E.D.A. 9.0.2	Id: 1/1