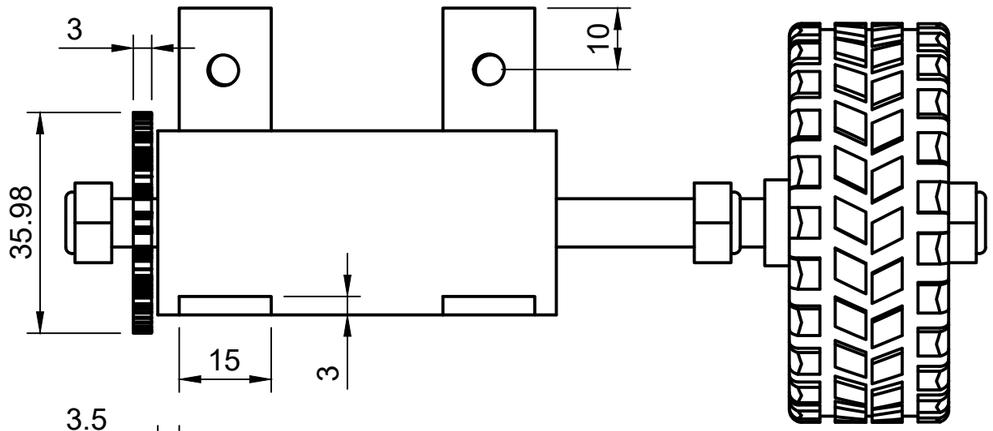

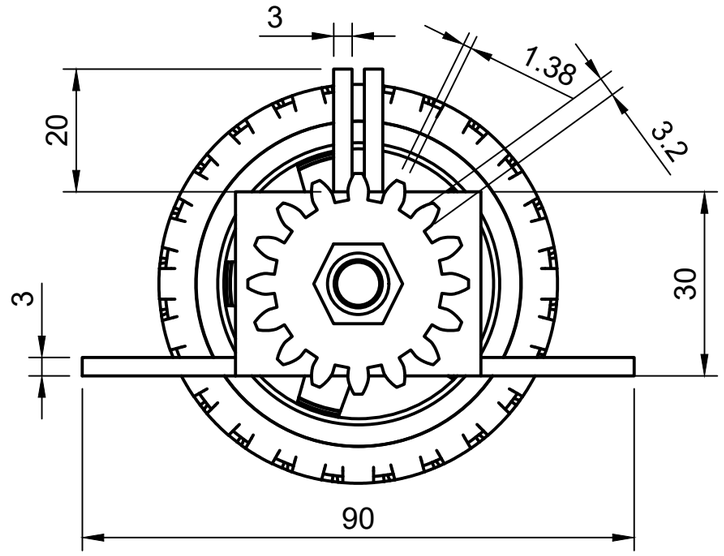

A-A (1:1)

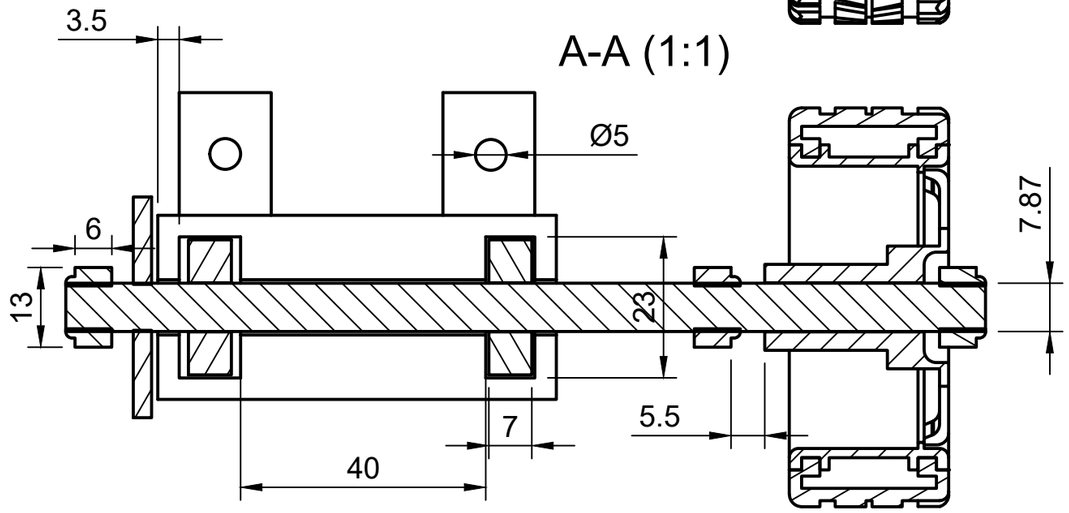

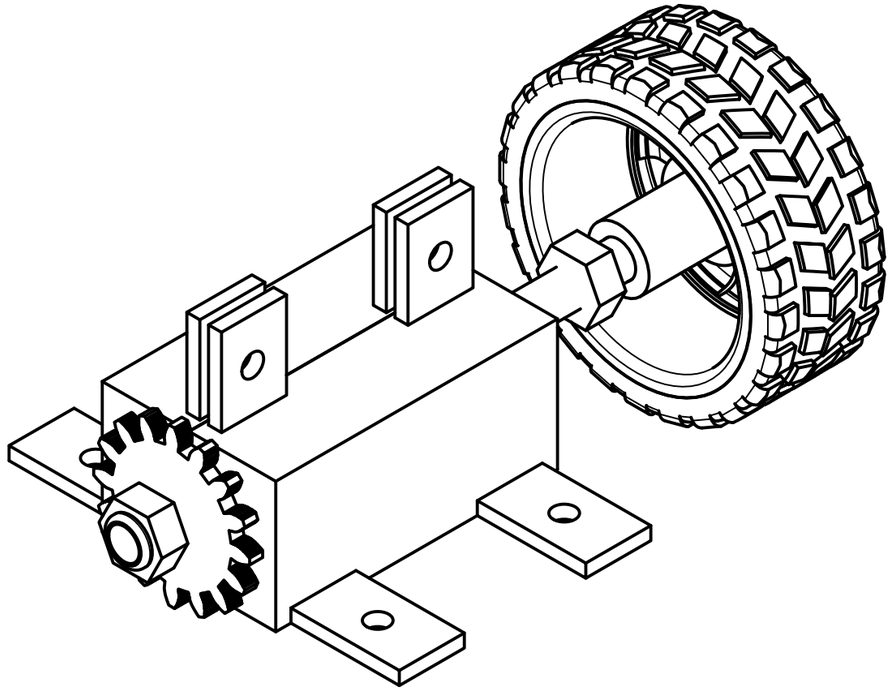

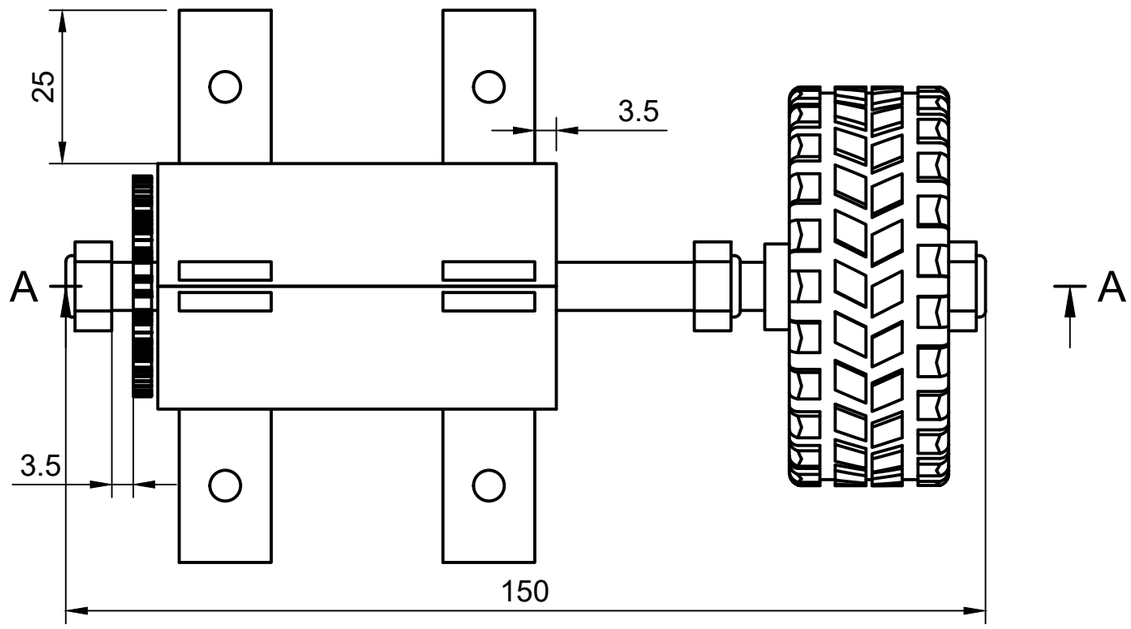

Dept.	Technical reference	Created by	Approved by
		Back Row G4NG 07/08/2022	
		Document type	Document status
		Title Active Wheels	DWG No.
			Rev. / Date of issue / Sheet 1/1