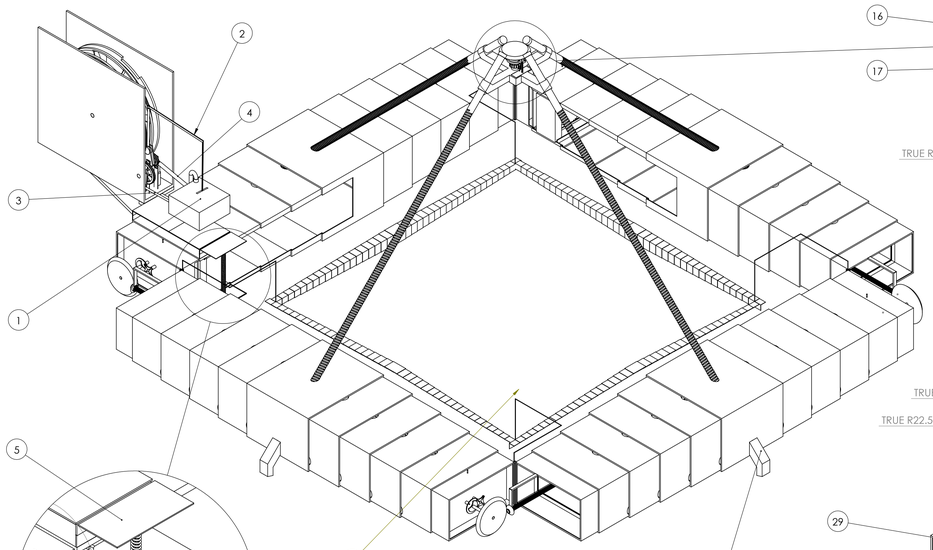

ISOMETRIC VIEW
SCALE 1:30

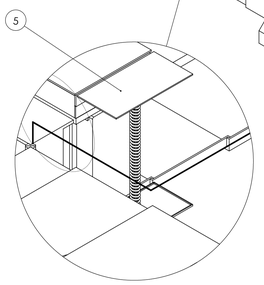

DETAIL A
SCALE 1 : 12

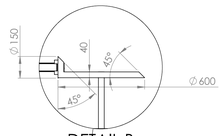

DETAIL B
SCALE 1 : 15

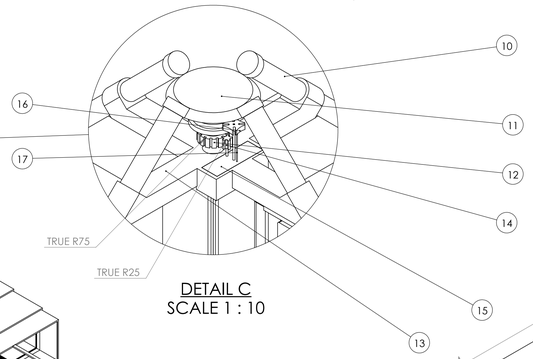

DETAIL C
SCALE 1 : 10

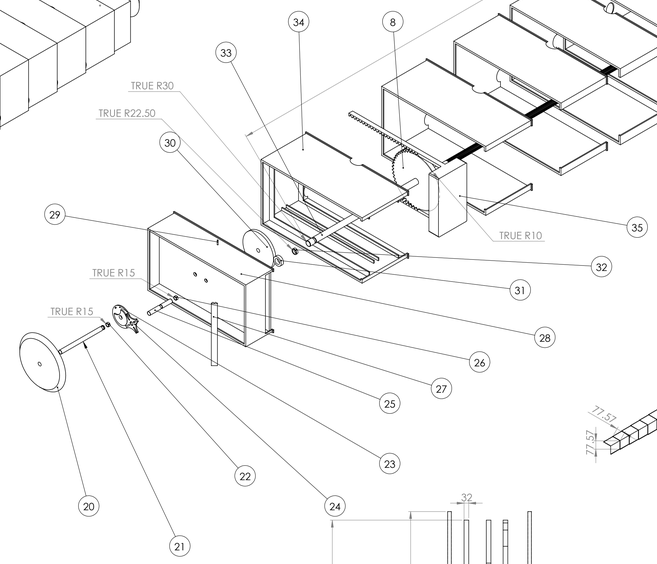

EXPLODED VIEW A
SCALE 1: 20

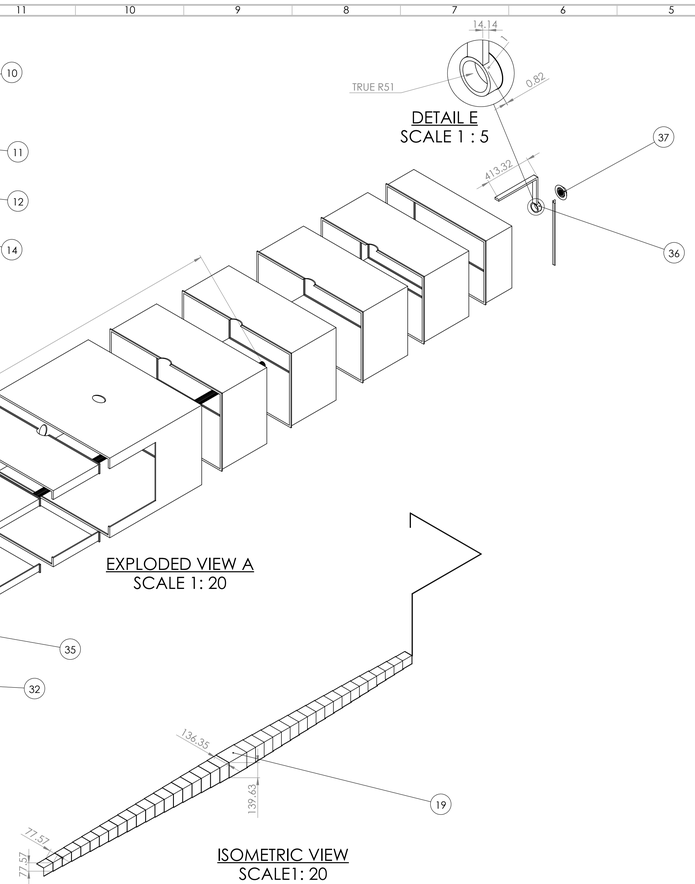

DETAIL E
SCALE 1 : 5

ISOMETRIC VIEW
SCALE1: 20

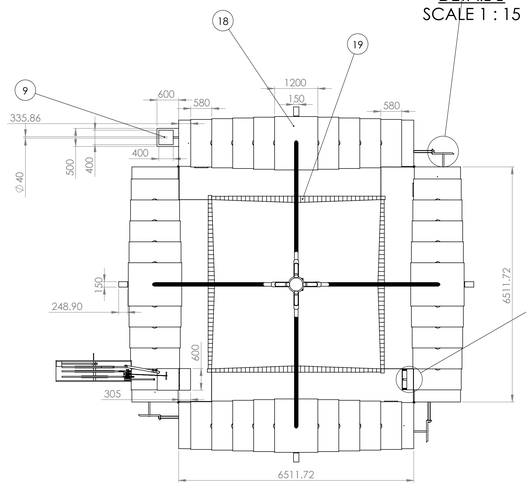

TOP VIEW
SCALE 1:60

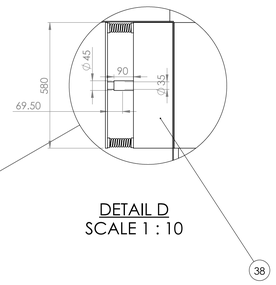

DETAIL D
SCALE 1 : 10

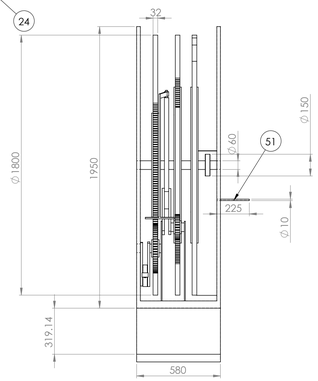

FRONT VIEW
SCALE 1:15

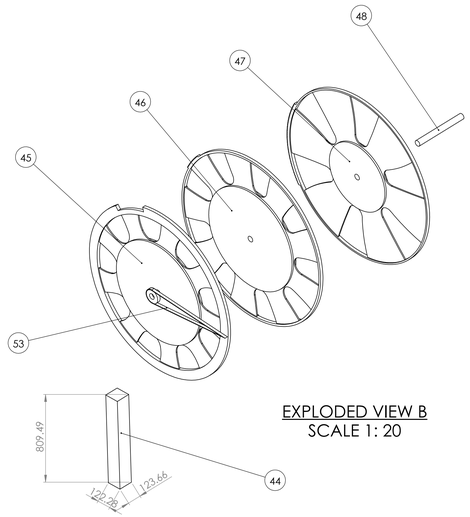

EXPLODED VIEW B
SCALE 1: 20

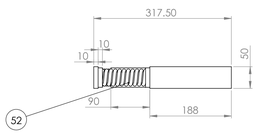

RIGHT SIDE VIEW
SCALE 1:5

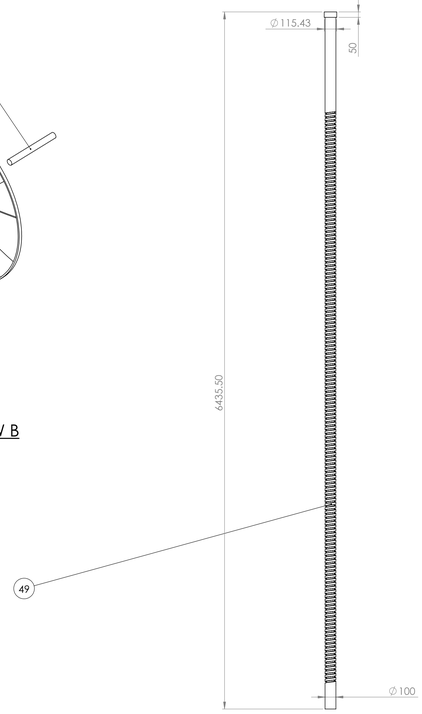

FRONT VIEW
SCALE 1: 20

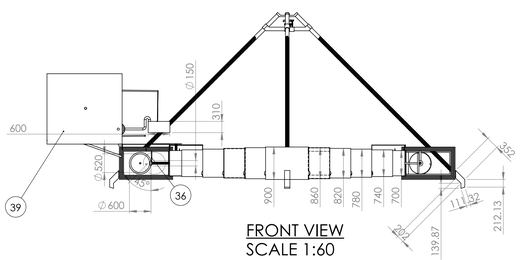

FRONT VIEW
SCALE 1:60

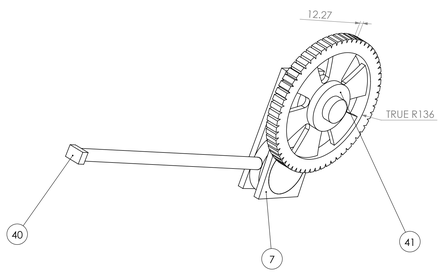

ISOMETIRC VIEW
SCALE 1:5

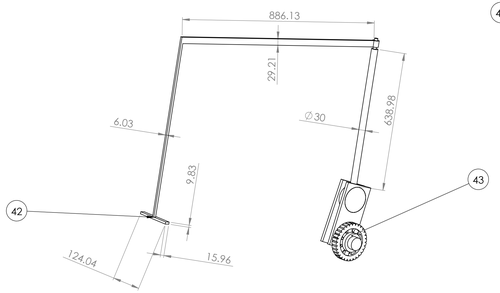

RIGHT SIDE VIEW
SCALE 1:10

PART NUMBER	PART NAME	QUANTITY
1	COOLER	1
2	LIFTING ROD	1
3	PUSHER ROD	1
4	WATER PIPE	1
5	SPRING LOADED PLATE	1
6	CONNECTING ARM	1
7	CONNECTING PLATE	2
8	PARTIAL PINION GEAR 25 TEETH	4
9	MOTOR	1
10	TOP OF SCREW	4
11	BEVEL GEAR	1
12	SPUR WHEEL	1
13	FRAME SUPPORT	1
14	SPUR PINION 14 TEETH	1
15	MOTOR	1
16	GENEVA WHEEL	1
17	CONNECTING SHAFT	1
18	ANTENNA BARRIER	4
19	ANTENNA BRACING ARM	4
20	BEVEL GEAR 60 TEETH HELIX ANGLE 10	3
21	CONNECTING SHAFT	4
22	CYLINDRICAL ROLLER BEARING A	4
23	GENEVA PIN	4
24	GENEVA WHEEL	4
25	CONNECTING SHAFT	4
26	CYLINDRICAL ROLLER BEARING B	4
27	CONTACT PLATE	8
28	BARRIER END PANNEL	8
29	LUBRICATION TUBE	4
30	SPUR GEAR 64 TEETH	4
31	SPUR PINION 16 TEETH	4
32	CYLINDRICAL BALL BEARING	4
33	SPLINED SHAFT	4
34	CASING FOR PUSHING PLATE	4
35	RACK 25 TEETH	4
36	LUBRICATED SLIDING RING AND BEARING	3
37	BEVEL GEAR 15 TEETH HELIX ANGLE 10	3
38	CONTACT LIMIT SWITCH	1
39	CASING FOR TIMING SYSTEM	1
40	PISTON PLATE	1
41	PUSHER PINION 60 TEETH	1
42	CONNECTION TO COOLER	1
43	LIFTING PINION 30 TEETH	1
44	MOTOR	1
45	WATER WHEEL	1
46	LIFTING WHEEL 30 TEETH	1
47	PUSHER WHEEL 60 TEETH	1
48	CONNECTING SHAFT	1
49	SINGLE POWER SCREW PITCH 35.2MM	4
50	FOOT	4
51	LUBRICATION TUBE	1
52	PRESSURE SPRING FOR CONTACT LIMIT SWITCH	2
53	BELT DRIVE CONNECTION TO MOTOR	1

UNLESS OTHERWISE SPECIFIED:
DIMENSIONS ARE IN MILLIMETERS
SURFACE FINISH:
TOLERANCES:
LINEAR:
ANGULAR:

FINISH:

DEBURR AND BREAK SHARP EDGES

DO NOT SCALE DRAWING

REVISION

NAME	STUDENT NUMBER	DATE
KATHERINE-MARIE ROBINSON	8459807	04/04/17
LESLEI JIANG	7730878	04/04/17
MACKENZIE MAY	8152503	04/04/17
MICHAEL BOTROS	8327615	04/04/17

TITLE:
PYRAMID ICE LODGING BUILDER

DWG NO. 1

A0

UNITS: MM

SHEET 1 OF 1