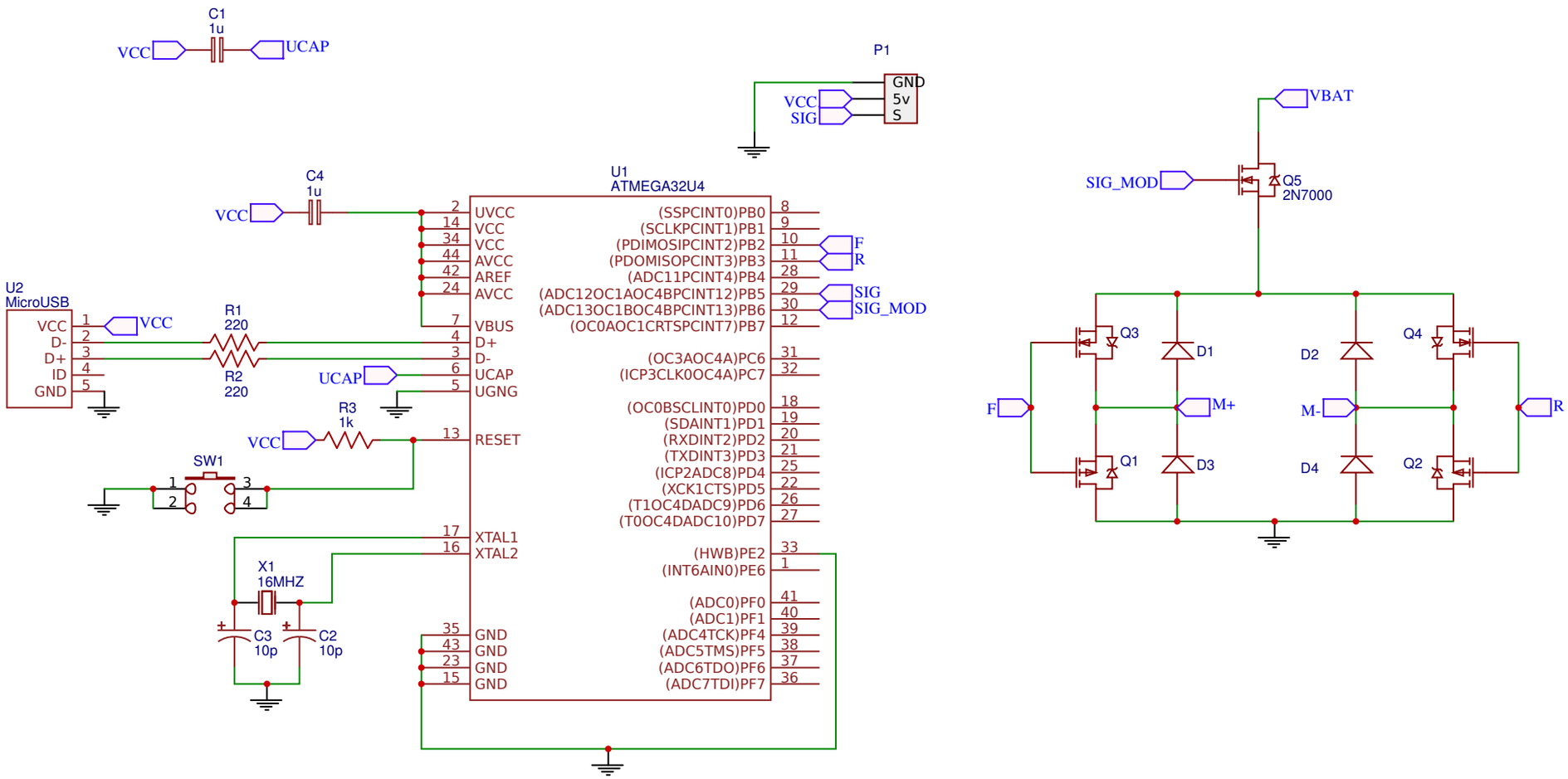

TITLE: New Schematic	REV: 1.0
Date: 2017-07-26	Sheet: 1/1
EasyEDA V4.5.6	Drawn By: mikobb221