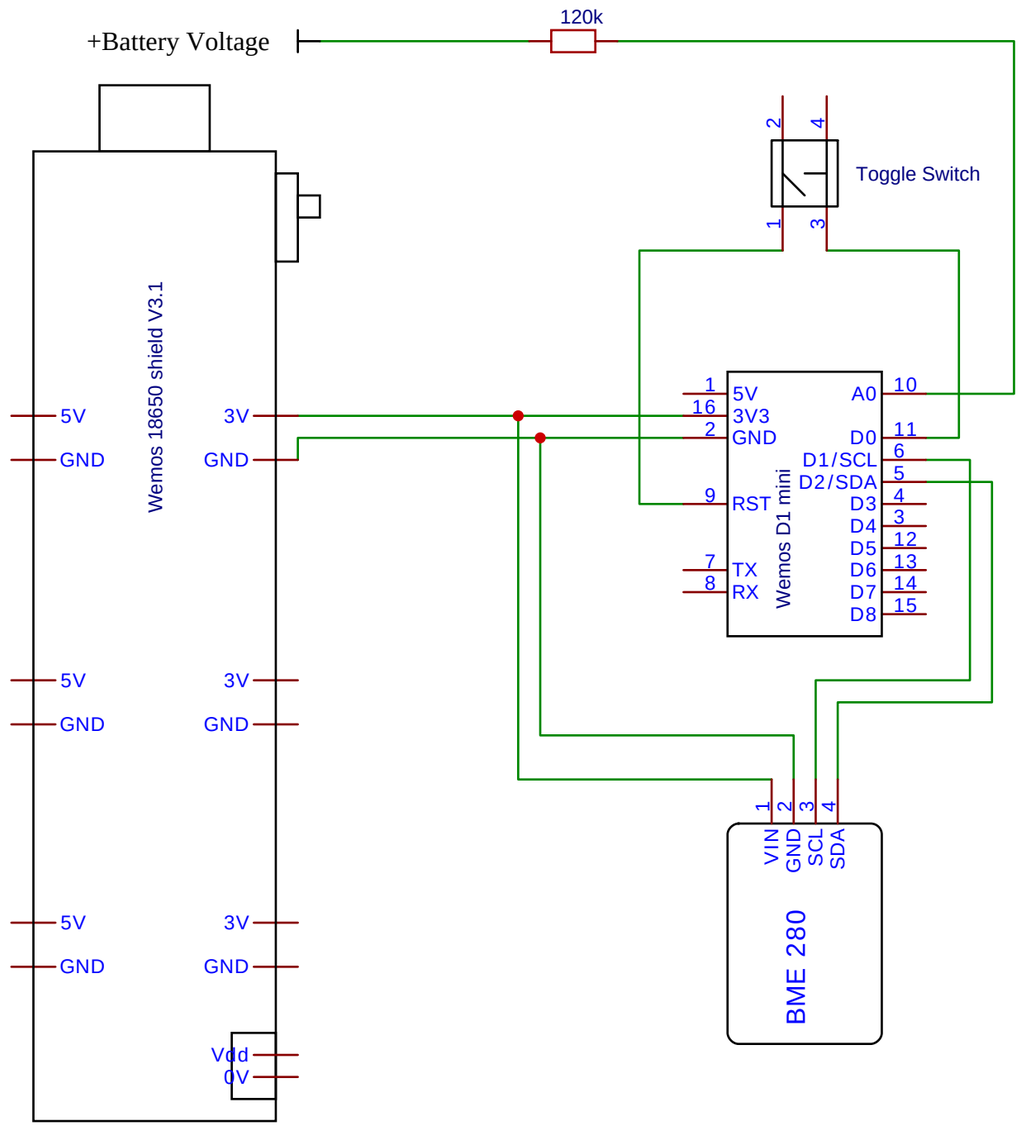

TITLE: Weather Station		REV: 1.0
EasyEDA	Company: Michael Brunner	Sheet: 1/1
	Date: 2020-12-23 Drawn By:	