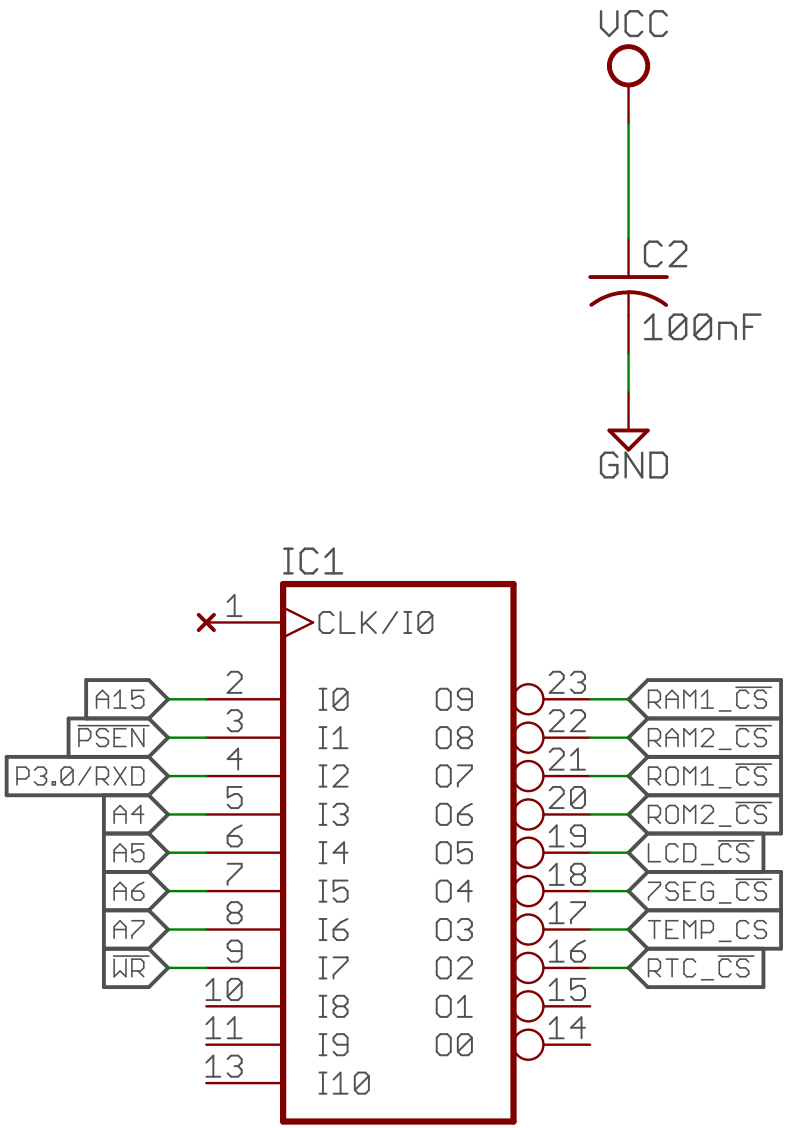

5/5/2017 1:11 PM f=2.00 C:\Users\Michael\Desktop\Microprocessor Design\Lab\8051 Project\Main.sch (DECODER_MODULE: Sheet: 1/1)