$98.75

BY WILLIAM McELROY

REVISED BY DAN ATCHESON

FENCES & RETAINING WALLS

REVISED

- Turn your estimate into a bid.
- Turn your bid into a contract.
- ConstructionContractWriter.com

Craftsman Book Company

6058 Corte del Cedro / Carlsbad, CA 92011

Acknowledgments

Rob Adair
Lubbock, TX

Lee & Annie Adams
Pittsboro, NC

Michael Atcheson
Lubbock, TX

John Azar
Azar & Co., LLC
Sarasota, FL

Don Bundock
Bundock Construction
Lubbock, TX

Dominic Cerrato
Cercorp Initiatives, Inc.
Bloomingdale, OH

Deborah Engel
Bend, OR

Ken Gallup
Florida Excavations, Inc.
Venice, FL

Dan Gauthier
Venice, FL

Dr. Bob Greenwald
Venice, FL

K.W. Grubbs
Sarasota, FL

Greg Haukap, LLC
Venice, FL

Richard Johnson
R.E. Johnson Enterprises, Inc.
Sarasota, FL

Frank Klemencic
Jerith Mfg. Co., Inc.
Philadelphia, PA

Rick Lopes
Chief, Public Affairs Office
Contractors State License Board
Sacramento, CA

Bill Nagle, Electrician
Venice, FL

Simpson Strong Tie Co., Inc.
San Francisco, CA

Max Schwartz, P.E.
Construction Author
Valley Village, CA

Gena and Tim Steelman
Decatur, TX

PFC Bryan Svalina
U.S. Army
Ft. Sill, OK

Martin Tickle
Bright Star Electric
Lubbock, TX

Ultrablock, Inc.
Vancouver, WA

Carol Urbancyzk
Almont, MI

Tiina Williams
Lahti, Finland

Gene Williamson
Principal, Lubbock
Independent School District
Lubbock, TX

Dedication:

This book is dedicated to all who help with,
or offer homes to, orphaned pets.

Looking for other construction reference manuals?
Craftsman has the books to fill your needs. **Call toll-free 1-800-829-8123**
Visit our Website: www.craftsman-book.com

Library of Congress Cataloging-in-Publication Data

McElroy, William.
Fences & retaining walls / by William McElroy ; revised by Dan Atcheson. -- Rev.
p. cm.
Includes bibliographical references and index.
ISBN 978-1-57218-275-2 (alk. paper)
1. Fences--Design and construction. 2. Walls--Design and construction. 3. Retaining walls--Design and construction. 4. Gates--Design and construction. 5. Construction industry--Management. I. Atcheson, Daniel Benn. II. Title. III. Title: Fences and retaining walls.

TH4965.M38 2012
717--dc23

2012017160

©2012 Craftsman Book Company 1st Printing 2024
Layout: Joan Hamilton. Cover design by Jennifer Johnson

Contents

1 Fence & Wall Specialties

The History of Fences 6
Modern Wall and Fence Building 7
Every Job Begins with a Sale 16
Fence Maintenance Contracting 16
Design and Architecture 17
Fence Rentals 17
Material Sales 19
Get Your License 20
Laws Governing Employers 28
Collecting Sales Tax 32

2 Layout & Design

The Finer Points of Design 36
Security Systems & Safety 42
Public Domain Access 43
Drawing the Plans 44
Ordering Materials 54

3 Wood Fences and Gates

Wood Varieties 57
Rough Cut vs. Milled Lumber 58
Moisture Content 59
Lumber Grading 59
Lumber Pricing 64
Fasteners and Anchors 64
Setting Fence Posts 70
Installing the Rails 72
Mounting the Board Stock 73
Wood Fence Designs and Variations 75
Wood Gates 81

4 Block & Brick Walls

Block Materials and Properties 91
Reinforcement 95
Laying the Block 103
Dry-Stack Masonry Walls 107
Brick Walls 108

5 Chain Link & Wire Fences

Chain Link 111
Woven Wire Fences 129
Electrical Grounding 137

6 Metal Fences, Gates & Railings

Build Your Own or Use Prefab Fencing? 140
Metal Gates, Latches and Hinges 142
Heavy-Duty Fences and Rails 144
Welding 145
General Information 158

7 Finishes

Protective Coatings Defined 161
Surface Preparation 164
Avoiding Problems with Coatings 165
Difficult Coating Jobs 168
Don't Paint Too Soon 170
Protect Against U/V Radiation 171
Coatings and Their Uses 172
When to Apply Coatings 174
Painting Tools of the Trade 174
Color 177
Keeping the Coating on the Fence 179

8 Troubleshooting & Repair
Maintenance Contracts 181
Is It Worth Fixing? 182
Fences 182
Walls 192

9 Wiring & Plumbing
Some Basic Definitions 198
Electrical Power and How It Travels 200
Converting AC to DC 201
Switches 201
Invisible Fences 202
An Electrician's Primer 203
Planning a Wiring Job 211
Plumbing 217
Maintaining Electrical and Plumbing Systems 220
Maintaining Gates and Security Systems 224

10 Retaining Walls & Stone Walls
Earthen Barriers 225
Wood Retaining Walls 226
Concrete Block 228
Pouring a Concrete Retaining Wall ... 231
Retaining Walls from Other Materials 233
Temporary Retaining Walls 236
Friction and Landslides 237
Design and Building Methods 238
Using Concrete to Reinforce Earthen Barriers 240
Water Pressure 241
Soil Properties 244
Stone Walls 245

11 Get Your Business Started Right
Your Business Specialty 254
What Makes a Business Successful? ... 256
Your Business Structure 256
You Supply the Startup Money 258
Find a Customer or Three 260
Effective Advertising 260
The Necessary Evils 268
Taxes, Taxes, and More Taxes 268
Insurance 270
Social Security 273
Business Paperwork 273
Financial Statements 275
Estimating Sheets 276

12 The Books You Keep
The Chart of Accounts 278
The Spreadsheet 280
Asset Records 282
Markup and Overhead 286

13 Sales & Contractor's Law
Sell Yourself 300
Ask for the Order 304
When Your Bid's Too Low 306
Add-Ons 309
Contractor's Law 311
Home Improvement Sales 312
Contracts 312

14 Safety on the Job
General Safety Regulations 321
Polluted Air 322
Excavation 322
Fire Extinguishers 327
Ladders and Scaffolds 327
Sealing Materials 331
Compressed Gas Storage 332

15 Estimating
Know Your Product and Its Value ... 340
Plan Your Jobs Carefully 341
Labor Costs 348
Legal and Administrative Costs 349
New and Unusual Jobs 353
Can You Assign Unit Costs? 354
When You Lose a Bid 361
The Take-Off Forms 362
Manhour Tables 368

16 Contractor's Math
Conversion Factors 384
Working With Percentages 385
Adding and Subtracting Fractions ... 387
Algebra 389
Ratios and Proportions 391
Multiplying Negative Numbers 392
The Pythagorean Theorem 393
Working With Plane Figures 395
Surface Areas 398
Travel Time 399
Fence Picket and Board Spacing 400
Working With Volumes of Solids 401

Glossary 409

Chapter 1

Fence & Wall Specialties

IT'S HARD TO IMAGINE a world without fences. We need them to keep some things in and other things out … things *and* people. We need them to preserve our privacy. A world without fences? Not likely. And that's why fence building is good business for construction contractors. Nearly every significant new construction project includes fences and walls. So if you're qualified to build fences and retaining walls, there will be work to bid on for nearly every job. That can help build a nice extra profit into every project you handle.

This book is intended to be useful for a wide audience. Maybe you're already a licensed contractor. Maybe you're working in the trade on the payroll of a contractor. Maybe you're building your first fence. Or maybe you're a student who wants to learn fence and wall building. In any case, this manual has the information you need. You'll learn about all kinds of fences, gates, retaining walls, sea walls, and railings. We'll cover the most familiar types and styles of fences and walls, and several unusual types. I'll describe all the common construction methods and dozens of materials. You'll see what kind of equipment you need to build each type of fence. And I've included a section on estimating costs and manhours.

Established contractors will learn the fine points of fence building — including suggestions on dealing with customers, employees, building inspectors and the IRS. After reading this book, you'll probably want to pass it along to a friend, apprentice, or new employee.

If you're new to fence building and estimating, you should have no trouble following my explanations. I'll take it step by step and include plenty of photos along the way. That should make it easier to learn the essentials.

For the homeowner who's building a fence for the first time, I've provided simplified designs and construction techniques. The chapter on troubleshooting and repairs can help you avoid mistakes others have made. You'll also learn to repair and maintain existing fences and walls. I've included a glossary of terms, so when you talk to suppliers and contractors, you'll be speaking their language.

If you're an apprentice studying for your license, this book is for you. I wrote it with the California C-13 Fence Contractor's license exam in mind. Between the covers of this manual you'll find answers to nearly all the questions on the exam. The business chapters will help you set up your own contracting business and keep you from making expensive mistakes. The contractor's math chapter will teach you simple techniques for approaching math problems that you're sure to face on the job.

Teachers can use this book as a course manual. It covers everything from setting up a business and selling and preparing legal contracts to estimating and building fences and walls. Throughout this book, I've tried to use plain, conversational English that's easy for students to follow. And all readers will benefit from the chapter on safety.

Now that you know where I'm heading, I'll start from the beginning.

The History of Fences

The first true fences were probably barriers to keep domesticated animals in place. Early tribes were nomadic hunters who traveled from place to place; fences didn't have to be any more than temporary. As time passed, people learned to grow crops and domesticate animals. At that point, they needed more permanent ways to mark off their fields and corral their livestock. They made fences from stones or trees cleared from their planting fields. They made corrals by suspending vines and ropes between logs and trees — the predecessor of the barbed wire fence.

"As time passed, people learned to grow crops and domesticate animals. At that point, they needed more permanent ways to mark off their fields and corral their livestock."

Early fences were also used for protection. Stone piles or logs could protect possessions and families from theft and attacks. Stones were laid in horizontal courses and held in place with mud. The first mortar was dried mud or earth. Even in those early days, fence building must have become a skill to be learned and passed down from generation to generation.

In the 1800s, we learned to draw heated metal through a small hole, turning it into wire. That's a fine material to fence in animals and fence out trespassers.

In parts of the world where trees and rocks weren't readily available, people had to make fences out of soil. Ordinary dirt mixed with water could be molded into a building block; but dried blocks of dirt eroded easily in the rain. On the other hand, clay from river banks and ponds held up better when wet, so it was used to make durable adobe block. Eventually, someone discovered that heating clay fire-hardened and waterproofed the blocks.

People are very adaptable. In their search for homes near food, entertainment, work and riches, they sometimes built homes on the edges of mountains, oceans, and rivers. But nature is unpredictable. Mountains erode, oceans rise, and rivers flood. That's where retaining walls, sea walls, and dikes entered the picture. Concrete made all that possible. Mix cement with sand, gravel and water; then form and cure the mix to hold back that mountain, ocean, or river.

Even though people are independent by nature, they need each other. They formed groups that developed into towns and cities. As people moved closer together, the urge to maintain privacy increased. An industry matured and prospered — the fence-building industry.

Modern Wall and Fence Building

To compete effectively as a fence and wall builder, you need a wholesale materials supplier who will sell to you at a discount. You also need a vehicle and certain tools. And you need to know how to construct sound fences and walls in a legal manner, and how to make money doing it. That's what this manual is going to teach you.

Let's begin with a discussion of the various types of fence contracting specialties and the equipment you'll need for each.

Block Walls

Block walls are common in the southwestern United States because the materials are readily available in that locale. The principal materials include adobe or concrete blocks, steel reinforcing bars (rebar), mortar and lumber. Figure 1-1 shows a typical block wall in a residential development.

Here's a list of the tools and equipment you'll need to get started in block wall construction:

- ¾- to 1-ton truck
- motor-driven concrete mixer
- mason's hammer for cutting block

Figure 1-1
Concrete masonry unit (CMU) privacy wall

- circular saw for cutting forming lumber
- trowels for spreading mortar
- masonry saw
- rebar cutter
- rebar bending machine
- crowbar
- transit for laying out wall (optional)
- sledge hammer
- claw hammer
- chalkline
- cord and line blocks
- mortarboard
- assortment of screwdrivers and wrenches
- levels, 18 inch and 6 foot
- wire cutters to tie rebar
- drill and assortment of masonry bits
- protective clothing and glasses
- scaffolding (for walls over 6 feet high)

Courtesy of Don Bundock

Figure 1-2
Concrete panels that replicate natural stone

This list assumes that your supplier will deliver materials to the jobsite and will provide a forklift. I'm also assuming that you'll subcontract the trenching work to someone with a backhoe. And you'll need a concrete contractor to lay the foundation.

Sometimes you won't be able to get a concrete truck close to the jobsite. In that case, you'll have to pump the concrete through a large hose (about 4 inches in diameter) from the truck to the wall location. Pumping also works well when pouring into narrow, formed-out foundations or wall cavities.

Most concrete transit mix trucks hold about 9 cubic yards of concrete. You'll be charged by the cubic yard, of course. But if you order less than 9 yards, you'll probably have to pay a surcharge for the short load. Still, I order transit mix concrete for any job that needs more than 3 cubic yards at once; less than that, and you're probably better off mixing it yourself on the jobsite.

Brick Walls

Brick walls offer durability and a wide range of design options, and require about the same equipment as block walls — you'll just be working with more, but smaller, building units. Brick work is popular nationwide, but more common in the Northeast. Brick is also used extensively in the Southeast where Georgia clay abounds.

For repairs or additions to existing brick walls, brick staining offers a cost-effective alternative to searching for an exact color match.

Stone Walls

Stone walls can be made from natural or artificial stone. Natural stone walls are common in rural areas where stones are a waste product from land clearing operations. Stone wall builders don't need any special tools except a tractor, a wagon to cart the stones, and a strong back. When laying stone walls in mortar, you'll need mortar mixing equipment. Stone walls usually require a foundation and, therefore, the help of a concrete contractor. Figure 1-2 shows a wall made from colored precast concrete panels that replicate natural stone. See Chapter 10, Figure 10-33, for a photo of a wall built with natural stone.

Figure 1-3
Stone veneer wall

Stone veneer can be molded or cut into so many shapes and colors that it's very popular for use with many different architectural styles. It's usually applied over wood frame or concrete block walls. See Figure 1-3. The contractor who frames the wall or lays the block may also apply the veneer. The tools required for applying stone veneer are the same as for building block walls. We'll discuss veneer walls in more detail in Chapter 10.

Poured Concrete Walls

Poured concrete walls are relatively expensive to build, but they make up for it in strength. You'll need forms, usually made of ¾-inch waterproof plywood (plyform), fiberglass, or sheet metal. See Figure 1-4. The forms come in sections that you can assemble, remove and reuse easily. You'll need a concrete pumping service to pump concrete from the truck to the forms. You'll also need a source for rebar to reinforce the concrete.

For some jobs it's cheaper to use prefab wall sections. If this is your choice, you'll need a crane or hoist to place these sections in position.

Figure 1-4
Poured concrete wall forms

Wire Mesh Fences

It's easy to get into the wire mesh fence contracting business. Wire mesh fencing is common in rural and semi-rural areas where ranchers have to enclose animals and fowl rather than restrict access to people. These are the materials you'll need to build wire fences:

- ½-ton truck, 8-foot bed or longer
- hand truck for moving rolls of mesh
- gas-powered post hole digger
- block and tackle or stretcher
- wire cutters
- wheelbarrow
- gas-powered concrete mixer
- 100-foot-long tape measure (minimum)
- 6-foot level
- transit to lay out and level long sections
- stringline and batten
- shovel, pick, hoe and manual post hole digger
- assortment of screwdrivers and wrenches
- 2-pound hammer

Unless there's a high demand for wire mesh fencing in your area, I suggest you handle barbed wire and chain link fencing in addition to wire mesh.

Barbed Wire Fences

In rural areas, ranchers use barbed wire to contain cattle on rangeland. It's also used to mark off fields, although any hunter can climb through it. See Figure 1-5. Sometimes you'll find barbed wire along the top of chain link fences to discourage people from climbing them.

Startup costs in the barbed wire fence business are the same as those for wire mesh fence contracting, as is the equipment. The wire stretcher is a different design, however, and you'll need a hammer or two.

Chain Link Fences

You'll find chain link fences mostly in urban commercial areas. They're effective at keeping intruders out of storage areas, off factory grounds and out of streams and lakes. They may be used inside factories to fence off equipment or inventory. Chain link security fences are usually 8 to 10 feet high. Smaller fences, in the 4- to 6-foot range, are used to define residential lots.

Chain link is very versatile: It's used to pen animals, form baseball fields, and surround swimming pools, tennis courts, children's playgrounds and parking lots. You'll need about the same equipment as for wire mesh fencing. For work inside industrial buildings you'll need some concrete drilling equipment, since most warehouse floors are poured concrete. Your truck should have a rack for carrying 20-foot sections of pipe.

Figure 1-5
Barbed wire fence

Wood Fences

Here is where style takes over. There are about as many types of wood fences as there are lumber dimensions. Fortunately, most wood fence jobs will require the same basic equipment:

- ½-ton truck, 8-foot bed or longer
- manual or gas-powered post hole digger
- power saws and hand saws
- electrical generator for working in isolated areas
- air compressor for nail gun
- assortment of screwdrivers and wrenches
- stringline and batten
- shovel, axe, pick, hoe, and manual post hole digger
- hammers: claw and sledge
- drill and drill bits
- transit (optional)
- 2-foot and 6-foot levels
- gas-powered concrete mixer
- wheelbarrow
- assortment of woodworking chisels

You can build these fences from scratch, or buy and install prefab fencing. You'll usually need to buy materials, but on some rural jobs you might use timber cut on the site. For this type of work you'll need a chainsaw, log splitter, and possibly a small bulldozer (which you'll probably choose to rent).

Figure 1-6
Ornamental metal fence

Constructed Metal Fences

These fences include those made from ornamental iron or pipe. Ornamental iron is very popular with homeowners, and most of this work will be residential. Figure 1-6 shows some typical ornamental iron fencing.

Metal security fences and gates are common around commercial buildings, while pipe fences usually serve to restrain animals — mainly horses and cattle. They're also used as safety railings where there's danger of people falling, such as balconies and scenic lookouts along highways. Here are the tools and equipment you'll need for metal fence construction:

- 1-ton truck (or larger)
- gas or gas-powered electric welder and tips
- gas-powered post hole digger
- metal-cutting saws
- drills for wood, concrete, and metal
- gas-powered concrete mixer
- assortment of screwdrivers and wrenches
- hammer and mallet

Figure 1-7
Fence built from mixed material types

- shovel, pick, hoe, and manual hole digger
- transit (optional)
- stringline
- 2- and 6-foot levels
- metal grinder or drill attachment
- paint and brushes for touchup

Highway guardrails are another common metal fencing application. If you're doing highway work, you may also need a bulldozer.

Multi-Material Fences

Building walls and fences that combine multiple styles or material types can add beauty and functionality. One common combination is a tempered glass or acrylic fence along the top of a masonry wall. Figure 1-7 shows PVC lath installed under a PVC fence. This offers extra privacy and also keeps the dog from getting out of the yard.

Siding and Stucco

You can use any kind of siding material to build fences: aluminum, steel, vinyl or stucco. First build a conventional wall frame from 2 x 4s or 2 x 6s. Then use the siding material as a facing. All you need are basic saws, drills, and hand tools.

Hedges and Landscape Fencing

For a fence that blends well with nature, you can use trees and shrubs — by themselves or in combination with other wall and fence styles — to form barriers. A well-maintained hedge is inexpensive and environmentally friendly: It won't rust and never needs painting. You do have to know what plants work best in your climate. A trip to a local nursery or some Internet research will help in that regard. Cost for tools and equipment is usually minimal.

Retaining Walls

Retaining walls prevent soil or falling rock from intruding upon occupied areas. They're also effective wind and noise barriers. Many retaining walls are built under government contracts. If you plan to bid on public works jobs, you'll probably find plenty of retaining wall work available in your area.

Equipment needed to build retaining walls tends to be expensive. You don't need many hand tools, but for most jobs you'll probably need a tractor-loader backhoe and a dump truck. You're generally better off renting the necessary equipment unless you intend to specialize in this type of work.

"Dirt is cheap, but lives aren't. You can't afford to have your wall collapse."

In most cities and counties, retaining walls require building department approval. The inspector wants to be sure the wall is strong enough to support the load. Except for small retaining walls, the building department isn't going to determine what's safe and what isn't. Instead, they rely on the opinion of the civil engineer *you* hire to prepare the plans. The engineer's stamp on the plans certifies that the wall meets accepted engineering standards. That's important. Dirt is cheap, but lives aren't. You can't afford to have your wall collapse.

Once the wall is finished, the slope above the wall should be landscaped to help hold the soil in place. You should be ready to suggest landscaping materials that will hold your man-made hills together.

Sea Walls

If you're near an ocean, lake or river, you'll probably have the opportunity to bid on sea walls. Sea walls, built to prevent damage from rising water, are made from stone, concrete, treated wood piles, sheet metal, fiberglass composites, or vinyl.

Every Job Begins With a Sale

There won't be much work to do until you start selling jobs. Selling is an important part of the business. Consider two questions:

1. Can you afford to hire a fulltime salesperson?
2. If not, can you afford to spend time selling jobs rather than building or supervising a crew?

My advice is to let the builders build and the salespeople sell. Unless you've got a special talent for sales, find someone who likes meeting the public and knows (or is willing to learn) something about fence building and retaining walls. Many people can learn to be good salespeople and enjoy selling. Favor someone who can make a sketch of what they're trying to sell. Some training in drafting or architecture is an advantage.

Your salesperson (or salespeople) should work on commission, earning more when they close more jobs. Commissions range from 5 to 15 percent of the contract price, often with a weekly draw. In Chapter 13, I suggest sales techniques that can keep your company busy and prosperous.

Fence Maintenance Contracting

All fences need repair or maintenance at some point, which makes fence maintenance contracting a good starter or add-on business. As a starter business, it's a good way to get established while you learn the ins and outs of the fence contracting business. There is definitely a market for this. I took a multitude of photos of fences for this book, and many of those fences clearly needed repair. Of course, you need to be a good handyman, and proficient in the use of hand tools. Start by looking for work in older neighborhoods.

"You can also offer limited emergency service on a per-call basis when severe damage has occurred."

Some fence contractors offer maintenance plans to customers with existing fences and walls. That typically entails coming by on a regular basis to inspect, repair any minor damage, oil hinges, tighten screws and bolts, and re-nail loose boards. You can also offer limited emergency service on a per-call basis when severe damage has occurred. This could be necessary after a wind storm, or when someone has run their car through a fence. Your service could also include periodic painting or waterproofing of customers' fences.

Your startup cost for this type of service is small: a few basic hand tools, a small inventory of materials, and a pickup truck or van. Who do you sell to? Mostly business and local governments; but many homeowners will also hire you. They either can't or don't want to bother doing it themselves.

On fence repair jobs, I recommend that you charge by the hour and add the cost of materials. Charging a fixed fee for this kind of work is usually a mistake. You'll often find hidden damage. Chapter 8 has more information on fence repairs and maintenance.

Design and Architecture

Anyone who's making a living in the fence business should see the difference between a fence that adds beauty to a home or neighborhood and a fence that's an eyesore. In many cases, you're going to be the designer — the person who recommends the fencing material *and* design. I've seen too many fences and walls that just didn't complement the property. Don't make that mistake.

I've seen many others that fell apart way too soon due to poor design. The designer didn't consider how the fence would be used and the problems that came with the site. Don't make that mistake either. The chapters that follow will help you select designs and materials to make attractive, well-engineered walls and fences.

Drafting and Layout

When you prepare plans for a fence or wall, your focus should be on technical accuracy. You have to take the designer's ideas and sketches and turn them into working blueprints that show, in detail, how all the parts fit together. To do that, a year or two of drafting experience and familiarity with fence building are essential.

Fence Rentals

Fence rental is good business in areas where many commercial or industrial buildings are under construction. Construction contractors rent fences to protect their equipment and tools on a jobsite. Insurance companies and local governments favor fenced construction sites because fencing helps keep vandals and kids off the site at night and on weekends.

Farmers and ranchers use temporary fencing to hold livestock during roundup. Businesses use it when they have to secure inventory outdoors for a period of time.

Most rental fences are chain link. You install them the same way you do permanent chain link fences, but without cementing the posts into the ground. Some varieties are freestanding, with concrete or metal panel stands that require no digging.

When renting out fencing, charge from a third to a seventh of your cost for the materials — the mesh, posts, and gates. This is based on the expectation that you can rent the same materials at least seven times, and perhaps as many as 20 times.

Charge your regular rate for delivery and installation, based on soil conditions and how level the site is. Some companies charge the same whether you rent the fence for a week or a year. You'll probably want to include a separate charge for removal.

If this sideline business interests you, check with some of your local competitors for prices. Use them as a guide to see whether you can make money renting fences.

Fence-Building Equipment Rentals

If you're in the fence-building business, consider renting out equipment that's sitting idle. Other contractors, subcontractors, and property owners may need a good source of specialized equipment. Require a deposit, valid identification, and a rental contract from your customers. In some states, your customers will need special operators' licenses to use heavy equipment such as backhoes or bulldozers.

Here are some examples of the equipment that's usually in demand:

- backhoe
- bulldozer
- power post hole diggers
- outdoor heaters
- concrete mixers
- trucks
- tractors
- stretchers
- electrical generators
- air compressors
- airless sprayers
- power washers
- specialized small hand and power tools

The daily rental rate for most small pieces of equipment is usually about 5 percent of the purchase price. That means you can recover the purchase price once equipment is rented about 20 times. But some equipment may only rent out a few times a year. So it may take several years to earn a decent payback. For weekly and monthly rentals, it's generally appropriate to offer discounts in proportion to the rental period.

Insurance will be important if you rent fence-building equipment. Make sure you're protected from liability and loss due to equipment damage or theft. To be competitive in this business, you'll probably need to invest several hundred thousand dollars in equipment. After the initial payback, you'll keep between 40 and 60 percent of each rental dollar after expenses. It's a good business if you can afford to get into it.

Material Sales

Here is another good money-maker for fence contractors: sell materials to other fence contractors. This works well if you're already stocking both raw materials and some hardware. You just need to offer delivery to the site and off-loading services. Many lumberyards carry some fencing materials, but, as you'll see in later chapters, a lot of materials are unique to fence building.

"To be competitive as a fence material dealer, you need to make a substantial investment … several hundred thousand to a few million dollars."

You can supply just one line — wood fencing, for example. Or you can be a full line supplier offering block, brick, metal, wood, chain link and others. To be competitive as a fence material dealer, you need to make a substantial investment … several hundred thousand to a few million dollars. It's easier to accumulate capital like that if several people pool their resources and form a corporation. I'll tell you more about that in Chapter 11.

You might also consider prefab fencing as a business venture. Some fencing material dealers assemble and sell prefab metal, concrete, vinyl, composite or wood fence sections. You'll need a few good designs, a materials supplier, a building, and tools. You'll also need a way to deliver the completed sections to your dealers' or customers' locations. Also keep in mind that many companies already offer prefab fencing. Check out their designs and prices to be sure you can either build a better product or build the same product at a lower cost.

As you can see, the fencing and retaining wall business offers a wide range of opportunities through specialties or branch businesses. Many states now require that contractors be licensed. And all companies that have employees need to know something about labor laws. I'll cover those subjects next.

Get Your License

All states that require contractors to be licensed have contractor license schools. Some only teach the test, some only teach the basics of construction, and some may teach both. Before you invest time and money in a course, find out exactly what's offered. Ask questions like:

- Do they pre-test you to find out if you even qualify to become a licensed contractor? Many don't. All they want to do is sell you some study materials.
- Do they tell you in advance just how much money the school and the license will cost? If they don't, you could be in for a shock later.
- Do they teach you the trade using hands-on experience? Not many do. Most assume you already know how to build a fence or wall.
- Will they help you find that first job after you get your license? That first flight from the nest isn't always easy.
- Will they guarantee success in passing your test? Some will refund your money if you don't pass after you take the test twice.
- Do they teach a section on contractor's math? Questions on this subject will be included in most state tests.

How Much Does a Contractor's License Cost?

The schools that teach only the test are usually the least expensive. You get an average of 15 hours class time over a few weeks, several manuals, and sample tests to take. Most schools will allow you to retake the course for free if you fail the state exam, and will even refund part of your fee if you fail the state exam three times in a row. Make sure your contract covers restrictions and refunds.

Schools that teach a trade might charge thousands of dollars for the course. If you're going part-time, plan on spending your evenings and weekends studying and building for at least six months. There are a few fulltime schools that will teach you what you need to know in three to four weeks.

In addition to classroom training, there are plenty of Internet or self-study courses, materials and computer programs designed to help you prepare for license exams.

Check these schools and programs out carefully before you commit to one. Your state consumer affairs office or contractor's license board can tell you if a school is legitimate.

The license itself can cost anywhere from a few dollars to several hundred dollars, depending on the state. California charges a flat fee for the first classification, and a lesser amount for each additional classification or specialty.

Some states will require both a license and a *contractor's license bond*. If you default on a job, abandoning it before the work is finished, the state can revoke your license and the bond proceeds are available to compensate the owner. You may also have to show proof that you have enough *working capital* to support a contracting business. Working capital is money available to pay for labor and materials.

Many county and local governments will require that you post a bond when you bid on work under a government contract. Usually both a *bid bond* and a *completion bond* are required. The bid bond is submitted with the bid. It guarantees that you'll sign a contract to do the work if your bid is accepted. The completion bond guarantees that you'll complete work identified in the contract. Bid and completion bonds are written by insurance companies specializing in this type of work.

Most cities require contractors doing business in their city to have a business license. The license is usually a set amount plus a tiny fraction of your estimated gross receipts in the city for the coming year.

Prove It

Can you prove you know your trade? Along with your application for a license, many states now require that you submit proof of prior experience. For example, California requires a *Certification of Work Experience*, as shown in Figure 1-8.

You may substitute college-level education or union apprenticeship for construction experience. You can also substitute building your own home or owning an apartment or condo complex in which you do all your own maintenance. However, these substitutions are sometimes prorated. For example, building your own home may only count as three months' experience toward the requirement. On the other hand, apartment and condo complex owners generally get full credit for their years of ownership.

Of course, every state can set its own requirements for a fence contracting license. Check out the requirements before you invest a lot of time and money in something for which you may not be qualified. Even if you feel qualified, the license board may not agree.

The Contractor's License Application

Where do you apply for your contractor's license? Do an Internet search or look in your telephone directory under the name of your state. If there isn't a

CONTRACTORS STATE LICENSE BOARD STATE OF CALIFORNIA
9821 Business Park Drive, Sacramento, CA 95827
Mailing Address: P.O. Box 26000, Sacramento, CA 95826
800.321.CSLB (2752) | *www.cslb.ca.gov* | *CheckTheLicenseFirst.com*

Certification of Work Experience

Please read the General Information on the previous page before beginning this form.

The qualifying individual from Page 1 of the application must complete the information in Part 1 below; then, the certifier (person certifying the experience) must complete Part 2. The experience must be verifiable through payroll records or similar documents. If additional space is needed to list the trade duties, please attach a separate sheet that must also be signed under the same certification statement contained below in line 9.

Use a separate form for each employer or work setting. If you need additional forms, please make a copy of this blank form or visit CSLB's website to print the form.

Please type or print neatly and legibly in black or dark blue ink – pencil is not acceptable.

FORMS CONTAINING STRIKEOUTS OR MODIFICATIONS MAY NOT BE ACCEPTED. Corrections must be initialed by the certifier.

PART 1 – QUALIFYING INDIVIDUAL (APPLICANT) INFORMATION

The qualifying individual must complete Part 1 in its entirety before the certifier completes Part 2.

1. QUALIFIER'S FULL LEGAL NAME Last First Middle

2. BUSINESS NAME OF COMPANY WHERE EXPERIENCE WAS GAINED – OR, IF YOU WERE SELF-EMPLOYED, LEAVE THIS SPACE BLANK AND CHECK THIS BOX ❑ *(If you checked the box, skip line 3 and go to line 4.)* | LICENSE NUMBER OF COMPANY WHERE EXPERIENCE WAS GAINED

3. COMPANY'S BUSINESS STREET ADDRESS Number/Street Only – **NO** P.O. Boxes City State ZIP Code

4. WAS THE EXPERIENCE OBTAINED WORKING ON YOUR OWN PROPERTY AS AN **OWNER-BUILDER** *(see previous page for definition)*? ❑ Yes ❑ No
If you checked "Yes" above, use the Owner-Builder B-General Building Construction Project Experience form to provide information on completed projects.

PART 2 – WORK EXPERIENCE AND CERTIFICATION STATEMENT

The certifier must complete Part 2 in its entirety after the qualifying individual (applicant) has completed Part 1.

5. APPLICANT'S **JOURNEYMAN-LEVEL OR HIGHER** TIME-BASE WORKED IN SPECIFIC TRADE DUTIES (check one): ❑ FULL-TIME ❑ PART-TIME } FROM _____ (Month/Day/Year) TO _____ (Month/Day/Year) = FOR A TOTAL OF _____ YEAR(S) and _____ MONTH(S)
(List **ONLY** journeyman-level or higher experience that was obtained in the applicable classification.)
(Do not claim credit for full-time work if applicant worked only part-time or if trade duties in requested classification were only one component of entire job. For example, if applicant worked half-time in specific trade duties for six (6) years, write "3 years" in the space above.)

6. IN THE SPACE BELOW, LIST ALL SPECIFIC TRADE DUTIES APPLICANT PERFORMED OR SUPERVISED IN THE CLASSIFICATION FOR WHICH THEY ARE APPLYING. ***PLEASE REFER TO THE DESCRIPTION OF CLASSIFICATIONS DOCUMENT FOR ASSISTANCE.*** *(Do not list office work or individual project names.)*

7. My business relationship to _____ (Name of Qualifying Individual *(Applicant)*) is or was *(check all that apply)*:
❑ Employer ❑ Contractor (License Number _____) ❑ Foreman or Supervisor
❑ Journeyman ❑ Fellow Employee ❑ Union Representative ❑ Business Associate

8. CERTIFIER'S STREET ADDRESS Number/Street Only – **NO** P.O. Boxes City State ZIP Code

PHONE NUMBER ( ) | FAX NUMBER ( ) | EMAIL ADDRESS

9. I certify that I have direct knowledge of the work covering the time period outlined above. I certify under penalty of perjury, under the laws of the State of California, that the information stated above is true and correct.

Date | Signature | Printed Name

Note: For information on the collection of personal information, please refer to the General Information and Instructions at the beginning of this application package, under the heading "Collection of Personal Information."

FOR CSLB USE ONLY

ADDL-CERT

13A-11 (rev. 08/2023) **Certification of Work Experience**

SAMPLE
See www.cslb.ca.gov

Figure 1-8
Work experience certification form

listing for a contractor's license board, call your state department of consumer affairs. If there's a license requirement, get a copy of the license law and ask for an application. Figures 1-9A through 1-9C include pages from a typical application form. I suggest looking it over so you have a feel for the types of questions and requirements you'll encounter. If you live in California, you can go to the state licensing board's website for more information. The address is www.cslb.ca.gov

Your contractor's license doesn't give you any special privileges except the right to bid jobs and get paid the contract price for the work you've done. In fact, it creates special duties owed to your employees, your customers and the license board. As a licensed contractor, if you do the wrong thing, you can be fined or lose your license.

You'll also be subject to regulation by the labor board, federal, state and local taxing agencies, and OSHA (Occupational Safety and Health Administration). They all have rules you must know and follow.

Fines and penalties for misconduct as a contractor can cost you dearly. We'll cover some of the contractor regulations on sales and safety in later chapters. Following are only some of the limitations that go along with being a licensed contractor.

You're subject to disciplinary action or criminal prosecution if you:

- lie or misrepresent material facts on your application for a contractor's license.
- help an unlicensed person evade the provisions of contractor's law. This includes things like falsely verifying experience so that another person can get a contractor's license.
- lend or sell your contractor's license to another person.
- deliberately withhold pay from employees, subcontractors, and suppliers for their services.
- start work on a job without first getting the required building permits. Your contractor's license may be suspended or revoked for doing so.
- contract for construction work that isn't covered by the valid license classification you hold. The exception is when the prime contract requires the contractor to do closely-related work. For example, you're permitted to paint a fence after you install it. But you can't add a wing to the customer's house that attaches to a fence.
- deliberately write checks for materials or services supplied by others without enough money in the bank to cover the checks.

FOR CSLB USE ONLY

CONTRACTORS STATE LICENSE BOARD STATE OF CALIFORNIA
9821 Business Park Drive, Sacramento, CA 95827
Mailing Address: P.O. Box 26000, Sacramento, CA 95826
800-321-CSLB (2752) | *www.cslb.ca.gov* | *CheckTheLicenseFirst.com*

Application for Original Contractor License

Application Fees

- **Single classification $450**
- Initial license fee (sole owner) * $200
- Initial license fee (non-sole owner) * $350
- **Total fees required (sole owner) $650**
- **Total fees required (non-sole owner) $800**
- Initial license fee to be paid after exams

* **Military Veterans see question #18**

The application fee for a single classification ($450) is not refundable once the application has been filed.

Attach a money order or a personal, business, certified, or cashier's check made payable to the Registrar of Contractors. Do not send cash.

There is a $25 service charge for each dishonored check.

❑ **Voluntary contribution to Construction Management Education Account** ..... **$_____**

Please type or print neatly and legibly in black or dark blue ink.

SECTION 1 –BUSINESS NAME AND ADDRESS

Business Name: The legal business name will appear on the license and is the actual name under which the contracting business will operate. The full business name must be provided. The business name must not be misleading in relation to the classification(s) issued for that license and must be compatible with the type of business entity licensed. Please refer to the General Information and Instructions for information on business name styles.

1. FULL NEW BUSINESS NAME	2. CLASSIFICATION REQUESTED *(Only one classification may be requested on the original application if an exam is required.)*

3a. BUSINESS MAILING ADDRESS Number/Street or P.O. Box	City	State	ZIP Code

3b. BUSINESS STREET ADDRESS Number/Street Only – **NO** P.O. Boxes or PMBs	City	State	ZIP Code

3c. BUSINESS PHONE NUMBER	BUSINESS FAX NUMBER	BUSINESS EMAIL ADDRESS
( )	( )	

SECTION 2 – BUSINESS ENTITY

Corporations must provide a current and active California Secretary of State corporate registration number below. Please be sure to write the corporate titles (president, secretary, and treasurer) in the space provided for the appropriate personnel in Sections 3 and 4. **Partnerships** must list their federal employer identification number (FEIN) below (personal Social Security numbers and individual taxpayer identification numbers [ITIN] are **not** acceptable). **Limited liability companies** (LLC) must provide a current and active California Secretary of State registration number below. If this LLC has officers, please be sure to write the titles (president, secretary, and treasurer) in the space provided for the appropriate personnel in Sections 3 and 4. (*See the General Information and Instructions for more information.*)

4. NEW BUSINESS WILL OPERATE AS A (**check only one**)

❑ Sole Ownership (not a corporation or LLC) ❑ Partnership – Federal Employer ID # _____

❑ California Corporation # _____ ❑ Limited Liability Company # _____

SECTION 3 – QUALIFYING INDIVIDUAL FULL LEGAL NAME AND ADDRESS

Qualifying Individual (Qualifier): A qualifying individual is required for every classification on every license issued by CSLB. You must provide **full legal names** of all individuals. (*See the General Information and Instructions for more information on completing this section.*)

5a. QUALIFIER'S FULL LEGAL NAME Last	First	Middle	DATE OF BIRTH	SOCIAL SECURITY NUMBER or ITIN

5b. RESIDENCE ADDRESS Number/Street Only – **NO** P.O. Boxes or PMBs	City	State	ZIP Code

6. QUALIFIER'S EXISTING / PREVIOUS CSLB LICENSE NUMBER(S) (If none, enter "N/A")	PERCENTAGE OF NEW BUSINESS OWNED BY THE QUALIFIER	DRIVER LICENSE NUMBER	RESIDENCE PHONE NUMBER
	_____%		( )

7. TITLE OR POSITION (**check only one**) For LLC and corporations qualified by a Responsible Managing Officer, the corporate title you provide in this section must exactly match the corporate title listed on SOS records.

❑ Owner (sole ownership only) ❑ Qualifying Partner ❑ Responsible Managing Employee (RME)* ❑ Responsible Managing Member

❑ Responsible Managing Manager ❑ Responsible Managing Officer (RMO) – Title(s): _____

* *RMEs are prohibited from having an active sole owner license. Please visit CSLB's website for an Application to Inactivate Contractor's License, if needed.*

8. I certify under penalty of perjury under the laws of the State of California that all statements, answers, and representations made in this application, including all supplementary statements attached hereto, are true and correct, and that I have reviewed the entire contents of this application. In signing and submitting this application, I also authorize the Franchise Tax Board to provide CSLB with required tax information pursuant to Business and Professions Code (BPC) section 7145.5.

Date	Signature	Printed Name

FOR CSLB USE ONLY

APP - EXAM

13A-1 (rev 12/2023)

Application – Page 1 of 4

SAMPLE
See www.cslb.ca.gov

Figure 1-9A
Contractor's license application form

Applicant's Business Name (as listed in Section 1 of this application): _____

(If additional space is needed, please make a copy of this blank page.)

SECTION 4 – PERSONNEL FULL LEGAL NAMES AND ADDRESSES (Other than Qualifying Individual)

The following must be **completed by all individuals and companies that will be listed on the license**. You must provide **full legal names** of all individuals. Each individual must sign the certification statement under penalty of perjury. *(See the General Information and Instructions regarding company personnel.)*

9a. PERSONNEL FULL LEGAL NAME Last First Middle | DATE OF BIRTH | SOCIAL SECURITY NUMBER or ITIN

RESIDENCE ADDRESS Number/Street Only – **NO** P.O. Boxes or PMBs | City | State | ZIP Code | DRIVER LICENSE #

TITLE OR POSITION **(check only one)** ❑ Owner ❑ General Partner ❑ Limited Partner ❑ Director ❑ Member ❑ Manager ❑ Officer - Title(s) _____ | RESIDENCE PHONE NUMBER ( )

I certify under penalty of perjury under the laws of the State of California that all statements, answers, and representations made in this application, including all supplementary statements attached hereto, are true and correct, and that I have reviewed the entire contents of this application. In signing and submitting this application, I also authorize the Franchise Tax Board to provide CSLB with required tax information pursuant to BPC section 7145.5.

Date | Signature | Printed Name

9b. PERSONNEL FULL LEGAL NAME Last First Middle | DATE OF BIRTH | SOCIAL SECURITY NUMBER or ITIN

RESIDENCE ADDRESS Number/Street Only – **NO** P.O. Boxes or PMBs | City | State | ZIP Code | DRIVER LICENSE #

TITLE OR POSITION **(check only one)** ❑ General Partner ❑ Limited Partner ❑ Director ❑ Member ❑ Manager ❑ Officer - Title(s) _____ | RESIDENCE PHONE NUMBER ( )

I certify under penalty of perjury under the laws of the State of California that all statements, answers, and representations made in this application, including all supplementary statements attached hereto, are true and correct, and that I have reviewed the entire contents of this application. In signing and submitting this application, I also authorize the Franchise Tax Board to provide CSLB with required tax information pursuant to BPC section 7145.5.

Date | Signature | Printed Name

9c. PERSONNEL FULL LEGAL NAME Last First Middle | DATE OF BIRTH | SOCIAL SECURITY NUMBER or ITIN

RESIDENCE ADDRESS Number/Street Only – **NO** P.O. Boxes or PMBs | City | State | ZIP Code | DRIVER LICENSE #

TITLE OR POSITION **(check only one)** ❑ General Partner ❑ Limited Partner ❑ Director ❑ Member ❑ Manager ❑ Officer - Title(s) _____ | RESIDENCE PHONE NUMBER ( )

I certify under penalty of perjury under the laws of the State of California that all statements, answers, and representations made in this application, including all supplementary statements attached hereto, are true and correct, and that I have reviewed the entire contents of this application. In signing and submitting this application, I also authorize the Franchise Tax Board to provide CSLB with required tax information pursuant to BPC section 7145.5.

Date | Signature | Printed Name

9d. PERSONNEL FULL LEGAL NAME Last First Middle | DATE OF BIRTH | SOCIAL SECURITY NUMBER or ITIN

RESIDENCE ADDRESS Number/Street Only – **NO** P.O. Boxes or PMBs | City | State | ZIP Code | DRIVER LICENSE #

TITLE OR POSITION **(check only one)** ❑ General Partner ❑ Limited Partner ❑ Director ❑ Member ❑ Manager ❑ Officer - Title(s) _____ | RESIDENCE PHONE NUMBER ( )

I certify under penalty of perjury under the laws of the State of California that all statements, answers, and representations made in this application, including all supplementary statements attached hereto, are true and correct, and that I have reviewed the entire contents of this application. In signing and submitting this application, I also authorize the Franchise Tax Board to provide CSLB with required tax information pursuant to BPC section 7145.5.

Date | Signature | Printed Name

FOR CSLB USE ONLY

13A-1d (rev 12/2023)

Application – Page 2 of 4

SAMPLE
See www.cslb.ca.gov

Figure 1-9B
Contractor's license application form

Applicant's Business Name (as listed in Section 1 of this application): _____

SECTION 5 – REQUIRED APPLICATION QUESTIONS

All questions in this section must be answered. Questions 10 - 12 pertain to **all** individuals listed on this application (qualifying individual and **all** personnel listed in Section 4), and Questions 13 – 15 pertain to the qualifying individual only.

10. To the best of your knowledge, is anyone listed on this application (or any company the person is or was a part of) named in or responsible for any unsatisfied final judgments, liens, and/or claims against any bond or cash deposit pertaining to a construction project?

If you checked "Yes" for this question, you are required to attach a statement identifying all judgments (pending or on record), liens, past due unpaid bills, claims, or suits and a detailed explanation of the situation. Include the names and addresses of the parties involved. If the obligation was or is being discharged in bankruptcy, attach a copy of the bankruptcy filing and a copy of the creditors list.

❑ Yes ❑ No

11. To the best of your knowledge, has anyone on this application (or any company the person is or was a part of, or any immediate family member of the applicant) ever received a citation from CSLB or had a contractor license or other professional or vocational license or registration denied, suspended, revoked, or otherwise disciplined by this state or elsewhere (i.e., other U.S. state, U.S. territory, agency of the federal government, or other country)?

For the purposes of responding to this question, "disciplined" is an administrative action that resulted in a restriction or penalty being placed on any license you have or have possessed, such as a revocation, suspension, probation, or reprimand.

(Check "No" if the license or registration was suspended due to lack of a bond, workers' compensation or other required insurance, a qualifier, or family support.)

If you checked "Yes" for this question, you are required to attach a statement detailing the events leading to this action.

❑ Yes ❑ No

12. To the best of your knowledge, has anyone on this application failed to resolve any outstanding final liabilities, which include taxes, additions to tax, penalties, interest, and any fees that may be assessed by CSLB, the Department of Industrial Relations, the Employment Development Department, the Franchise Tax Board, or the State Board of Equalization (BOE)?

If you checked "Yes" for this question, you are required to attach a statement regarding the outstanding liabilities. In relation to BOE liabilities, you must indicate if you have entered into an installment payment agreement for that liability with the BOE and provide verification that you are in compliance with the terms of that agreement, if applicable.

❑ Yes ❑ No

13. ***(This question must be answered by the qualifying individual.)*** Direct supervision and control over construction operations includes any one or a combination of the following activities: supervising construction, managing construction activities by making technical and administrative decisions, checking jobs for proper workmanship, or direct supervision on construction job sites. **Will you, as the qualifying individual, perform one or more of these duties?**

❑ Yes ❑ No

14. (***This question must be answered only if the qualifying individual is a responsible managing employee [RME].)*** Business and Professions Code Section 7068 (c) states in part that a RME is a bona fide employee that is permanently employed by the applicant and is actively engaged in the operation of the business, meaning working at least 32 hours per week or 80% of the total hours per week that the applicant's business is in operation. **Will you, as the responsible managing employee, meet the requirements of Business and Professions Code Section 7068 (c)?**

❑ Yes ❑ No

15. The examinations are administered in English. Will you require the use of a CSLB-approved translator?

If yes, in what language will your translator read the exam? _____

❑ Yes ❑ No

SAMPLE
See www.cslb.ca.gov

Figure 1-9C
Contractor's license application form

Applicant's Business Name (as listed in Section 1 of this application): _____

(If additional space is needed, please make a copy of this blank page.)

SECTION 6 *– QUALIFIER EDUCATION, APPRENTICESHIP, LICENSURE, AND MILITARY*

Applicants must answer the following questions and may be granted credit toward licensure requirements or receive expedited processing as noted below. Please refer to the General Information and Instructions for more information. If you checked "Yes" in response to any question, please provide the requested documentation.

16. Have you completed an educational or apprenticeship program?

If you checked "Yes" for this question, you may be granted credit for **completed training in an accredited school** if you:

- Submit transcripts for a four-year degree, two-year degree (or less), technical training (must include course hours and descriptions), and all other degrees in a business or construction-related field.

Transcripts must be certified official and received directly from the educational institution in a sealed envelope. (If you received your degree outside the United States, your transcripts must be translated, if in a language other than English, and evaluated by an accredited evaluation service that does business within the United States.)

❑ Yes ❑ No

You may be granted credit for a **completed apprenticeship program** if you:

- Submit a copy of your apprenticeship certificate; **AND**
- Enter the beginning and ending dates of your completed apprenticeship program:

From_____ to _____

Month/Day/Year Month/Day/Year

(The apprenticeship period cannot overlap the journeyman-level experience period being certified on the Certification of Work Experience.)

17. Are you licensed in another state in the same classification for which you are seeking licensure? If you checked "Yes" for this question, you must provide a License Verification Request form that is completed by the licensing agency from the other state, please see CSLB's website to see if your state and classification qualifies.

❑ Yes ❑ No

18. Are you serving in, or have you previously served in, the United States Armed Forces?

If you checked "Yes" for this question, please provide the following documentation for review to potentially receive expedited processing and a 50% reduction in the initial license fee:

- Evidence of your current military duty (copy of your military orders) or your previous military service (copy of your latest DD 214 long form – Certificate of Release or Discharge from Active Duty showing discharge status or Copy of Driver's License with "Veteran" endorsement) or National Guard discharge (form GNB 22) or Reserves discharge (form DD 256). See instructions section under **Military**.

❑ Yes ❑ No

19. The CSLB will expedite the licensure process and waive the license application fee and the initial license fee charged by the board for an applicant who is the spouse of an active-duty member of the Armed Forces stationed in California and meets both of the following requirements:

Are you married to, or in a domestic partnership or other legal union with, an active-duty member of the Armed Forces of the United States who is assigned to a duty station in California under official active-duty military orders?

AND

Do you hold a current license in another state, district, or territory of the United States in the profession or vocation for which you seek a license from the board?

❑ Yes ❑ No

If you checked "Yes" for this question, please provide documentation of current licensure AND marriage, partnership or legal union AND active-duty military orders as described in the instructions under **Military**.

No fees will be required if you submit all the above-mentioned documents with the application.

20. Were you admitted to the United States of America under one of the circumstances described below?

1. Admitted as a refugee pursuant to section 1157 of title 8 of the United States Code; 2. Granted asylum by the Secretary of Homeland Security or the United States Attorney General pursuant to section 1158 of title 8 of the United States Code; 3. You have a special immigrant visa and were granted a status pursuant to section 1244 of Public Law 110-181, Public Law 109-163, or section 602(b) of title VI of division F of Public Law 111-8, relating to Iraqi and Afghan translators/interpreters or those who worked for or on behalf of the United States government.

If you checked "Yes" for this question, please provide documentation as described in the instructions.

❑ Yes ❑ No

STATE TAX AND OTHER OBLIGATIONS NOTICE

The State Board of Equalization and Franchise Tax Board may share taxpayer information with CSLB. You are obligated to pay your state tax obligation. CSLB may suspend or refuse to issue, reactivate, reinstate, or renew a license if your state tax obligation, child support obligation, or any outstanding final liability to CSLB, the Department of Industrial Relations, or the Employment Development Department is not paid. (BPC sections 30, 31, and 7145.5)

13A-1 (rev 12/2023) **Application – Page 4 of 4**

SAMPLE
See www.cslb.ca.gov

Figure 1-9D
Contractor's license application form

- enter into a contract with an unlicensed non-employee, to construct a project.
- default on a construction contract. If you fail to complete a contract, and you don't have a valid excuse, you may be fined and jailed.
- use funds collected specifically for completion of one job on another job. This is called *diversion of funds*.
- disregard and violate the laws and provisions of any official authority, such as building codes, state and local codes, labor laws, safety laws, and water codes. This also includes tax and insurance laws.
- join with another licensed contractor to submit a joint bid or contract on a job, without first getting a *joint contractor's license.*
- fail to list your correct contractor's license number on contracts, bids, legally required forms, and advertising. This includes the sign on the side of your truck.
- advertise as a contractor unless you hold a valid license for the applicable classification.
- refuse to surrender your license to the contractor's license board when requested to do so.
- operate as a contractor with an expired or forged contractor's license.
- use or display a contractor's license that is not issued to you.
- violate state safety provisions.
- remove, deface, or destroy safety signs or notices required by state agencies.
- falsely state the purpose of a loan when you apply for one. You can't apply to a bank for a loan to build a retaining wall on your property and then use the money for a new car. That's embezzlement.

Those are just a few of the rules for starters. If you have, or will be hiring, employees, there are more — lots more.

Laws Governing Employers

If you're an owner building on your own property, you don't need a contractor's license, providing you don't offer the property for sale for at least one year after you finish building. If you hire someone to help you build your project, you need workers' compensation insurance; see your insurance agent.

Heavy penalties are usually imposed on employers who fail to buy the necessary coverage — a 10 percent penalty and all medical expenses if a person gets hurt while working for you. This applies to relatives as well as non-relatives.

Generally, buying workers' compensation insurance relieves you of liability for job-related injuries. The injured employee's only claim is for workers' compensation unless you're guilty of negligence that caused the injury.

As an employer, you have to comply with both state and federal laws that apply to employers. For example, you need a Federal Employer I.D. number and you must file a Form 941, Employer's Federal Quarterly Tax Return (and remit both the employer's and employees' withheld taxes) each quarter. Both your state government and the federal government have effective ways to enforce these laws.

"Generally, buying workers' compensation insurance relieves you of liability for job-related injuries. "

Like all construction contracting, fence contracting isn't the easiest job in the world. There's not much paperwork if you're a one-man company. But most fence contractors need help with carrying materials, mixing concrete, laying out paths and many other tasks. Unless you're Superman, you'll probably hire some help. Once you do, you're an employer and have to meet the requirements placed on all employers. Below are some of the things all employers need to know.

Most states have labor laws along the following lines:

- If you pay an employee with a check and that check bounces, you're subject to a civil penalty. If you lay off an employee and the final paycheck bounces, you're liable for up to 30 days' additional pay, or pay up until you make the check good, whichever comes first.
- In most states, if you fire an employee for cause, you'll need to provide their final pay at the time of firing. Failure to do so may result in additional penalties and fees.
- You may not *require* your employees to work more than 40 hours per week. You can ask them to, but they don't have to. If you discipline them for not working over 40 hours, you're subject to a fine and a possible jail sentence. But note this carefully: The 40 hours need not be in a five day week. You can ask employees to work six out of every seven days. If you ask employees to work seven days or more in a row, you have to notify your employees in advance and give rest days equal to one for each seven days in the month.

- You can't include requirements in help wanted ads that would discriminate against an applicant. Federal law prohibits discrimination based on race, color, age, sex, national origin or religion. Of course, you may discriminate on the basis of qualification. You can also reject a candidate who can't do a job because of physical or mental limitations.
- You have to pay equal wages for equal work, providing there is equal skill, responsibility, and effort involved. You can't hire a man for $20.00 an hour to nail boards on a fence and then hire a woman for $10.00 an hour to do the same thing.
- Private sector employers can't ask an applicant about their past criminal or arrest record or require an applicant to take a polygraph (lie detector) test.
- You can't demand that an applicant or employee purchase items from you. You can require the person to purchase items required for the job, but not from you. For example, you can require safety shoes. You should tell applicants this before you hire them.
- You can't hire an illegal alien. To knowingly hire an illegal alien to the detriment of legal residents is punishable by a fine. Examine the applicant's *green card.* This is a work permit granted by the INS (Immigration & Naturalization Service). You should also check for a passport. The green card identification number should be listed in the passport and should match the number on the card.
- You must provide employees with safe working conditions. Explain any job hazards and safety procedures to new employees before they start work.
- You can't fire or take other disciplinary action against an employee who complains to the authorities of a health or safety violation. If you fire an employee for refusing to work in an unsafe environment, you will have to reinstate them with full back pay. If you demote them, you will have to return them to the status they held before the demotion and make up the difference in pay and benefits.
- If an employee is injured due to unsafe working conditions, the employer must report the injury to the Department of Labor Statistics, OSHA, and their insurance company. In most states, if an employee is killed on the job because of unsafe working conditions, the employer can be fined and jailed.
- If a fellow employee causes another employee to be injured, the injured employee or their surviving family may seek damages from the employer. You're expected to monitor your employees and make sure they're all working safely.

- You can't punish an employee for belonging to, or speaking out for, a political party, person, or activity.
- An employer who advertises for replacement help during a labor dispute must include in the advertisement that there is an ongoing labor dispute.
- If your employees go on strike, you may use family or supervisory personnel to replace the striking workers.
- All employers must get a Federal (from the Internal Revenue Service) and a State Employer Identification Number.
- You are required to withhold Federal and State income taxes, Social Security contributions and disability insurance from employee wages. You also have to contribute matching Social Security funds and Federal unemployment tax based on your total payroll.

  Contributions and withholding amounts change from year to year. When you register with your state and local taxing agencies, you'll be notified of current withholding rates, and the method for depositing them.

- You have to pay *nonexempt* employees at least twice during each calendar month. Nonexempt employees are the ones you pay by the hour. Exempt employees are usually management people, and get paid a monthly or yearly salary without regard for the number of hours they work.
- You have to pay employees in legal tender. You can't use merchandise, coupons, scrip, notes, stock, bonds, or other forms of payment. Legal tender means check or cash. You can ask your employees to accept items other than legal tender, but employees have to accept voluntarily. New companies sometimes use notes and stock as compensation during the first few months when they're going into business.
- You must keep a list of all employees on file. The list must include the ages of all minors and the names and addresses of all employees.
- You have to keep payroll records for at least four years from the time you filed the returns that apply to them, or paid the taxes, whichever is later. See IRS Publication #334, Tax Guide for Small Business. You can get it free on the Web at www.irs.gov or from any IRS office.
- You must also keep employment application forms, even from people you didn't hire, for at least a year from the date of the application.

Collecting Sales Tax

For sales tax purposes, contractors are generally considered to be consumers and pay sales tax on their materials. When they sell material to their customer, they don't add sales tax as a separate item on the bill.

In some states, dealers who hold a seller's permit (sometimes called a resale license) don't pay sales tax on their materials. Instead, they collect the tax from retail customers and remit the tax collected to the taxing agency every few months. That's a nuisance. It's easier to pay the tax, consider it a cost of materials, and avoid filing sales tax returns monthly or quarterly.

I hope this discussion hasn't discouraged you. After a while, most of these laws will begin to make sense. Following them almost gets to be automatic. But it's not always cheap or easy.

In the next few chapters, I'll tell you all about the mechanics of building all kinds of fences and walls. Later in the book, I'll explain how to get your fence and retaining wall contracting business started on the right foot and how to keep it running successfully.

Chapter 2

Layout & Design

BEFORE YOU START TO build, you need a good plan. Take a walk around town with your camera and a notepad. Try to imagine why the fences were designed the way they were. Study construction techniques, look for problems, and judge how well the walls and fences have withstood the test of time. You can learn a lot about fence design simply by noticing others' mistakes.

Take photos to use later as examples for your customers. Compile a fence and wall catalog. This "walk and shoot" routine will also give you a good idea of what your competition is doing. And as a bonus, you can use your photographs as a selling tool. If you're selling a fence like the one in Figure 2-1, show your customer that photo, and say, "I can prevent post rail splitting, Mr. Jones, by putting a metal strap around the top of each post I install. That solves the problem and makes for a long-lasting fence."

Figure 2-1
Post and rail fence with splitting posts

Start Planning by Asking Questions

Layout and design is one part of fence and wall building that I especially enjoy. Before you can begin, you have to ask some questions.

- What's the purpose of the fence? Is it for security, privacy, to prevent passage of children, pets, or livestock — or is it just an attractive addition to the yard? Should it provide a barrier, windbreak, sound insulation, or light shield?
- What type of fence would your customer prefer? Wood, metal, or masonry?
- If it's to be a wood fence, what type of wood would he prefer? Redwood, cedar, cypress, hemlock, spruce, fir or pine? What style of wood fence would he prefer? 1 x 4 board, 1 x 6 board, picket, post and rail, split rail or board on board?
- If it's to be a metal fence, what type of fence does he want? Chain link, ornamental metal, woven wire, ornamental wire, or welded pipe?
- If it's to be a masonry fence, will it be CMU, brick, or a combination of both?
- What is your customer's budget?
- How long does he want the fence or wall to last?
- Does the design have to blend with an existing building or fence?
- Will you do all the work yourself, or subcontract part of it?

A fence or wall is a major investment that your customer will live with for many years. Be sure it turns out the way he intended. You don't want to do a top-notch building job only to find out you misunderstood your customer's intent. It might be what he *wanted*, but not what he *needed*. You're the expert; it's up to you to ask the right questions and make sure the final product is what the customer wants *and* needs.

More Important Questions

If your customer makes a mistake, it's still your reputation that's on the line. So take the time to list everything the fence or wall is intended to do. Sometimes it will have to do several things at once, or different things at different points along its path. That brings us to more questions:

1. What *is* the path of this fence or wall? Will it surround the property, divide the property into different areas, or cross only one section of the property? How high should the fence be? Does it have to block the view of late night swim parties? Keep in mind that in some localities, you'll need a permit for any fence higher than 6 feet.
2. Are there several people concerned with the location of this fence? Is a neighbor involved in the design or purchase? Might the fence or wall block someone's view? Are there restrictions by an HOA (Home Owners' Association) that you must take into account?

3. Where will you need access gates? Does the customer want a storage area for trash containers, utility meters, gas tanks, pool supplies and pumps, or firewood? Does he need gate access for a boat or RV? Some places require those to be out of sight from the street and the neighbors. This will also determine the height of the gate required.
4. After the fence or wall is built, what other plans does the customer have for his property: perhaps a grill, firepit, pond, waterfall, or tool shed? You can often incorporate them into your fence or wall design. Just be sure they're located where you want them. Once built, they'll be hard (if not impossible!) to move.
5. Exactly where are the property lines? On new properties, you can often find the metal surveying stakes at the corners of the property. In older developments, or where there's abundant landscaping, these might be gone, or buried. To play it safe, order a new survey.

   You can order the survey and include it in the contract with your customer, or the customer can order the survey himself. If you put a fence in the neighbor's yard because you didn't check the location of the property line, you could be forced to move the fence at your cost. If you have a survey and it proves to be incorrect, then the surveyor is responsible for any costs involved.
6. If the fence is built on the property line, will you need legal assistance to draw the contract? This is usually a good idea if the construction cost and maintenance responsibilities are shared. Legal counsel also helps solve the problem of who looks at the back side of the fence, when it's a wood fence. If the neighbor has small children, it will be best to place the back side of the fence on the opposite side from the neighbor's property, since children have a tendency to climb fences using the rails as steps.
7. Do your local building codes impose rules or restrictions on height or materials? Will your design require consultation or approval by a civil or structural engineer? Will you need a building permit? What restrictions does the utility company have about access to their meter?
8. How soon does the client want the fence completed? Keep in mind that some materials might have to be special ordered or custom fabricated, which can affect the entire schedule.
9. If the fence or wall restrains a dog, how big is the dog and what's its disposition? The customer will get complaints from neighbors and the local authorities if the fence is too low and the dog shows aggression toward passersby.

The answers to these questions are a vital component of good fence or wall design. And this is just the beginning — there's a lot more.

The Finer Points of Design

When you've asked all the questions and gathered all the information you need, there's still one more thing to do: Take a hike. Walk the proposed fence line with a clipboard, your drawings, and a red pencil in hand. Note the spots that will give you trouble:

- Mark any obstacles like trees, boulders, a patch of tall weeds, or a stream. Watch out for poison ivy and poison oak. By the way, this stuff is more toxic than you could ever know. See Chapter 14 for more information.

  Clearing the fence line means removing old fences, trees and logs along the new fence line a distance of 5 feet on each side of the new fence, for a total width of 10 feet. Also, note the ground condition along the fence line. Is it clean topsoil, clay, sand or rock?

- Do you have to build up or down a hill?
- Are there power lines, water lines, or other utilities to watch out for?
- Do you have to move sprinklers or take down part of an old wall?
- Will trees be planted along the fence after it's built? Figure 2-2 shows a wood fence pushed out at the base because the palm tree behind the fence was planted too close. Many types of trees have invasive roots that can upset fence posts or the wall foundation. Caution your customers.

Account for any items that will take extra effort, time, or materials. Plan for them before you get started so you won't have any surprises later.

Ask your customer about long-range plans for home improvements. If he plans to build a pool or tennis court or add on to his house in the future, he'll need access for heavy equipment. It's foolish to build a fence that will need to be ripped out later for dozer or backhoe access into the yard.

Figure 2-2
Trees planted too close to a fence can cause damage

Climate

You have to consider the weather when you design a fence or wall. If the ground freezes in winter, you'll need to extend wall foundations below the *frost line*. That's the maximum depth to which frost will penetrate the ground during the coldest winter weather. Your local building department will explain how deep foundations have to be to get below the frost line.

How much rain do you get, and what are the soil conditions? In wet weather, ground that used to be solid can turn boggy. Fence posts and wall foundations have to be well below the mud level, otherwise the fence or wall will be floating on mud until the ground dries.

Consider the prevailing wind direction and the expected top wind speed for the area where you're building. You may have to reinforce sections of the fence where the wind loads will be greatest, or design a fence that lets air flow through it. A fence that slows the wind will cause snow to accumulate on either side of it. Select an open design if snowdrifts may be a problem.

Water

Water is funny stuff. It flows in all directions. It can flow down (due to gravity), or sideways, and even up (through capillary action). And it eventually destroys all it touches. It will be one of the chief destroyers of your work. Try to anticipate what water will do to ruin your fences and walls, and plan around it.

Capillary action sucks water out of the ground into concrete and lumber. To reduce capillary action, keep the bottom of all wood fences 2 to 3 inches above ground level. If this isn't practical, use lumber that's resistant to water damage. I recommend cedar, redwood, treated lumber, or coated lumber. Chapter 7 has suggestions for painting and waterproofing fences and walls.

Warping

Warping is caused by both water and heat. In less time than you would imagine, warping can destroy a fence. Most lumber is sold as S-dry, which contains up to 19 percent water. When this water evaporates, the lumber tends to shrink. This shrinking causes splits and warping. I prefer to use kiln dried (KD) lumber whenever possible.

Wood Rot

Wood rot is a fungus that grows in wet wood and actually consumes it. You can kill this black fungus with an application of bleach or commercial formulas of di-sodium octaborate tetrahydrate or sodium borate that are marketed under a variety of names. If you discover wood rot, the first step is to eliminate the moisture source; but prevention is the best cure for this problem. Here are a few simple things you can do:

- Use treated lumber to help protect against this fungus.
- Leave space between pickets or boards of wood fences, which promotes drying after a rain.
- When setting fence posts, mound the concrete around the posts — this will cause water to drain away from them.

Landscaping

You should always be alert for opportunities to build extra value into your jobs. For example, lawn mowing and plant care are a nuisance at the base of a fence or wall. Plan a *dead area* under or next to the fence or wall. At the base, bury landscape fabric or use rocks, cement, bricks, or block to keep plants and grasses from growing. Plants that climb up or grow around the wall or fence will damage it. They do this two ways:

1. They hold moisture against the fence and prevent thorough drying, promoting rot and fungus.
2. Plants such as ivy can actually consume a fence or wall.

What if your client *wants* plants on his wall or fence? Include planters as part of the design. See Figure 2-3. Build the planters so water doesn't drain onto the fence or wall surface. Furnish a replaceable liner for the plants.

Most plant nurseries sell inexpensive plastic planter tubs. Provide drainage through the liner by installing a drain pipe that empties away from the wall. Use ½-inch PVC cold water pipe and slip-fit PVC fittings for the drain lines.

You can assemble the materials for a planter quickly and easily with *purple primer* and PVC cement. Thoroughly clean and sandpaper the outside of the pipe and the inside of the fitting where they will be joined. Use the primer and let it dry before you apply the cement. Then, as you squeeze the parts together, give them a quarter-turn. This makes for a more secure bond. Be sure of your alignment when you put the parts together, as it sets up very fast.

If you can't arrange drainage for the planter then fill the first few inches of the planter with stone or coarse gravel, and cover that with dirt. That will help keep the plants from being over-watered. Buy the liner before you build the planter so you can size everything correctly. You may even want to build a watering device into the wall, such as a trickle outlet or hose bib.

Access Beyond the Wall or Fence

Does the area outside the wall or fence belong to the owner? Does the owner have to maintain that space? For example, there may be a strip of grass between a wall and the sidewalk, or between the sidewalk and the street. If the owner has to maintain it, include access to water and power for electric motors and trimmers. Figure 2-4 shows an example of a maintenance nightmare due to the lack of trimming and mowing access between fences.

Figure 2-3
Planter built into a fence

Appearance

Consider turning a plain block wall into a thing of beauty by adding decorative block layers or inserting face block. You can stylize a wood fence by mixing pickets of different widths or with distinctive top treatments.

Figure 2-4
Inadequate maintenance access

Figure 2-5
CMU wall with a stucco finish

You can apply dozens of textures to a stucco wall with simple hand tools. See Figure 2-5. Incorporating inlays is another way to give walls a unique look. I've even seen walls with bottle caps, horseshoes, broken colored glass, marbles, old farm and ranch equipment, tools, and driftwood set into the face.

Allow for Equipment

Consider the path and size of the equipment the owner will move through the gates and openings in the fence. This is especially important on ranches and farms, or if a boat or motor home will be stored on the site. Allow for good traffic flow. Keep in mind that many people use rider mowers to cut their lawns. For smaller mowers a 3-foot-wide gate is adequate, but for larger mowers, the gate needs to be at least 4 feet wide. And if an owner later buys some large equipment, like an RV or a boat, and the fence you built doesn't have a gate big enough, whose fault is it? Yours, of course — just ask the owner! My point is this: It's your responsibility to alert the owner to possibilities he may not have considered.

Sunlight and Shadows

The sun comes up in the east, arches overhead and to the south, and sets in the west. In winter, fences can cast very long shadows in the mornings and afternoons. Your choice of height or material might change if your customer wants to control heat entering a south-facing room, or has plans for a garden. But keep in mind — there's a tradeoff between sunlight and privacy.

If solar heating, cooling or shade are important, do some testing. Before you build that permanent fence or wall, buy about a dozen pieces of inexpensive 1 x 2 lumber several inches longer than the proposed height of the project. Get some marking lime, too. Put the stakes in the ground at various locations along the fence line. Pound them in so their tops are at the height you plan for the fence or wall. Use the lime to mark the range of shadows thrown by the stakes. You'll soon see if an ornamental iron or chain link fence would be better next to the garden, or if the wall needs to be higher outside the south bedroom window.

Check the effect on neighboring property, too. If the new wall will block the neighbor's sun deck or garden, he probably won't be happy.

Figure 2-6
A picket fence built on an incline

Design for Drainage and Soil Retention

Will you be digging into a hillside or backfilling against a wall to hold or level an area? If the containment is greater than 2 feet high, you'll usually need a building permit. Containments greater than 4 feet high should be designed by an engineer.

Water that backs up behind a wall can undermine the foundation or build up enough pressure to topple the wall. To keep your wall from becoming a dam, include weep holes or a perforated drain pipe along the base of the wall.

"A flat, level lot poses few problems, while a hilly lot can provide many challenges."

Even a block wall around a level yard can create problems if most of the landscaping is near the wall. This can cause water to back up against the wall, creating puddles, flooding, and causing poor plant growth. Plan drainage holes every few feet at ground level. If this isn't enough, you may have to connect to a sewer line or build a dry well. I'll discuss retaining walls in more detail in Chapter 10.

Slopes and Hills

Terrain is a major consideration in your design. A flat, level lot poses few problems, while a hilly lot can provide many challenges. You can use your elevation drawing here. (We'll talk about doing the drawings later in this chapter.)

There are two basic ways to approach fence building on a slope. The first is to build on the incline, as shown in Figure 2-6. The alternative is to *step* a fence down the slope, with the posts and rails joining at 90-degree angles just like they would on level ground. The result is an increasing gap between the

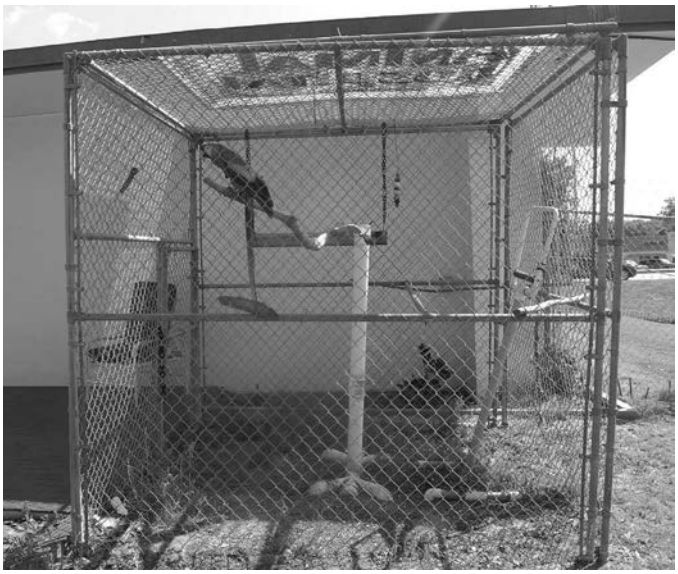

Courtesy of Dr. Bob Greenwald

Figure 2-7
Chain link bird cage

fence and the ground as you travel down the slope. If the fence section lengths are too long for the degree of slope, you'll wind up with large voids under your fence that must be covered. If the fence sections lengths are too short, you'll end up using wasteful amounts of material.

Crossing Water

You have two choices when the fence line crosses a stream or pond. You can end your fence at the water's edge or suspend the fence across. In the latter case, you have to consider water levels, adequate post anchors, and materials floating in the water. Will the fence obstruct boaters? Again, be sure you build a fence, not a dam.

Animal Pens

Design these to *contain* animals, but be careful not to injure them. Barbed wire is fine for cattle, but not recommended for horses: A cow won't try to jump a fence, but a horse will. Barbed wire can injure a horse as severely as it can injure a human.

Many animals, especially dogs, can dig under a fence. You may have to extend a fence 12 to 18 inches below ground level to discourage them. Bird enclosures, like the chain link style in Figure 2-7, need a mesh top and proper inside supports.

Figure 2-8
Wall with built-in lighting system

Artificial Light

Earlier in the chapter, I talked briefly about the relationship between a fence and sunlight — but not artificial light. Light from a nearby school, industrial area, street light or traffic can be annoying. The right kind of fence can block it. Check the fence or wall site at night. Plot the nuisance light sources and plan your fence or wall accordingly.

On the other hand, your customer may *want* light. You may be asked to build security or decorative lighting into a fence or wall. See Figure 2-8. In this case, you need

to check the local electrical code and draw up a wiring diagram. Make this as detailed as possible. Describe the fixtures, their wattage and cost, the routing of the wiring and conduit, the circuit breaker or fusing system and a timer, if one is required. Chapter 9 has more information about electrical installations.

If the fence or wall you're building will receive direct sunlight during the day, you may want to offer a solar lighting option to your customer. Solar collection and light emitting diode (LED) technology has improved to the point where it can be a practical alternative to traditional wired lighting systems.

Figure 2-9
Security system

Security Systems and Safety

Your customer may require a security system like the one shown in Figure 2-9. If cameras or other sensors are involved, you have to take into account their location, type and protection from thieves and vandals. You also have to consider how to minimize false triggering. Describe in detail all the wiring and protection circuits.

There are do-it-yourself security kits available that you can install, but for maximum security, you or your customer should subcontract with a security expert. In any case, you'll probably have to build the wiring into the fence or wall. If you're not trained or licensed to do this, hire an electrician to do it for you.

Safety Barriers

Some buildings need protection from vehicular traffic. Homes located on curves, hills, and at the end of a T-intersection are common examples. If you're building a wall or barrier in such a place, it should be strong enough to absorb impact from a vehicle. You want to stop it in the front yard, not the bedroom. High visibility built-in reflectors are a must. Put reflectors on posts on either side of driveway entrances too.

Turning Room, Accessibility and Visibility

Allow enough space for vehicles to maneuver through gates and driveways. Many garages and driveways are arranged in an L-shape. It's hard to back a car out of a garage and around a wall or fence. Don't allow yourself to become the dummy who built a fence so the car couldn't get out of the garage. Lay out the

proposed fence path on the ground, and then test your design by actually driving around it; check for clearance and visibility. And be sure driveways are wide enough so people can get in and out of their vehicles easily.

In some places, you may need to put a separate post *(bollard)* or bumper in front of a wall to keep people from hitting it. Make the post or bumper tall enough so drivers can see it through their rear view mirror.

A bollard is a 4- or 6-inch steel pipe filled with concrete and set at least 3 feet deep in concrete.

Public Domain Access

According to common law, someone who passes over the land of another (without objection from the owner) for many years may have a *prescriptive easement*. That may give them the right to continue passing over the land. In fact, your fence may be intended to prevent anyone from getting a prescriptive easement over the owner's land. In that case, you could wind up having to remove the fence, or add a gate. If your customer plans to build a wall or fence over a path that people were formerly free to use, suggest they talk to a lawyer first. It's true that it's not really your problem as a fence contractor, but your professional reputation is at stake if you don't look out for your customer's best interests.

Planning Ahead

Children and puppies like to climb; fences and walls are favorite places to do it. I lost the bottom rail of one fence several times. The rail was butted to the post and toe-nailed in place. Kids stood on the bottom rail to see over the fence. Sooner or later the nails would let go, and down would come the rail and the kid. I finally solved the problem with proper blocking under the rail.

What I'm getting at is that people, including adults, will do things you don't expect — or want them to do. Take this into consideration and make your design as structurally sound as possible. And here's another consideration: Wood fences have splinters. If you're building a fence that kids are sure to climb on, suggest a block wall instead.

Many fences are subject to intentional abuse. Have you ever seen a chain link fence at a movie theater or a high school that didn't show signs of deliberate damage? If you're building a fence that will probably be vandalized, suggest materials that will resist malicious mischief.

Design for Economy

Design any fence or wall for function, looks, and structural integrity — in addition to cost. A cheap fence will probably cost more in the long run. If the customer is on a budget, build the fence or wall in sections. Help them get financing, if necessary. Design for the lowest possible cost, but not at the expense of quality or function.

Job Start Checklist

Part of designing a fence or wall is planning the job from start to finish. When you understand exactly what the fence or wall is supposed to do, you can begin the design. Here are the steps to follow to make sure your project flows smoothly from the design stage to final cleanup.

1. Make a list of all things you want the fence or wall to be or do.
2. Make sure you're not infringing on the rights of others, or creating a nuisance for your customer (or yourself).
3. Check on all rules and restrictions.
4. Pay attention to the legal issues. Get the proper permits. Settle any questions about ownership or property lines.
5. Draw a plan and elevation view of your project. I'll tell you how a little later.
6. Make up a detailed materials list. Allow for defects and waste. Order materials in advance of the job start date.
7. Schedule material deliveries for the day before you plan to begin work.
8. Have a plan for protecting uninstalled materials from theft and bad weather after each work day.
9. Review everything before you finalize the plans and spend any money.

Drawing the Plans

When you've decided what kind of fence or wall to build and where to build it, it's time to start drawing the plans. Don't skip this step of the process. Your building department may require them before they issue your permit. And you can prevent expensive mistakes by making detailed drawings before you build. You may need any or all of these drawings, depending on the job:

- sketch
- preliminary drawing

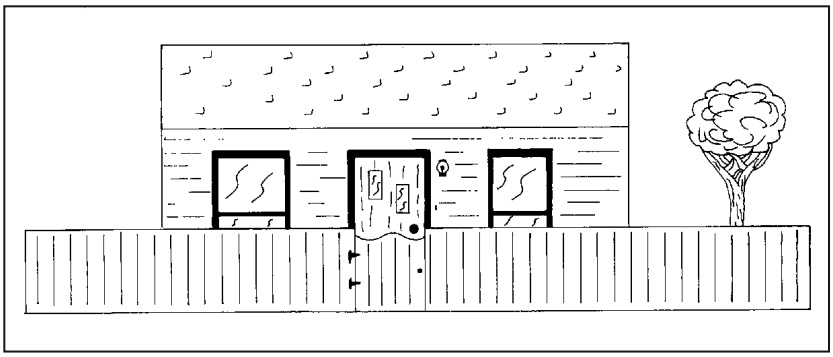

Figure 2-10
Elevation view

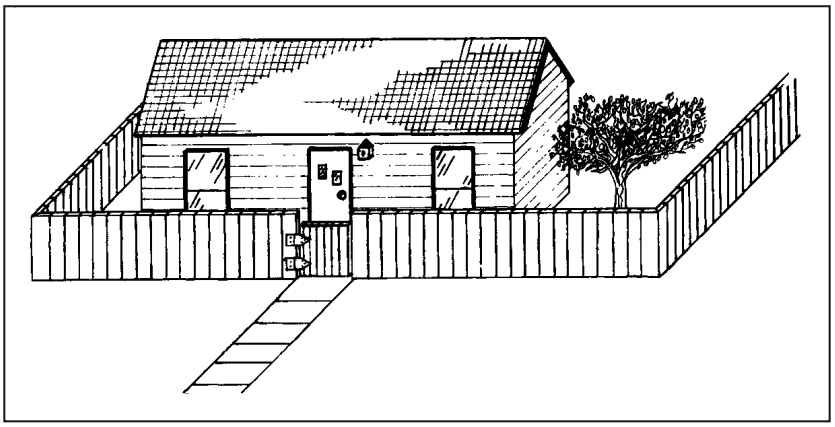

Figure 2-11
A perspective view

- plan view
- elevation view
- detail view
- artist's conception

A *sketch* is the first rough draft of your ideas about what the final design will look like. The *preliminary drawing* is the cleaned-up version of your sketch. You can present this to your customer to get design approval.

The fence *plan view* is like a floor plan — a bird's-eye-view from above. Draw it to scale, usually ⅛ inch equaling 1 foot. Mark compass directions on the plan view. You'll need them when you consider where light and shadows will fall.

You'll also need an *elevation view* that shows what the wall or fence will look like when viewed from eye level. Include buildings, plants and trees in your elevation drawing. Figure 2-10 is an example. Notice how the elevation drawing only shows the surface that faces you.

You might be able to get construction drawings for the property from either the builder or the city planning department. Those will include both plan and elevation views. You can have several copies made from the original blueprints, and use them as your worksheets.

Detail drawings are like close-ups. They show how components will go together. You'd use a detail drawing to show how to anchor a wood fence post. Because detail drawings are so important, there's a separate section on these later in this chapter.

The *artist's conception* is an elevation and perspective view of the final design, usually done with colored chalk or pencils. Perspective drawings show a fence or wall as though you were looking at it from above and at an angle. Figure 2-11 is a perspective view. I'd use a drawing like this to help make the sale. It helps the owner understand exactly what you intend to build.

If You Can't Draw...

How well can you draw? Nearly anyone who can draw a straight line can create an elevation view and plan view of a fence or wall. A perspective drawing is a little harder, of course. But if drawing scares you off, here are a few suggestions:

- Use a drafting service or hire a freelance drafter. Most communities have freelance artists and draftsmen. Search the Web or look in the Yellow Pages under "drafting" or "artists, commercial."
- Use *peel and stick* layouts, *rub-offs*, or templates. You can get these from stationery stores, art suppliers and book stores. Draftsmen use them to draw plans and to apply texture designs to their plans. You can buy designs that represent brick, wood, rock, and so on.
- Improvise: You don't have to be a professional artist to draw a fence plan. Get a few #2 and #4 pencils and some grid paper. Do your best at sketching out your plan and elevation layout. You might be surprised at how well you can draw — or what a building inspector will accept.

Tracing is another method you might want to try. Use illustrations from this book, if necessary. Copy photos or drawings and paste them to your layout. When you're done, photocopy the whole layout, and you're in business.

You'll need copies of your drawing for your customer and your crew. The building or planning department at city hall will probably need at least three copies. You might also have to submit one or more copies to any HOA concerned with your project.

How to Do the Drawing Yourself

If you're talented enough — or brave enough — to do the drawings yourself, here's how to begin: Start drawing from the inside out. Let's say you're drawing a block wall with facing brick on the outside. First, outline the blocks lightly, and then darken the lines when they're satisfactory. These steps are represented by Steps A and B of Figure 2-12. Next, show the brick ties and the brick itself — Steps C and D. Then add the dimension lines and begin the notes. Finally, enter the dimensions and fill in textures and descriptions, as shown in Steps E and F.

You should *profile* your drawings. That means emphasizing the main objects with heavier lines to make them stand out. You can shade the drawing on the back side of the vellum with a medium blue pencil so the shaded areas stand out. Don't use wax crayons or black or red pencils for the shading. Those block the copier process so the copy will come out black in the shaded areas.

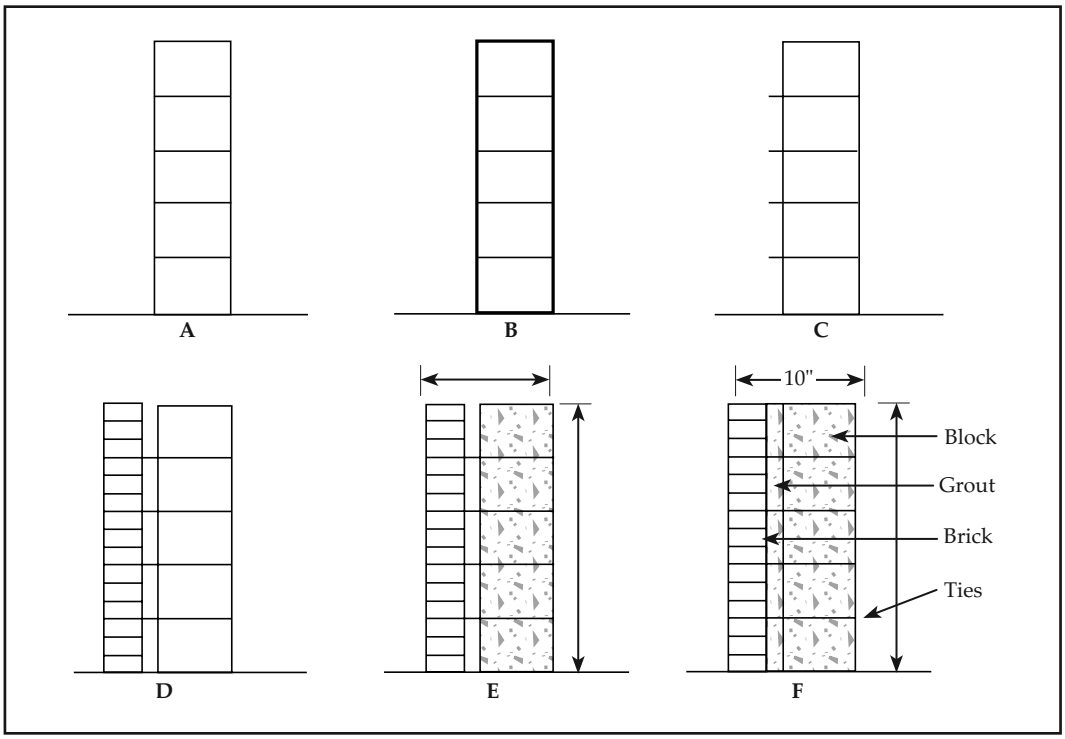

Figure 2-12
Six steps to a completed drawing

Pointers (the lines you draw between notes or bubbles and the object they relate to) should be straight lines. End each pointer with an arrow at the object, as in Figure 2-12.

Make your notes generic. Don't use brand names unless you intend to use brand name material. For example, a note should read "8 x 8 x 16 standard block", not "Blockworst standard block", unless you mean to use only block from a company named Blockworst.

Call out sizes in whole numbers whenever possible. Avoid fractions if you can. When you can't, use fractions a builder can measure accurately with a standard tape measure. Callouts down to a thirty-second of an inch will drive your workers nuts. Use 1⁄16, 1⁄8, 1⁄4, 1⁄2, etc. Some use the decimal equivalents for fractions of an inch, but I don't like that method. In any case, don't mix fractions and decimals on the same drawing or group of drawings.

It's fine to use nominal sizes in your notes, but your drawing and dimensional information must be exact and drawn to scale. For instance, your note can read, "2 x 4, #1 common, pine," but your scale drawing and dimensions must be 1½" x 3½".

You'll have to run dimension lines across and up the page, but the dimensions should all read from the same direction. Otherwise, the person studying the drawing must keep rotating the drawing in order to read all of

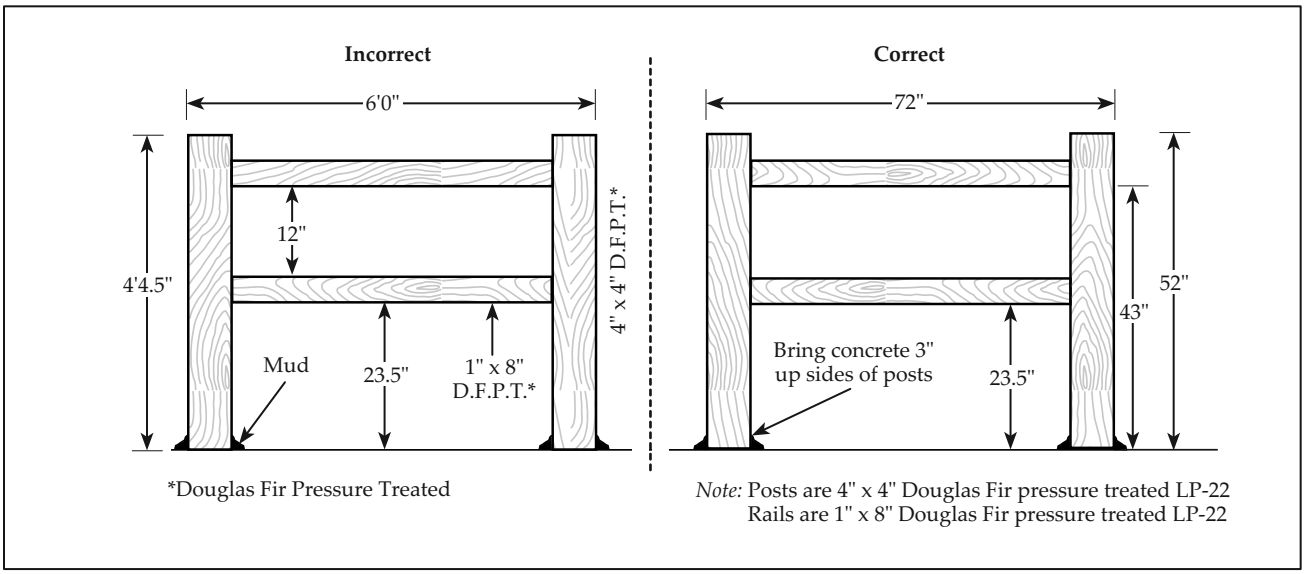

Figure 2-13
Wrong and right way to show dimensions

the dimensions. Try to group your dimensional information together rather than scattering it all over the page. Also, place the smaller dimensions within the overall dimensions. Figure 2-13 shows the right and wrong way to show dimensions and notes.

There are three ways in which to specify dimensions:

1. *Plus-or-minus tolerance:* "84 inches +/– ⅛ inch." This means that anything between 84⅛ and 83⅞ would be acceptable.
2. *Minimum/maximum dimension:* "84 (max)." The item can be less than 84, but not more.
3. *Hold* the dimension. This means no tolerance is allowed.

Don't use abbreviations and slang on your drawings. Abbreviations can mean different things to different readers. For example, to a grader, "F.G." means *finished grade*. To a pipe fitter, it means *fuel gas*. Your drawings are part of your contract with your customer. That makes them legal documents, so keep them professional and avoid using slang. For example, use "mortar" rather than "mud."

If you decide to *texture* your drawing for better detail, be sure to use the correct symbols. Figure 2-14 shows standard symbols for various materials. Generally, the larger the scale, the more detailed the symbolic design should be.

It's not necessary to texture an entire object. A break line across the object, as in Figure 2-15, implies that the texture applies to the entire area.

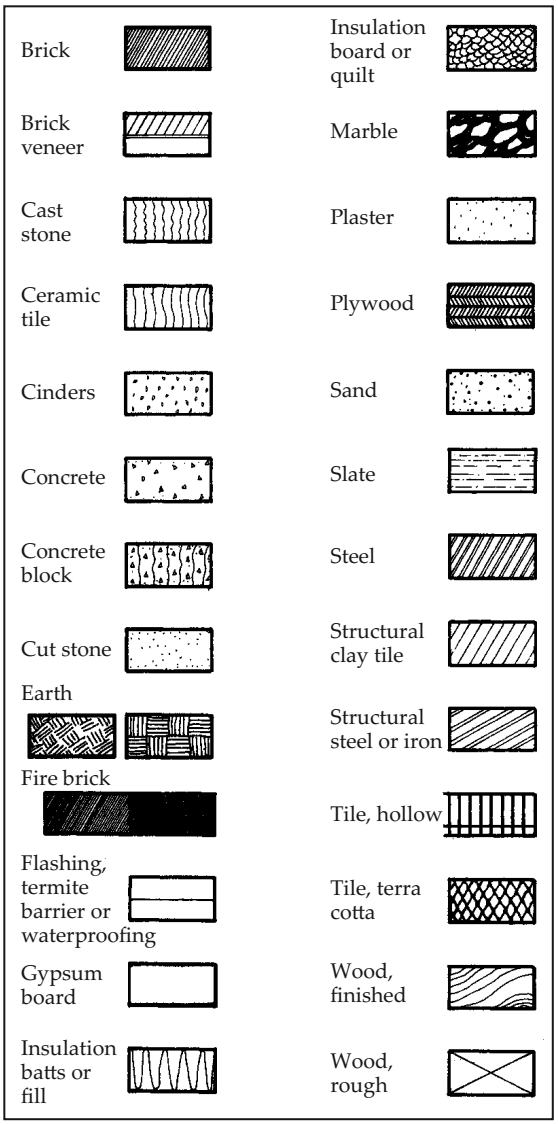

Figure 2-14
Architectural design symbols

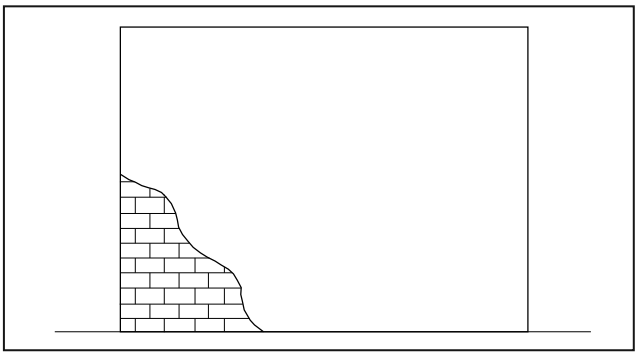

Figure 2-15
You only have to texture part of a drawing

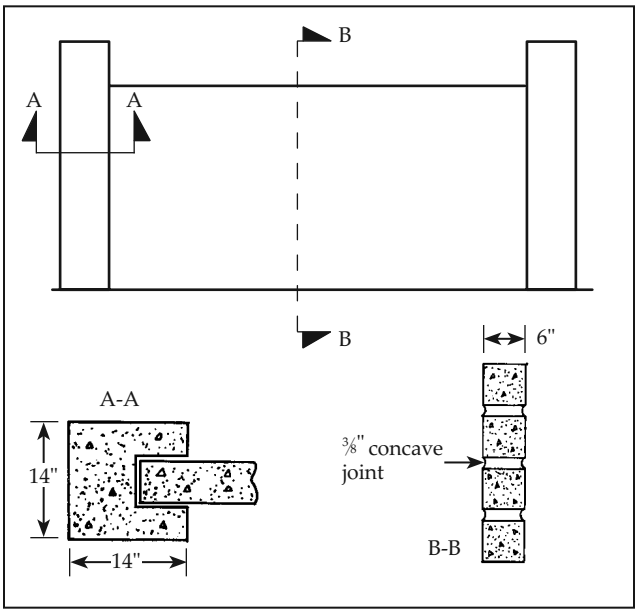

Figure 2-16
Cross section details

A *cross section* view shows what the item would look like if you were to cut through it and expose one of the cut sides. When labeling cross sections, first draw a line through the section you want to show. Label the two end points of each cross section line with the same letter, beginning with "A" and progressing through the alphabet for each successive line. Then label the corresponding detail of each section with the letters you assigned, A-A, B-B, C-C, etc. Figure 2-16 shows an example.

Use a *break line* to demonstrate that you've drawn only part of an object. That's the wavy line on the detail A-A of Figure 2-17. Break lines allow you to define excessively long sections. For example, you don't have to show all of a 100-foot-long wall. You can just show one or two sections. It's assumed that the

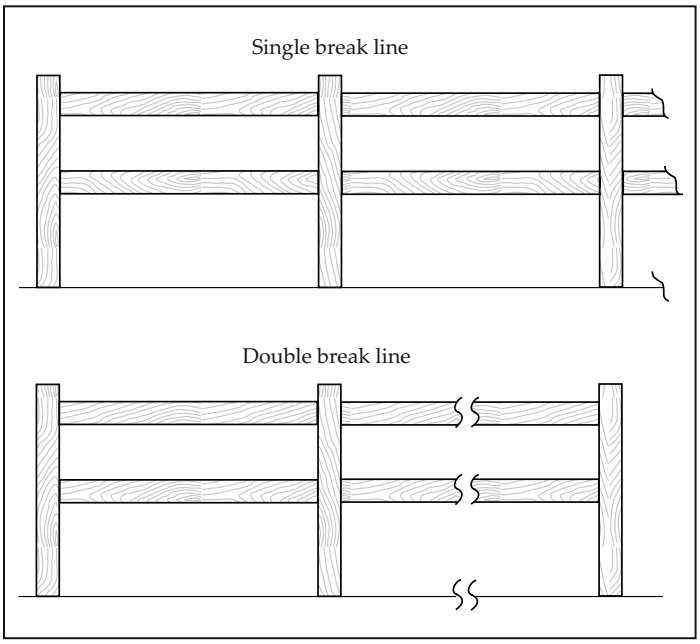

Figure 2-17
Break lines

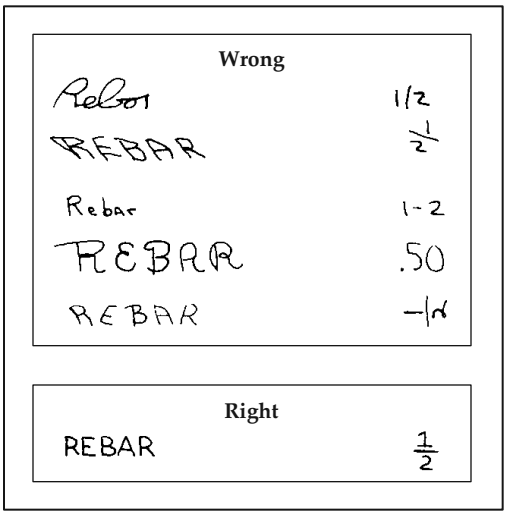

Figure 2-18
Make your lettering easy to read

wall continues outward from this line to some distant point. If you want to show both ends of something, but leave out the center part, use a double break line, which is also illustrated in Figure 2-17.

Good penmanship is a must when you draw plans. Use block printing and keep the letters vertical and evenly spaced. If people can't read your writing, they can't build to your plan. Figure 2-18 shows you what to strive for, and what to avoid, with regard to text and fractions penmanship.

You can avoid the penmanship issue by using lettering machines or transfer (rub-off) lettering to label plans. Both methods give you a variety of font styles and sizes to choose from. Lettering machines, which include personal computers combined with a printer, print text onto adhesive-backed tape that you apply to the plans. Some transfer lettering methods work much the same way, but others involve rubbing the letters directly onto the plans.

Producing Blueprints

As a professional fence contractor you need to know how to draw and read construction blueprints (plans). And you might as well learn to do them the *right* way. Blueprints help you buy the right materials for the job and get the permits you need.

Start with *vellum*, a firm, translucent paper especially made for original drawings. Vellum is available at most office, stationery, and drafting supply

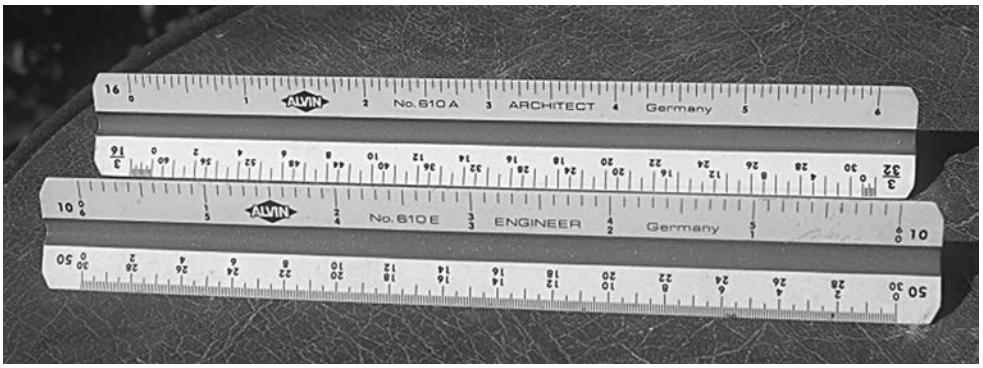

Figure 2-19
Architect and engineer scales

stores. You can get it either plain or with various-sized grid patterns that don't reproduce when the vellum is copied. Vellum comes in many sizes, but most popular sizes range from 8½ x 11 to 30 x 42 inches. I recommend you use 11 x 17 vellum or larger, even for detail drawings. It's less likely to get lost among other papers. To add a professional touch, you can have vellum printed with your company name and logo.

Copy machines for producing blueprints (or whiteprints) cost several thousand dollars. But there's no need to buy one. Just pay a visit your local print or copy shop to make the copies you need.

Here's some other equipment you'll need for plan drawing:

- a large, flat table or a drafting table
- T-square and triangles
- an assortment of drafting pencils, pens, rules and templates
- two types of scales — architectural and engineering. These scales are basically specialized rulers marked with calibrated ratios. You'll use the architect's scale for small projects (say ⅛" = 1 foot) and the engineer's scale on large projects (say 1" = 20 feet). You can get these at drafting and art supply stores. (See Figure 2-19.)

Plan View and Elevation View

I suggest a ⅛-inch-to-1-foot scale for your plan and elevation drawings. Use 1/8- or 1/4-inch scale for your detail drawings. In the scale box, note the scale you're using.

Number each drawing. I'd also recommend that you keep a file log describing the drawing, including the size and date, who drew it and the name of the client for whom it was drawn.

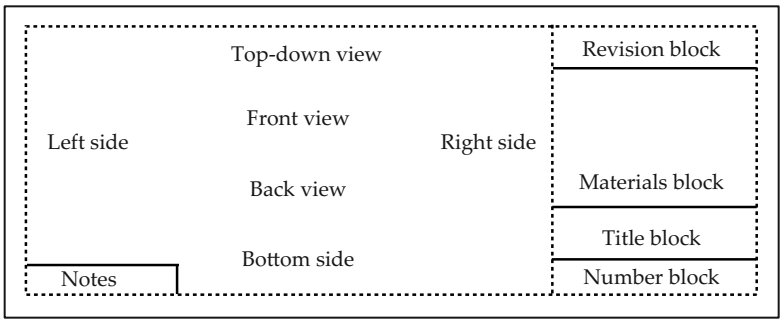

Figure 2-20
Suggested drawing layout

Figure 2-20 shows a suggested layout for your drawings. You'll find a revision block in the upper right corner of the vellum. Use that to record drawing revisions, the date you made them, and the reason. Before you revise a drawing, make a copy of it and file the copy. Then make your changes and give the new drawing a revision letter A, B, C, etc. The revision block is your history of changes for that drawing. You may want to add a revision column to your log. When you make a change to the drawing, put a small triangle near the change and draw a line from the triangle to the change. Then write the revision letter in the triangle.

The section just above the title block is where the materials (bubble) list belongs. Every item on the drawing gets a bubble (a small circle with a number in it). Each bubble's number corresponds to a description on the bubble list. If an item appears on the drawing more than once, you only need one entry for it on the bubble list. There can be any number of bubbles on the drawing with the number of that entry. This system makes it easier to count how many of each item you'll need, and put the amount in the materials box. You can draw the bubbles themselves using a circle template. When you're done you'll have a complete materials list for costing and ordering.

You probably don't need a materials block on the plan or elevation views. Put that on the detail drawings. What you *do* need on the plan or elevation view is a reference to the detail drawings. Circle the places you want to detail and then draw a line to a *split bubble*. A split bubble is a circle with a horizontal line drawn through it. The top half of the split bubble should indicate the detail drawing size, while the bottom half should indicate the drawing number.

If you want to put special notes on your drawings, there's a block in the lower left corner of the vellum for them. Notes might include calling for a certain brand of paint, its stock number, federal specification, number of coats, and method of application. Or better yet, type out a detailed set of specifications as part of the contract documents. This will allow you to include as much detail as possible, without cluttering up your drawing.

Detail Drawings

Many building materials swell, shrink, rot and warp. You need to keep that in mind when you design a fence or wall. That's why the plan view and elevation views aren't enough to do most jobs. You need some detail drawings.

On your elevation view, circle the areas that require construction details. Number each circle consecutively. Now, use graph paper and sketch a close-up detailed drawing of what is in each circle. Make this as accurate as possible.

Draw it to scale and call out all dimensions. Include everything you'll use to construct the detail.

You can have as many as six views on a detail drawing. In most cases, you'll start with the front view. When you walk around a fence, you'll see the right side, back, and left side. If you crawl under the fence, you'll see the bottom-up side, and if you climb over it, the top-down side.

You usually need the front and back view. The others are optional, but will be helpful when you want to be specific about how something goes together.

When you're preparing the detail drawings, you'll probably discover some problems that are easier to correct on paper than during construction. You may find that things don't fit together as you thought they would. Maybe you'll see an easier way to join a rail to a post than you first planned. Now is the time to make the appropriate adjustments — before construction begins.

You'll need about nine detail drawings for a typical wood fence:

1. corner post bracing
2. corner post lower rails
3. corner post upper rails
4. corner and line post to earth anchoring
5. line post lower rails
6. line post upper rails
7. pickets to rail attachment
8. picket top treatment or design
9. post top treatment or design

If the fence includes a gate, you'll want to include these detail drawings:

- gate top treatment or design
- hinge attachment and style
- latch attachment and style
- handle type and location
- bracing or attachment of gate boards
- left and right gate post anchoring
- overall view with dimensions and clearances

I know that's a lot of detail drawings. But if you do them at the beginning, you'll save time and money later. It only takes a little drawing time to save hours of rebuilding time. Also, detailed drawings will help you to do an accurate quantity takeoff for each item built into the fence.

Use Your Computer

If you'd prefer to use a computer to draw the plans, there are a wide range of CAD (computer aided design) programs available. These programs produce professional-looking drawings and have features that can simplify your accounting, purchasing and inventory, too.

Build a Model

Here's one final note on the subject of design. Sometimes a scale model will help you make the sale. Consider building a scale model from cardboard, balsa wood, or kits from a hobby or model railroad store. Both those sources have scaled trees, buildings, bushes, and even fences and walls.

Ordering Materials

Before you order materials, make a final review of your layout for the job. Does everything still make sense? This is the time to make corrections to your original plans. Maybe after all this, it turns out that a block wall is more suitable than a wood picket fence. Maybe your customer wants an alarm system or lights built in. Will you be painting the fence? In that case, get a few *whiteprints* of your drawings and apply the appropriate colors. Blueprints have mostly been replaced by Diazo prints or whiteprints, which have blue lines on a white background.

"No matter how much material you need, always allow a little more for waste and scrap. There will always be some material that's not worth using."

Here's a word to the wise: No matter how much material you need, always allow a little more for waste and scrap. There will always be some material that's not worth using. You'll spoil some by cutting it too short or at the wrong angle. Figure on about 5 percent extra for most materials.

Plan ahead and order your materials in advance. Your suppliers won't always be ready when you are. You may have a job scheduled for Saturday that requires 10-foot lumber, but when you go to pick it up on Friday afternoon, the yard only has 8-foot in stock. If you've made detailed drawings, your crew can at least begin to lay out the fence and dig post holes. But it's better to avoid this situation entirely.

Most suppliers will deliver to the jobsite on the day of your choice. But be aware that they usually carry loads for more than one customer, and they might not get to your jobsite until late in the afternoon. That's hardly a good time to start work.

When the material is delivered, try to offload it at convenient points along the fence line. It will save you time and energy if you can avoid carrying a skid of block a hundred feet or so. But be sure to balance convenience with security: Unprotected construction materials tend to vanish after nightfall. Have your materials delivered to as secure an area as possible. Lock up tools and equipment when you're not using them.

That pretty much covers the preliminaries; now it's time to start building. In the next chapter, I'll tell you all about wood fences and wood gates.

This page left intentionally blank

Chapter 3

Wood Fences & Gates

WHEN PEOPLE THINK OF FENCES, they usually think of wood fences. Wood has warmth and charm and, because it's a natural material, blends with the landscape. Wood also lasts a long time if kept dry, doesn't cost a lot, is easy to work with, and is a renewable resource (if our forests are managed intelligently). One notable exception is *redwood*, which is no longer a sustainable wood, as new redwood forests take so long to reach maturity. That's unfortunate, because it weathers nicely, isn't prone to insect infestation, and resists rotting.

Wood Varieties

After redwood, I like fences made of *cedar*. Cedar resists decay, swelling and shrinking, but it's not impervious to insects and needs periodic maintenance. It also tends to warp. Cedar is easy to work with, though, and is usually less expensive than an equivalent grade of cypress (which I'll discuss next). Its aromatic odor makes it a favorite for lining cabinets and closets.

Cypress is a wood that's resistant to both decay and insects. It's a strong wood that's easy to work with, which makes it popular for decking, shingles and fences. Cypress isn't easily cultivated, however, and the price is higher than equivalent grades of pine or fir.

Bald cypress is native to the swamps in the southeastern United States, and is one of a variety of cypress found around the world. *Monterey cypress* is indigenous to a small region of northern California, but it's protected and not available for commercial use. Europeans use *Mediterranean cypress* and Australians harvest their own native type of cypress. The kinds of cypress grown commercially in the United States are more closely related to fir and pine.

Fir, *spruce* and *pine* are all common commercially-grown woods. They're suitable for fences, but require care to protect them from decay and insects. Paint or clear-coat fences made from these materials to protect them from the weather. The coating should include an insecticide.

Hemlock is another evergreen used for fencing. It's easy to work with, has a uniform grain pattern and is light in weight. Hemlock, however, isn't resistant to insects or decay and does require a sealer and periodic maintenance.

Don't confuse the hemlock tree with the herb of the same name. The herb is poisonous; lumber from a hemlock tree is not.

Rough Cut vs. Milled Lumber

When you buy lumber, you ask for a specific size, like 1 x 8. This is the *nominal* (or *name*) size of the lumber before it's finished. A rough, unfinished, green 1 x 8 board may measure pretty close to 1 inch by 8 inches, but a finished, dry 1 x 8 will be smaller. You won't use much rough lumber that hasn't been either air dried or kiln dried. Unseasoned lumber tends to warp and bend as it dries. It's usually full of splinters and probably varies more in width and thickness. All these things make rough, unseasoned lumber harder to work with.

Lumber manufacturers give you a better product — one that's dried, milled and sanded. This material will be uniform in width and thickness, reasonably straight and fairly free of splinters. But it won't be as thick as rough cut lumber. For instance, a 2 x 4 is actually only 1½ x 3½ inches when milled. Figure 3-1 shows you the difference between nominal and finished sizes. Milling provides a harder, more weatherproof surface that's easier to sand and paint. In contrast, rough cut lumber is hard to paint properly.

Rough nominal	Finished dry	Finished green
1 x 4	$^{3}/_{4}$ x 3 $^{1}/_{2}$	$^{25}/_{32}$ x 3 $^{9}/_{16}$
1 x 6	$^{3}/_{4}$ x 5 $^{1}/_{2}$	$^{25}/_{32}$ x 5 $^{5}/_{8}$
1 x 8	$^{3}/_{4}$ x 7 $^{1}/_{4}$	$^{25}/_{32}$ x 7 $^{1}/_{2}$
1x 10	$^{3}/_{4}$ x 9 $^{1}/_{4}$	$^{25}/_{32}$ x 9 $^{1}/_{2}$
1 x 12	$^{3}/_{4}$ x 11 $^{1}/_{4}$	$^{25}/_{32}$ x 11 $^{1}/_{2}$
2 x 4	1 $^{1}/_{2}$ x 3 $^{1}/_{2}$	1 $^{9}/_{16}$ x 3 $^{9}/_{16}$
2 x 6	1 $^{1}/_{2}$ x 5 $^{1}/_{2}$	1 $^{9}/_{16}$ x 5 $^{5}/_{8}$
2 x 8	1 $^{1}/_{2}$ x 7 $^{1}/_{4}$	1 $^{9}/_{16}$ x 7 $^{1}/_{2}$
2 x 10	1 $^{1}/_{2}$ x 9 $^{1}/_{4}$	1 $^{9}/_{16}$ x 9 $^{1}/_{2}$
2 x 12	1 $^{1}/_{2}$ x 11 $^{1}/_{4}$	1 $^{9}/_{16}$ x 11 $^{1}/_{2}$
3 x 4 through 12	2 $^{1}/_{2}$ x width	2 $^{9}/_{16}$ x width
4 x 4 through 12	3 $^{1}/_{2}$ x width	3 $^{9}/_{16}$ x width
5 x and up lumber is $^{1}/_{2}$" thinner in height and width than nominal		
Dry is less than 19% moisture Green is over 19%		

Figure 3-1
Nominal vs. finished lumber dimensions

But don't totally dismiss rough cut lumber. Some people prefer the old, rugged look and want their fences built from this material. It complements western, Asian, or modern styles. The dominance of the grain lets the full strength of the lumber show through. You usually finish rough cut lumber by staining rather than painting.

Grade stamp	Meaning
S1E	One edge surfaced
S1S	One side surfaced
S1S1E	One side, one edge
S1S2E	One side, two edges
S2S	Two sides surfaced
S4S	Four sides surfaced
EV1S	Edge vee one side
CM	Center matched
D&M	Dressed and matched
T&G	Tongue and grooved

Figure 3-2
Dressed lumber grades

Moisture Content

Most wood contains a lot of water when it's first cut — up to 80 percent of its weight. The mills rack and dry the lumber so the moisture is reduced to a set percentage. Of course, it will still have *some* moisture in it. The grade stamp will tell you how much:

- S-Grn (surfaced green) has the highest water content — it hasn't been seasoned or dried.
- S-Dry (surfaced dry) is the most common grade sold. Its moisture content is below 19 percent.
- KD (kiln dried) lumber contains less than 15 percent water, and is your best bet if you need wood that won't warp, split or cup. It's also the most expensive, since it takes extra effort and time, and costs the most to manufacture.

Lumber Grading

Lumber mills plane and sand the wood to various degrees and grade the finished lumber accordingly. This is called *dressed lumber*. Since boards have four sides, you can buy lumber that's milled on one, two, three, or all four sides. Figure 3-2 shows abbreviations used for the various surfacing grades. I've also included grades EVIS, CM, D&M, and T&G, since they're fairly common.

Each piece of lumber is further graded for tightness of grain and the presence of knots. For fence building, you want to aim for the best appearance at the lowest possible cost. If you use a grade that's *too* good, you'll spend too much; if it's not good enough, the fence won't look first rate.

For structural work, such as wood retaining walls or balconies, lumber strength is important. The building inspector might reject the job and make you do it over if you use the wrong grade. Structural grading is divided into four categories:

1. board lumber, 1 inch or less thick
2. stud grade lumber, used in walls up to 10 feet high
3. light framing, to support light loads, as in home building
4. structural framing, to support heavy loads

Board Lumber

Board lumber is classified into #1, #2 or #3 Common grades. #1 Common is the best grade, with few, if any, knots. It's best for shelves, paneling and siding where appearance is important. You can clear-coat #1 grade boards. #2 Common and #3 Common have more knots and will usually be less expensive. If you're going to paint the surface, use #2 or #3 boards.

Tight, straight grain wood is the strongest. So a #3 Common board with tight grain and lots of knots might be stronger than a #1 Common with wide, loose-looking grain and no knots.

Stud Grade Lumber

Stud grade lumber doesn't have to be used for studs and all studs don't have to be cut from stud grade lumber. The term "stud" can also refer to any 2 x 4 or 2 x 6 that's used in a wall. Stud grade lumber is usually cut to 92¼ inches long and is intended for use in residential construction.

Light Framing Lumber

Light framing lumber is either *construction*, *standard* or *utility grade*. Construction lumber is the best of the three. Use it if appearance is a concern. Standard lumber is next best, followed by utility grade lumber, which is the least desirable.

Many mills mix two or more grades together and label the result something like "standard or better." That means all the lumber is at least standard grade and some of it may be better. Usually, at least 25 percent will be construction grade, but this varies from mill to mill.

Structural Framing Lumber

Structural grades include lumber that's 2 x 4 and larger. It's used for rafters, beams, loadbearing studs, posts, trusses and joists. *Structural select* is the best and most expensive structural grade lumber, followed by *light structural framing #1*, *#2* and *#3*, respectively.

Grading Redwood and Cedar

Redwood and cedar have their own grading codes. You'll probably be using a lot of cedar, and maybe some redwood. The heartwood of these trees is very resistant to rot, decay and insects, but the *sapwood* or *whitewood* is no more resistant than fir or pine. You can identify the heartwood, sometimes called *duramen*, by its red color. It comes from the center, or heart, of the tree. The sapwood is cream colored and nearer the bark.

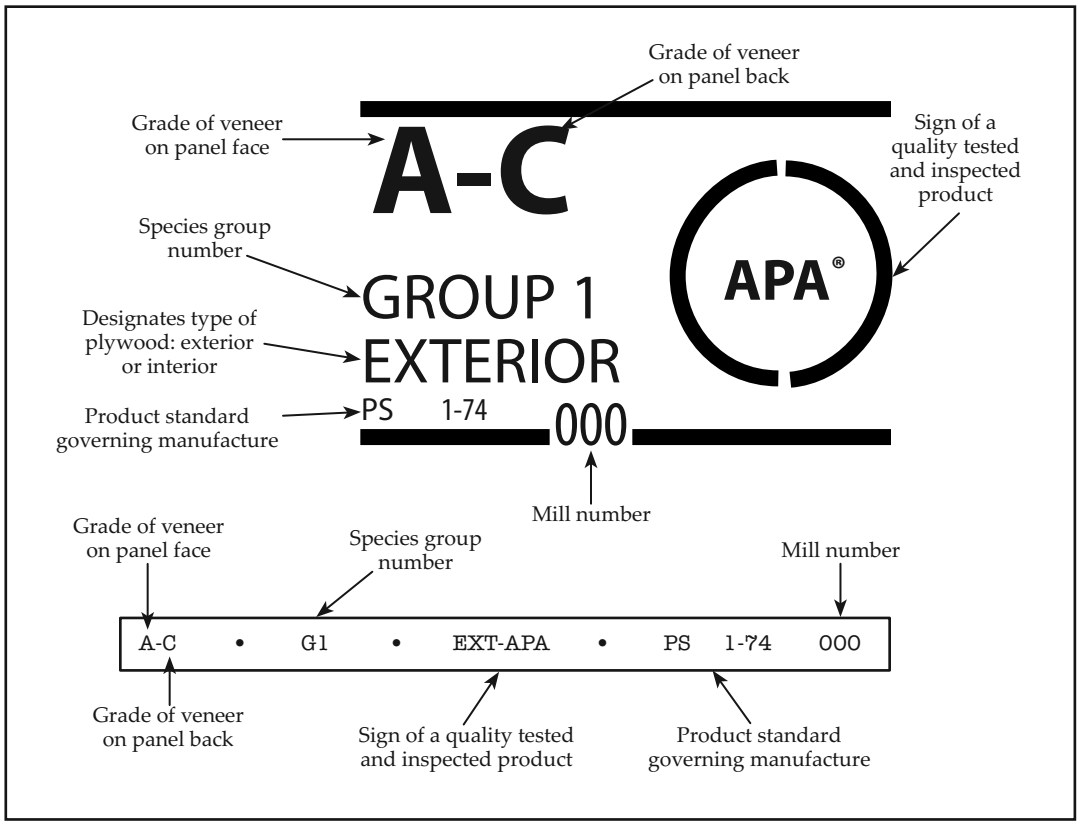

Figure 3-3
Lumber markings

Clear All Heart is the highest grade. It's used for siding, cabinets, and paneling. *Clear* is the next best grade, and contains some cream-colored wood. Clear is commonly used for fences and siding. *Construction Heart* comes from the tree's center, and is red, but has some knots and visual flaws. It's also commonly used as a fence material. *Construction Common* has some heartwood and some sapwood. *Merchantable* can be from either heartwood or sapwood. It usually has some loose knots and will be the cheapest of the grades.

You may also run across the terms *Select* and *Select Heart*. These are generally the most expensive grades, and are free from defects.

The grading association, mill number, and wood species are some of the marks that you're likely to find on lumber. See Figure 3-3 for additional lumber marking descriptions.

Grading Accuracy

Moisture content grading is fairly accurate. An inexpensive, hand-held probe can measure lumber moisture content to a fraction of a percent. Lumber grading is less precise, however. Nearly all building lumber is graded visually. That means the lumber inspector simply looks at each piece and decides what grade applies. Naturally, different inspectors can have different opinions.

If you get into a dispute about lumber grades, you can have the lumber re-graded by an independent inspector. The minimum fee will usually be several hundred dollars plus travel time. You'll probably have to supply a helper and a forklift for the inspector's use.

For me, grades are just a starting point. They get me to the right pile of lumber at the yard. I'm the final judge of which pieces are best suited for the job I'm working on. Lumberyards don't like it, but nearly all of them will let you pick through a pile to select the pieces you want.

If your supplier is delivering the order, I still suggest you hand pick the load in advance. If you don't, you may end up with an assortment of good and bad lumber, or worse yet, all the stuff no one else wanted. Even properly graded lumber can be warped and split.

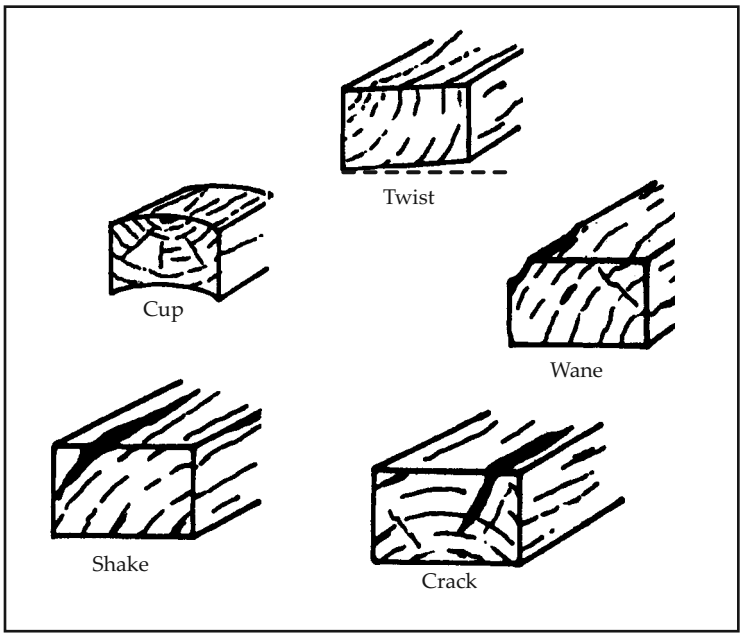

Figure 3-4
Lumber defects

When you're checking the lumber, keep an eye out for the following common defects, which are also illustrated in Figure 3-4:

- *Cup* — the surface isn't level; there's a concave or convex curvature.
- *Warp* or *twist* — the lengthwise surface varies from a true plane. Warped lumber won't sit flat on a flat surface. If any of the four corners don't touch the surface, the lumber is warped.
- *Wane* — there's a missing edge or corner somewhere along the length of the lumber. It usually happens when the piece is cut from the outermost area of the tree, where bark has been peeled off.
- *Shake* — a crack or split that follows the growth rings of the lumber.
- *Crack* or *check* — a split outward from the center of the tree.

Chemically-Treated Alternatives

Redwood, cedar and cypress heartwood are the most durable fence lumber options, but they're also expensive. Cost conscious alternatives include treated pine, hemlock, fir, or larch. Chemically treating the lumber under high

pressure protects the wood fibers from insects, dry rot, decay, and sometimes even from weathering. Weathering turns the wood from its natural red or cream to a silvery gray color. Treated wood can last 40 years or more.

Wood used outdoors and in contact with the ground should be redwood, cedar, cypress heartwood, or treated wood. Chemical wood treatment standards are determined by the American Wood Protection Association (AWPA). As a fence contractor, you should be familiar with these standards, which are updated annually. Go to www.awpa.com to get the latest information.

Wood treatments can have corrosive effects on fasteners. You may need to use hot-dipped or stainless steel screws and nails when working with treated wood. Contact the treatment manufacturer if you're unsure about what types of fasteners to use.

Use Caution with Treated Lumber

The chemicals in treated lumber are harmless to plants, animals, and people when contained within the lumber. But with age and weathering, some chemicals can leach into the ground. This can kill plants growing close to the fence.

If you ever have to tear down a fence built from treated lumber, be careful about how you dispose of it. *Never burn treated lumber.* The smoke will carry the chemicals with it. Until recently, chromated copper and arsenic were used in wood preservatives for residential applications. Both are dangerous. Why do you think the insects won't touch it? Arsenic is absorbed into the skin and accumulates in the body. Your body can't dispose of it. Continuous exposure can result in dangerous concentrations.

Always wear gloves when you work with treated lumber. If you're cutting treated wood, use a dust mask and eye protection. Try to collect as much of the sawdust as possible, using a plastic tarp, and dispose of it alongside municipal solid waste.

As a contractor building fences year after year you'll be exposed to potential health problems. Don't treat them lightly. For more information, contact the lumber or chemical manufacturers. Chapter 14 has more information on using treated lumber.

Why use treated lumber at all? Because untreated lumber rots, decays, and is prime food and lodging for many insects. Ants and termites (also known as white ants) love wood. To build their nests, they tunnel through wood, stucco, brick, block and even concrete. Treated materials or insecticides will kill them before they can do too much damage.

Termites not only live in wood — they raise their young on it. These insects are highly destructive, and live all over the United States. The least susceptible areas are the cold northern states of Maine, Vermont, New Hampshire, Michigan, North Dakota, South Dakota, Minnesota, Montana, and Wyoming. The most susceptible states are the warm southern ones: east Texas, Louisiana, Mississippi, Alabama, Florida, Georgia, South Carolina, and California.

Chemical Treatments You Can Apply

What about treating posts yourself? AWPA-approved options include borate (www.borax.com-timbor) and copper naphthenate (www.coppercare.us), but they won't be as effective as commercial pressure treatments.

Lumber Pricing

Some lumberyards price fencing material by the piece. Others sell by the board foot. Board foot measure is based on nominal sizes, not actual sizes. To keep things simple, any board less than 1 inch thick is considered to be 1 inch thick. A board 12 inches wide, 12 inches long and 1 inch thick (in nominal measure) has 1 board foot of lumber. A 2 x 6 that's 12 inches long also has one board foot of lumber. A 2 x 6 that's 10 feet long has 10 board feet of lumber.

> *"To keep things simple, any board less than 1 inch thick is considered to be 1 inch thick."*

An easy way to determine the amount of board feet per linear foot of board is to divide the nominal end area of the board by 12. Using a 2 x 4 as an example, the nominal end area is two times four, which equals eight. Dividing eight by 12, we get 0.67 board feet per linear foot. So if the board is 16 feet long, then the board contains 16 times 0.67, which equals 10.7 board feet.

Lumberyards buy lumber in lots of 1,000 board feet, usually abbreviated *MBF*. Figure 3-5 shows the board foot equivalents for common lumber dimensions. If you buy posts and rails by the board foot, this table will probably make conversions much easier.

Fasteners and Anchors

After selecting your lumber, you need to decide how to fasten it all together. You'll probably use some combination of nails, screws, staples, L- or T-angles or metal supports. You can anchor the posts in dirt, asphalt, rock, or concrete. Let's look at the options, starting with nails.

Nails

You've probably seen nail charts showing nail lengths and identifying each in "d" or *penny* numbers. The higher the penny size, the longer the nail.

Thickness	Width	Board feet				
		8′	10′	12′	14′	16′
1	1	0.67	0.83	1.00	1.17	1.33
1	2	1.33	1.67	2.00	2.33	2.67
1	3	2.00	2.50	3.00	3.50	4.00
1	4	2.67	3.33	4.00	4.67	5.33
1	6	4.00	5.00	6.00	7.00	8.00
1	8	5.33	6.67	8.00	9.33	10.67
1	10	6.67	8.33	10.00	11.67	13.33
1	12	8.00	10.00	12.00	14.00	16.00
Thickness	**Width**	**8′**	**10′**	**12′**	**14′**	**16′**
2	2	2.67	3.33	4.00	4.67	5.33
2	3	4.00	5.00	6.00	7.00	8.00
2	4	5.33	6.67	8.00	9.33	10.67
2	6	8.00	10.00	12.00	14.00	16.00
2	8	10.67	13.33	16.00	18.67	21.33
2	10	13.33	16.67	20.00	23.33	26.67
2	12	16.00	20.00	24.00	28.00	32.00
Thickness	**Width**	**8′**	**10′**	**12′**	**14′**	**16′**
4	4	10.67	13.33	16.00	18.67	21.33
4	6	16.00	20.00	24.00	28.00	32.00
4	8	21.33	26.67	32.00	37.33	42.67
4	10	26.67	33.33	40.00	46.67	53.33
4	12	32.00	40.00	48.00	56.00	64.00
Thickness	**Width**	**8′**	**10′**	**12′**	**14′**	**16′**
6	6	24.00	30.00	36.00	42.00	48.00

Figure 3-5
Board foot equivalents

Generally, the shortest nail you'll use is the 4d, which is 1½ inches long. The longest nail you're likely to need is 20d, or 4 inches. Anything larger than that is known as a *spike*. See Figure 3-6.

Nail Length

How do you choose the best nail for the lumber you're using? *Back nails* (nails that attach board stock to the rails) should be long enough to penetrate the thicker member by about twice the thickness of the thinner member.

A board with a nominal thickness of 1 inch is actually ⅝ inch thick. Using the "twice the thickness" calculation method, if you're nailing a 1 x 6 to the flat side of a 2 x 4, your nail should penetrate the 2 x 4 by two times ⅝ inch, which equals 1¼ inches. The 1¼-inch penetration plus the ⅝-inch thickness of the 1 x 6 equals 1⅞ inches. So in this case, you'd want to use a 5d or 6d nail.

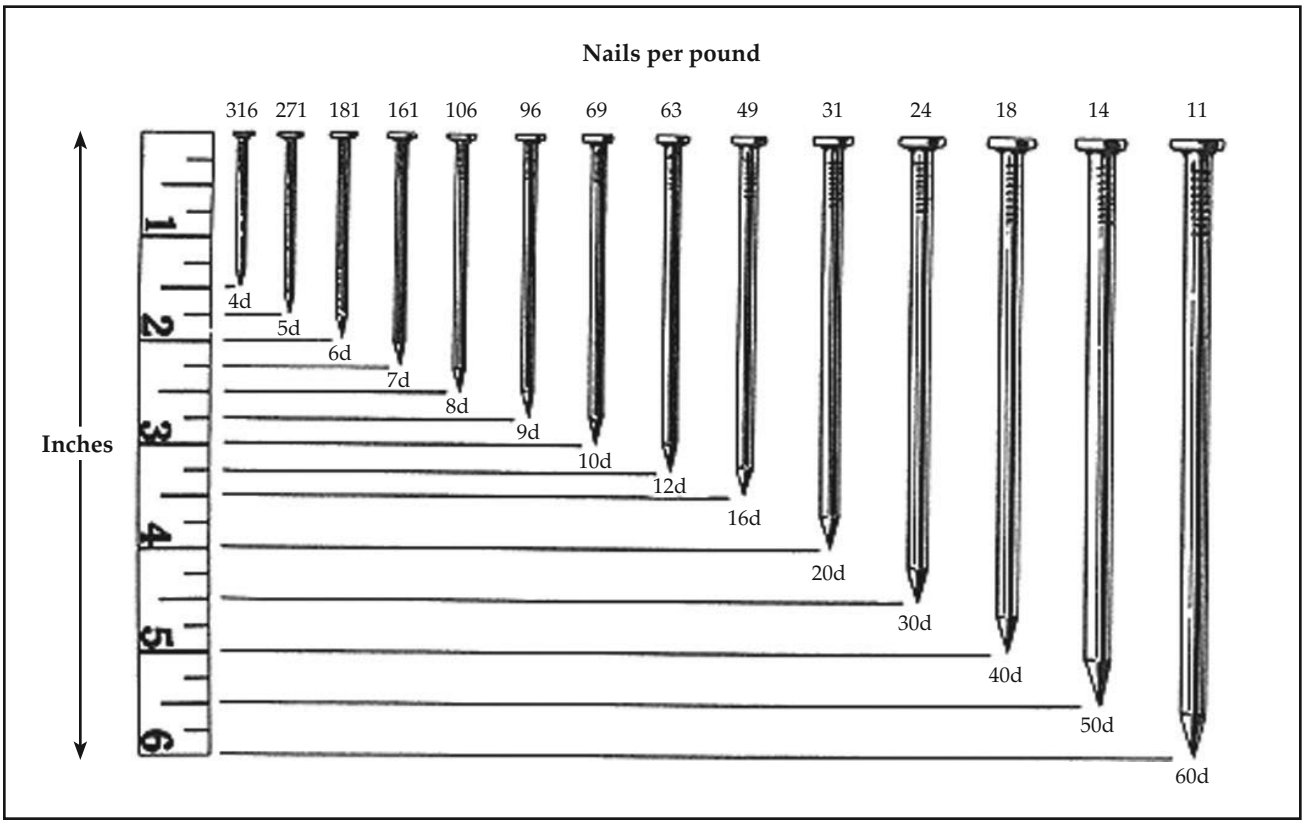

Figure 3-6
Sizes of common wire nails

If you use a nail that's too short, the board will pull off easily. If you use a nail that's too long, you can crack the wood or penetrate all the way through and come out the other side. But going through to the other side isn't always a mistake. Sometimes, for maximum holding power, you want to *clinch* the nail.

To do that, use a longer nail, so the point will come out the other side of the wood. Then bend this point at a 90-degree angle, flattening it against the back side of the board. The nail tip should protrude a minimum of ¼ to ⅜ inch beyond the board for proper clinching.

In the previous example, it would require a 2⅛-inch nail to penetrate the 1 x 6 and 2 x 4. Adding an extra ⅜ inch to allow for clinching brings the total to 2½ inches — so you'd use an 8d nail. You can clinch with any type of nail, but specially-designed clinch nails are available. The shank and tip are designed to make clinching easy. Always nail the thinner member into the thicker member unless the nails are clinched.

The longer the nail, the thicker it is. One problem with thick nails is that they tend to split wood, especially if you're nailing within a few inches of the end edge of a board. There are two ways to avoid this problem:

1. Pre-drill the nail holes. Use a drill bit that's ¾ of the diameter of the nail you're using.

2. Flatten the nail point so it cuts or punches through the wood fibers instead of spreading them. To flatten the point of a nail, place the nail, head down, on a hard surface, and lightly strike the point with your hammer.

Drive nails no closer to the edge of a 1-by fence board than half the board's thickness. Use two nails at each board-to-rail connection for 4-inch and wider boards (nominal) and only one nail for smaller boards. To maximize joint strength, don't nail with the shank parallel to the wood grain (known as *end-grain nailing*). You may need to use screws instead of nails. And if you toenail a board, drive the nails at a 30-degree angle. Use nails long enough so that one-third of the nail length is in the thicker member.

Choosing Nails with Holding Power

A fence may start out with flat, straight lumber, but exposure to the elements will eventually cause the boards to cup and warp. Common nails are no match for this kind of stress, so they tend to come loose.

One option is to use glue-coated nails, which are usually amber colored. The glue is activated by moisture in the wood, increasing the nail-to-wood bond. The problem I've found is that the glue sticks well to the wood but not to the nails. Eventually they'll loosen and pull out.

A better solution is *ring* or *deformed shank* nails. They have indented rings around the shaft or nail shank that hold the nails in place. Deformed shank nails are available with a barbed, helically-threaded or annually-threaded shank.

Choosing Nails That Don't Rust

Another problem with nails is that they rust and stain the wood or paint. *Blued* nails don't rust as easily. Their blue color comes from heating the steel until it forms an anti-rust oxide coating. Or you can buy *electro galvanized (EG)* nails. These are common nails that have a zinc coating applied with an electrical charge. The EG nails are good, but they can pull out, and the zinc coating is thin and will eventually fail. Also, hitting the head of one of these nails wipes off some of the zinc coating, leaving a bare spot that will rust.

Hot dipped zinc galvanized nails, however, meet all the requirements of holding power, rust prevention, and resistance to damage during nailing. They have a dull aluminum-like look. The difference is that the coating is thick and very rough. Roughness adds to the holding power once these nails are in place. The thick coating provides long-term corrosion resistance and helps them withstand hammer blows. If you want your fence work to be professional quality, use hot dipped galvanized nails. Be aware that hot dipped and *hot-galvanized* nails are not the same. Hot-galvanized nails don't have the uniform, strong bond between the nail and coating that hot dipped nails do.

There are times when you should avoid using zinc coated nails, however. Redwood and cedar react unfavorably to the zinc, resulting in stains. Aluminum nails are a good alternative. They don't rust and they hold fairly

well. They cost more than steel nails, and they bend too easily if you hit off center, but I still feel they're a good choice for redwood and cedar fences.

Screws

Screws are wood-holding powerhouses. Because of the way they twist into the wood, they're almost impossible to pull out. Screws should be long enough to penetrate through the board and into the thicker member by at least an inch. They're a must when attaching hinges and latches, since nails will pull out too easily. The downside to screws is that they cost more than nails, and take longer to install.

There are screws for sheet metal, plastic, and wood. For now, we're only concerned with wood screws. These are either *common head* (with a slot) or *Phillips head* (crosshead). Use the Phillips head screws if you're installing the screws with a power screwdriver or power drill with a screwdriver bit.

For attaching fence boards, I like aluminum or zinc coated decking screws with either a Phillips head or a square hole that receives a driver bit. These are designed to secure decking lumber to joists. The square or *box* head is the easier of the two to use. It stays in the bit better during installation.

Since deck screws are designed to be installed with a power driver and don't require a pilot hole, they save on labor costs. It takes 10 to 20 seconds to install a wood screw because you have to pre-drill it. It only takes 3 to 4 seconds to drive a deck screw. You have to figure out the time savings versus the additional cost. An extra 15 seconds or so per screw may not sound like much, but when you're driving hundreds of screws, it adds up.

Most screws are made of steel, so they rust, but *cadmium-plated* or hot-dipped screws resist rusting. Use brass screws if you're building a redwood fence. Redwood has tannic acid that reacts with most other metals and creates unsightly stains.

Staples

The fastest way to attach boards to rails is with staples. In fact, prefab wooden fences are usually stapled together. You can drive 2-inch-long (minimum) U-shaped staples into the wood with either an electric or pneumatic staple gun. It's fast and easy and does a good job. Most prefab wooden fences are stapled together. The double prongs provide twice the holding power of a nail, but less than a screw.

If you haven't used staples before, I recommend renting stapling equipment before you buy. If you're serious about fence contracting, then you should try several models before choosing the one that suits your needs. In any case, don't put your hand directly behind a board where you're driving a staple or nail. If the fastener is too long, you'll end up with your hand attached to the fence.

Always read specifications for commercial projects very carefully, because some designers won't allow you to use staples.

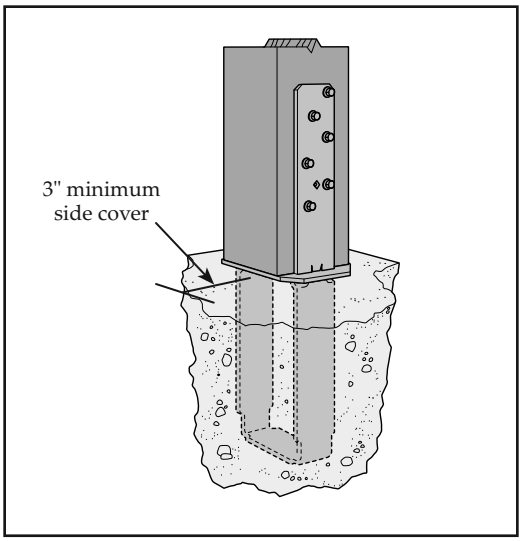

Courtesy of Simpson Strong-Tie Co., Inc..

Figure 3-7
Post anchor

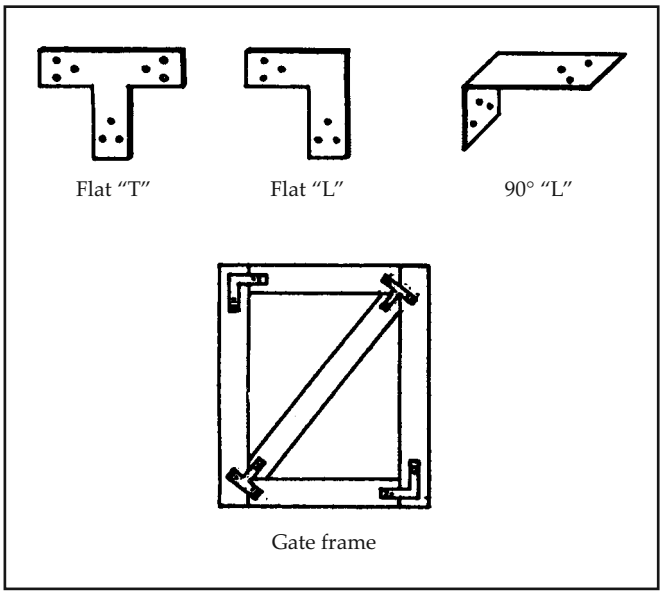

Figure 3-8
Metal reinforcing brackets

Post Holders and Brackets

Metal post anchors are handy for fence building. See Figure 3-7. If you use them, you don't have to bury posts in the ground, where the wood is vulnerable to rot and insects. Instead, you create a foundation of concrete and set the post anchor in the concrete before it hardens. Then, after it hardens, fasten the posts to the holder with nails, screws or bolts. Post holders are made of steel, so they're best for fences that will be painted.

"Metal post anchors are handy for fence building. If you use them, you don't have to bury posts in the ground, where the wood is vulnerable to rot and insects."

There's another advantage to metal post holders. When the post finally fails, you can just put another post into the holder, which should still be intact. This is much easier than having to break out the concrete and start over. It's a good selling point too, when you're trying to get the job. I always clean, prime and paint my metal hardware before I install it, to prevent rusting — which is another selling point.

I recommend that you use brackets when you put gates together. They make for a stronger, longer-lasting gate. Figure 3-8 illustrates one way to use L- and T-brackets. You can also use the 90-degree L to secure square corners.

Setting Fence Posts

Ready to plant a post? I'll assume you've read Chapter 2 on layout and design and know where the posts are going. So, now you'll dig a hole, put the post into it, backfill with dirt, and go on to the next one. Right? *Wrong!*

When you do that, you make a cozy home for bugs while the post decays from contact with the wet ground. You also fail to supply a firm foundation for the fence, so a strong wind will eventually blow it over.

To set a fence post properly, start by digging the right size post hole. For a solid board fence, that will vary, depending on the following factors:

- post size and spacing
- fence height
- soil stability and type
- expected wind load

As a general rule, in medium soil, with posts on 8-foot centers, the post holes should be 4 inches wider than the widest dimension of the post, with a minimum of 8 inches in diameter.

Most posts should be set into the ground a depth of one-third of the fence height. However, I recommend that holes be a minimum of 24 inches deep for a 4-foot fence, 30 inches deep for a 6-foot fence, 42 inches for an 8-foot fence and 48 inches deep for higher fences. Add 25 percent to the diameters and depths given above if the posts are set on 10-foot centers. Metal posts should have post holes that are at least three times the diameter of the post.

In very cold areas you may have to go even deeper to get below the frost line. I recommend that you make the bottom of the hole at least 6 inches below the frost line. If the post isn't pressure-treated, apply a wood preservative to the portion of the post that will be below grade.

Power augers are excellent post hole diggers, especially in hard or rocky soil. If you use a small gas-powered auger, it works better when you have two people hold it.

Note how the post auger powerhead shown in Figure 3-9 has four handles. If access allows, use a truck-mounted auger, especially where there are lots of rocks, or where you have to dig through asphalt in a driveway or parking lot.

Power augers don't work well in sand. All they do is stir the sand, and when you extract the auger, most of the sand remains in the hole.

Even if you do most of your digging with power tools, you'll need a manual post hole digger (also known as a *clam shell shovel*). They have two opposing handles and blades that are hinged together. See Figure 3-10. Post hole diggers help you clear out any dirt remaining in the hole after you drill.

Figure 3-9
Gas-powered auger

Figure 3-10
Digging with a post hole digger

The bottom of each post hole should be about 4 inches more in diameter than the top of the hole. This wide section acts as a *key*, which holds the post in place against vertical pull-out. Use your clam shell shovel to widen the hole. Here's a tip: It's messy, but sometimes to your advantage to add a little water in the hole as you dig. The water softens the soil and makes digging easier.

After digging the post hole, fill the bottom 6 inches of each hole with stone or gravel for drainage. The gravel drains water away from the post and lets moisture percolate into the surrounding earth. Next, set your post in place and prop it up plumb, using braces to hold it in place. Then pour 2,500 psi concrete in the hole, filling it completely. Tamp this down and refill until you're about 2 inches above ground level. Shape the above-ground concrete so that it's 2 inches high on the post and slopes away from the post in all directions. This *water shield* drains water away from the post.

At this point, recheck for height and plumb and make any necessary adjustments. Then leave the posts plumb and aligned until the concrete sets up. See Chapter 4 for a description of the various concrete mixes you can use.

When all the posts are in place, give the concrete five or six days to set. It takes that long for the concrete to harden and cure properly. If you rush things, the concrete may fracture and fail from the stress you put on it when you nail the rails and boards. If that happens, the first good wind gust may topple the fence.

Figure 3-11
Installing a rail

If you can't wait five or six days, there are alternatives that will allow you to start work on the fence sooner. The first is to use Type III high-early strength concrete, which sets up in three days. High-early concrete is like Type I regular concrete, except it has calcium chloride added at 2 percent, by weight. High-early concrete can also be poured during cold weather because of the additional heat generated during hydration. But if you use high-early concrete, let a concrete plant mix it for you. If more than 2 percent calcium chloride is added to the mix, it will be detrimental to the strength of the concrete.

You can also shave off some required waiting time by minimizing stress on the concrete post footings. For example: Screw the rails to the posts instead of nailing them and use a pneumatic nailer to install the fence boards.

Installing the Rails

Once the concrete has cured, it's time for the back rails. Install two rails for fences less than 5 feet high, three rails for fences 5 to 7 feet high, and four rails for higher fences, like the one in Figure 3-11. You can install rails flush against the posts or, for added strength, set them in grooved joints cut into the posts. I prefer 8-foot-long rail boards instead of 16 foot. They're cheaper, straighter and easier to transport.

If the fence isn't climbing up or down a hill and you want everything to be level, then start at an end or corner post. String a line from that post to the end or corner post at the end of that run of posts. The line should be 8 to 12 inches below the top of each post, or at the point where you want the top rail to be. Hang a string level on the cord and adjust one end until the line is level from one end to the other. Now make a pencil mark on each post where the stringline crosses that post. These marks are where the top rail will attach. Don't worry about the bottom rail yet.

Figure 3-12
Finished wood fence frame

Figure 3-13
Installing the board stock

Measure the length between posts and cut each top rail to the appropriate length. You'll have slight variations in distance from post to post. Install the top rails either with joist hangers or by toenailing them into place. Check each rail with a level as you nail it in place.

If you're building a two-rail fence, the next step would be to measure down from one top rail to your selected location for the bottom rail, which should be somewhere between 2 and 12 inches from the ground. You could then take that measurement and apply it to every rail piece, but it's faster to make a *jig*. Simply cut a 1 x 4 or other lumber to the measurement of the distance between the two rails. Use this jig to mark the location of each bottom rail. Just put the jig against the post, flush with the bottom of the top rail, and mark the post at the bottom of the jig. The mark is where the top of the bottom rail should go. Measure and cut your bottom rails and attach each one the same way you attached the top rails. Figure 3-12 shows a finished wood fence frame.

Mounting the Board Stock

Now you're ready to mount the board stock or fencing, as shown in Figure 3-13. Start at one end and plumb and level the first board. Attach it to the rail. Continue attaching the boards until you're done, leaving some space between them for expansion.

Using a spacer made from a piece of plywood or a metal strip, allow a $\frac{1}{16}$-inch space between boards up to 4 inches wide, $\frac{1}{8}$ inch for boards 6 and 8 inches wide, $\frac{3}{16}$ inch for boards 10 inches wide and $\frac{1}{4}$ inch for 12-inch-wide

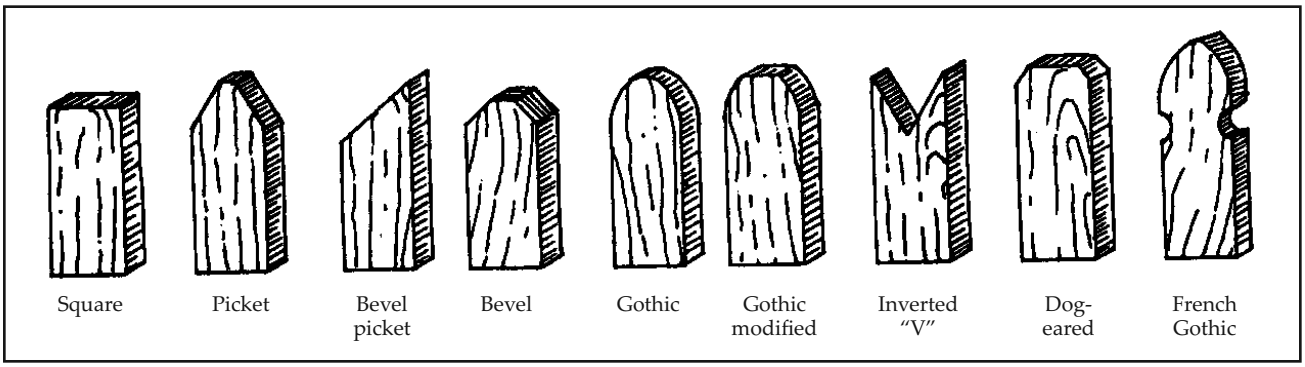

Figure 3-14
Fence board designs

boards. If you're installing a picket fence, you can use a picket for your spacer. Keep your level handy and check frequently as you proceed.

To avoid a situation where you get to the end of the fence and only have room for half a board, you'll need to do some measuring and a little math before installing the boards. We'll discuss the math in Chapter 16.

Figure 3-14 shows you several designs for the board tops. Many lumberyards offer boards with pre-cut patterns … dog-ears are probably the most common.

Maybe you prefer to cut the board top designs yourself. Do this before installing the boards. It's easy to do with a radial arm, table, band, or jig saw. As you drive around town, you might see a design you like. Ask the property owner if you can trace the pattern. If you offer to replace a few broken boards he may even let you take one or two to use as a template. Another option is to create your own design. Make a full-size drawing of your design; when you're satisfied with it, make a template from plastic, metal, cardboard, or plywood.

I recommend that you keep the bottoms of board stock *above* the ground. Not all fence builders follow this advice, but lumber in contact with the ground is more susceptible to decay and insect damage. It's also harder to cut grass and pull weeds when a fence touches the ground. Keep the boards 2 or 3 inches above ground level. You may even want to go higher — some lawn mowers need 6 inches of clearance.

If the boards *must* touch the earth, seal the board ends before you install them. The best choice is to soak the ends in preservative or brush on a coating. A little extra time and effort now will result in a much more durable fence. In fact, it's a good idea to seal the board ends even if they don't touch the ground. Rain runs down the lumber and hangs at the bottom edge. Unsealed lumber will absorb this water, eventually causing the wood to rot.

If you're going to paint the fence, dip the ends or the entire board in paint before installation. If you're going to clear-coat the fence or leave it unfinished, brush a clear sealer on the cut edges. You'll need three coats to protect the

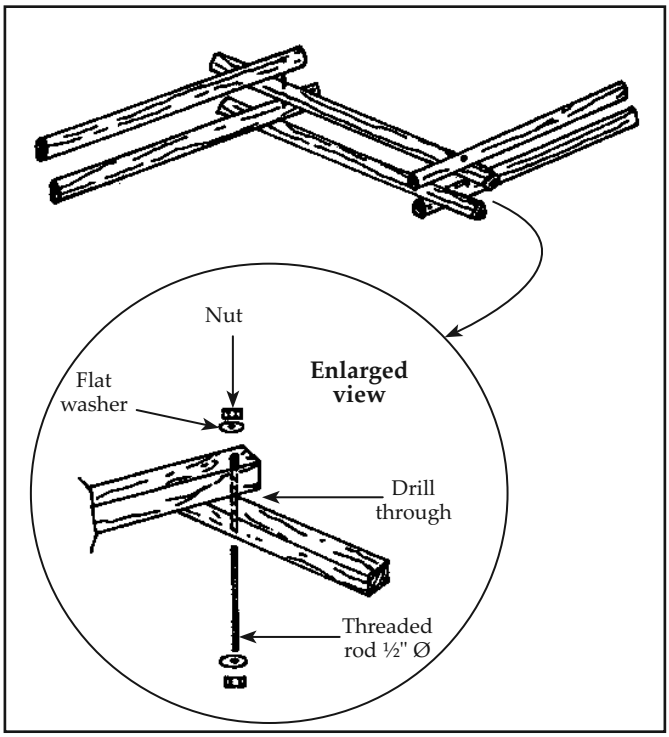

Figure 3-15
Anchoring a split rail fence

wood completely. Also, run a bead of exterior silicon caulk over the top joints between the boards and rails to prevent water from getting between them. You don't have to caulk the bottom joints. When you're selling the job, be sure to tell your prospective customer you're going to do all this. It usually helps him see that he's going to get a better fence from you than from the low bidder.

Wood Fence Designs and Variations

Here are some of the most popular wood fence designs. There are probably hundreds, so I'll just cover the most common ones.

Split Rail

Many years ago when wood was plentiful, people simply cut down a tree or two, split the trunk with a few wedges, and stacked up a fence. The fence was laid out in a zigzag pattern to keep it from falling down. And so the *split rail* fence was born.

Today we do much the same, except that we anchor each joint with spikes or threaded rod (all-thread). Spikes are just hammered into place, but the threaded rod takes a little more work. Drill a hole slightly larger than the rod through each piece of lumber. Then thread the rod through the holes. Use a flat washer and a bolt on each end of the rod to complete the project. Figure 3-15 illustrates this method.

Picket Fences

As lots grew smaller, zigzag fences became impractical because they took up so much space. *Picket* fences are a better choice. You can minimize costs by leaving large spaces between the pickets. Pickets are manufactured in 2½-, 3- and 4-inch nominal widths and 4-, 5- and 6-foot lengths. Round and half-round pickets are manufactured in 2-, 2½- and 3-inch nominal diameters and in 4-, 5-, 6- and 7-foot lengths. Sawn pickets are available in 3-, 4-, 5- and 6-foot lengths. Molded picket fences, like the one in Figure 3-16, are manufactured ⅝ inch thick for pickets 2 or 3 inches wide and ¾ inch thick for wider boards. Picket fences are usually more decorative than physical barriers; but they do mark boundaries and offer some wind, snow, and sun protection. And who doesn't dream of the cottage with a white picket fence in front?

Sapling Fences

Sapling fences are inexpensive because they're usually built in rural, wooded areas where materials are readily available. Cut as many small trees as you'll need and nail them to the fence rails, as shown in Figure 3-17. The saplings should be no more than 1 or 2 inches in diameter. These fences make good snow and weather shields and are a barrier to small children and animals.

Figure 3-16
Picket fence

Because you leave the bark on sapling fences, you can't effectively paint or treat them with preservatives. They eventually rot, and they're prone to attack by insects. The most durable sapling fences are oak, hickory, black locust, western juniper, and Osage orange. You can expect those to last for 15 years or more.

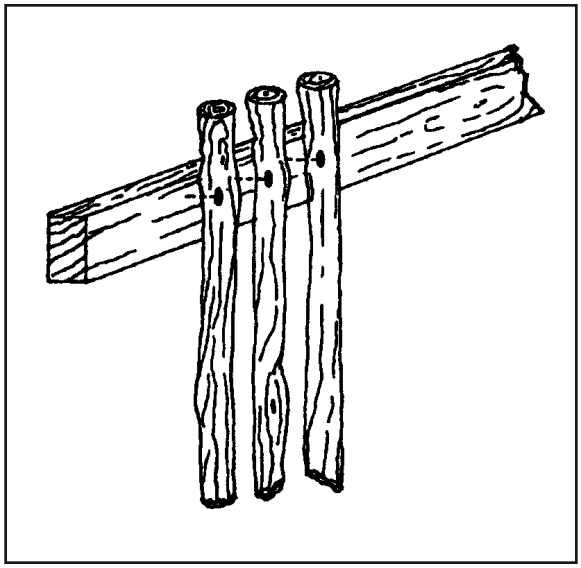

Figure 3-17
Attaching saplings to fence rails

Reed Fences

The *reed* fence is a variation of the sapling fence. Most reed fences are built with bamboo, which is technically a type of grass. Bamboo has gained popularity as a fence and building material (as well as being used as a textile) because of its regenerative properties, natural beauty and strength. You can use either whole or split bamboo stalks, and always pre-drill the nail holes.

Split bamboo is usually tied or woven into a screen that you attach to the fence rails. As with saplings, bamboo will have to be replaced every few years. It does offer snow, sun, and weather protection, and will contain small children and animals — assuming they aren't very adventurous or aggressive.

You can also buy woven fencing made from softwood slats or bamboo. The wood is split into thin slats and then woven together with wire or cord. People use these for sun screens on patios and windows. You just hang them on nails or screws from a frame or rafter with the wire clips attached to their top rails. Figure 3-18 shows how a woven bamboo fence can add a quick dose of privacy to a yard.

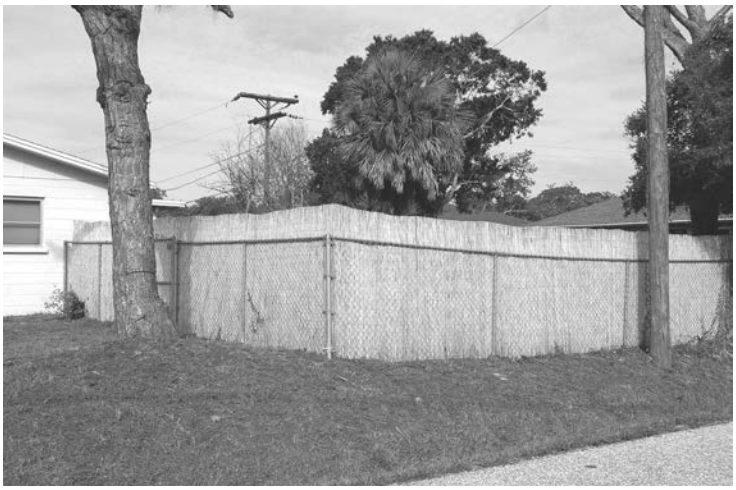

Figure 3-18
Bamboo fence

Grape Stake Fences

Grape stake fences are generally made from 2 x 2 split redwood slats hung vertically from rails. These slats or stakes are usually sold only in 3- to 6-foot lengths. They're inexpensive and, because they're redwood, they last several years. Vineyards use these stakes to support grape vines. Grape stake fencing is highly resistant to decay and insects, and it weathers to a nice silver gray that blends with most surroundings. Watch out for splinters because this is split, not milled, lumber.

Figure 3-19
Wire-bound fence

Wire-Bound Picket Fences

In a *wire-bound picket* fence, the pickets are strung together by galvanized or aluminum wires. That makes them easy to roll up for storage or transport. The pickets can be spaced 2 inches or 4 inches apart.

These fences are sold in 50- or 100-foot rolls and the pickets are usually made from cedar, spruce, redwood, fir, hemlock, or pine. See Figure 3-19. The pickets are commonly 1½ inches wide, ⅜ inches thick, and 4 or 6 feet high. They can be painted, stained, or pressure-treated.

Slat Fences

Slat fences are 1 x 1 or 1 x 2 lumber hung vertically from rails. The slats differ from grape stakes in that they are cut, not split, lumber. The lumber can be redwood or any of the softwood varieties. Slat fences are good wind breaks if you build them with an open design — with slats spaced one slat apart. The slats are cut from standard lumber and are available in lengths from 2 to 12 feet. Figure 3-20 shows a few slat fence styles, including a *lath and slat* fence. It's the same fence except you intermix or alternate between the small and large slats. Another variation on the slat fence design is the *walk* or *railing* fence, in which the slats are spaced farther apart.

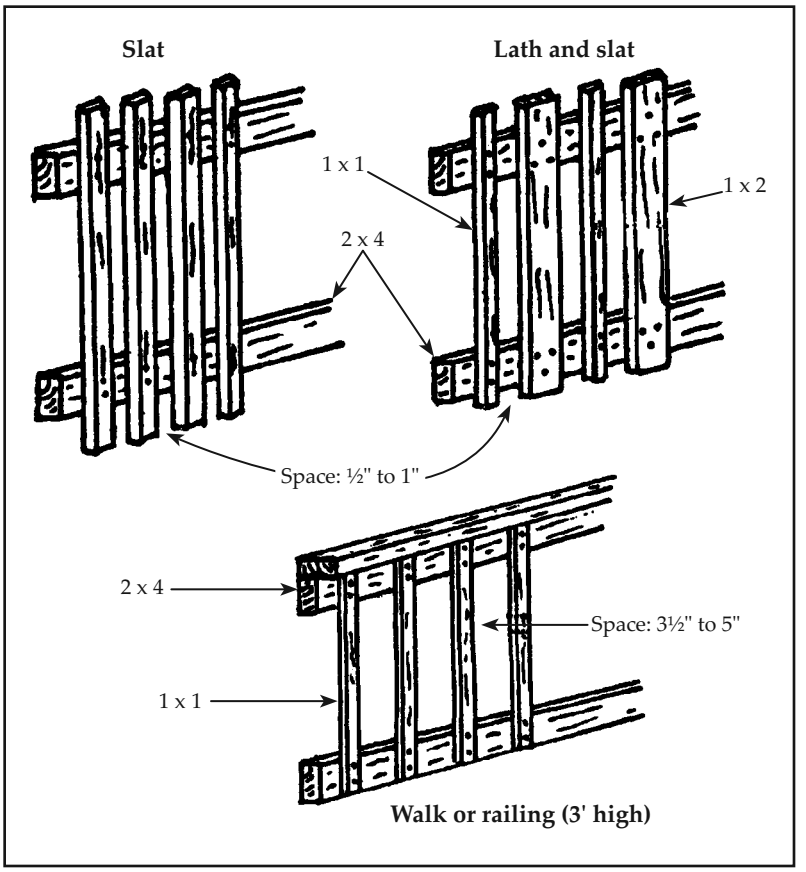

Figure 3-20
Slat fences

Post and Rail

Post and rail fences are commonly used to contain animals on farms. These are easy fences to build, but lack horizontal strength. They have a crisp, clean look, and are found in both rural and urban areas. As the name implies, you use only posts and rails. The rails can be 4 x 4, 2 x 4, 2 x 6, 2 x 8, or board lumber. Most post and rail fences have between one and five rails, and may include rails on both sides of the posts. Some of these fences have rails butted together at the posts, while others have rails overlapped at the posts. The post and rail fence in Figure 3-21 has rails that are running through the posts.

Square fence posts are usually 4 x 4s and rectangular posts are 3 x 4s. They're sold in lengths ranging from 6 to 12 feet. Round and half-round posts range from 2½ to 8 inches in diameter. They're sold in 6½-, 8-, 10-, 12- and 14-foot lengths.

There are many variations of fence posts, with the *flattop* post being the most common. See Figure 3-22. As the name implies, it's cut flat on the top. A *chamfered* post is cut at an angle on all four sides to form a truncated pyramid. A *diamond-point* post is cut at an angle on all four sides to form a pyramid. A *domed* post is cut on all four sides to form a four-sided dome. A *pencil-point*

Courtesy of Annie and Lee Adams

Figure 3-21
Post and rail fence

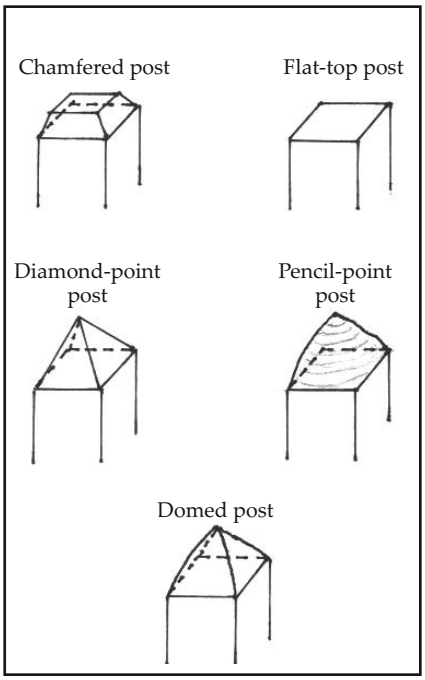

Figure 3-22
Post top styles

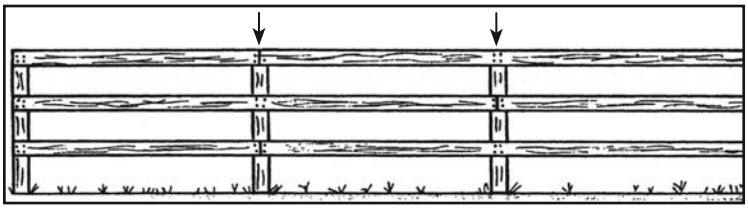

Figure 3-23
Staggered rail joints

post is rounded on all sides to form a cone.

If these fences will contain large animals, use heavy, well-anchored posts. Use 2-by lumber for the rails and secure them to the posts with bolts. Use enough rails so an animal can't stick its head and neck through the opening. Like us, cows and horses believe that the grass is greener on the other side of the fence, so they'll poke their heads through and munch all day. Unfortunately, this is pretty hard on a fence.

Fasten the rails to the side of the posts where the animals will be contained. With the rails on the inside, any pressure from an animal leaning on it will be transferred to the post rather than the board fastener. If you're on 8-foot centers between posts, use 16-foot boards for the rails. To strengthen the fence, stagger the rails so that the joints between boards fall on alternate posts, as shown in Figure 3-23.

Avoid using white paint on an animal containment fence, especially around horses. They chew on fences. Black tar base coating seems to discourage this — probably because it doesn't taste so good. White fences look great, but an application of hot tar will make the fence last longer, protect the wood better, and be easier to maintain and repair.

Board Fences

The last group of wood fences I'll discuss is loosely termed *board* or *panel* fencing. The construction is much the same as for post and slat fencing, but with the boards spaced closer together. You can use any size board lumber you want. Most people prefer 1 x 4, 1 x 6, or 1 x 8 redwood, cedar, pine, or fir. Board fence heights can vary from a foot or two to 16 feet, with most falling in the 6- to 8-foot range.

Figure 3-24
Shadow box fence

Board fences provide excellent privacy and security, and they're great for containing children and pets. However they do block out sunlight and the view. This is especially true of *solid* board fences, which have very little space between the boards. The large flat surface also blocks wind flow, which makes proper post anchoring very important. To reduce wind resistance, place boards on alternate sides of the top and bottom rail. Another advantage of the alternating-board design (also called a *shadow box* fence), as shown in Figure 3-24, is that both sides look the same. That makes them good for fencing between neighboring yards because nobody has to look at the back side of the fence.

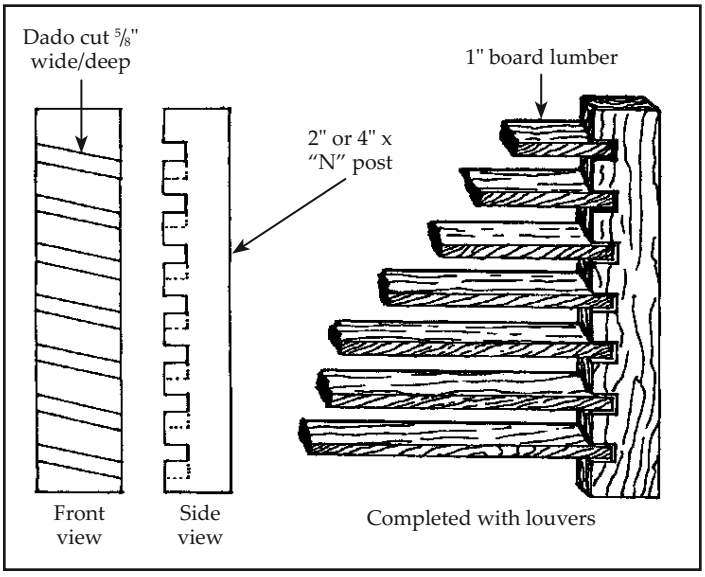

Figure 3-25
Horizontal louver fence

Louver Fences

Vertical and horizontal *louver* fence designs also let a certain amount of wind and sunlight pass through, without compromising privacy. As with Venetian blinds, when you look through these fences at just the right angle, you can see both in and out. But the straight-on view is partially, or sometimes completely, blocked.

Figure 3-25 shows you a basic horizontal louvered fence design, with louvers inserted into angled cuts in the posts and fastened with 4d nails at their ends. In contrast, vertical louver fences utilize grooves in the top and bottom rails.

Panel Fences

A *panel* fence starts with a post and rail frame. The panels — which can be a variety of materials, including plywood, safety glass, fiberglass or boards

Courtesy of Michael Atcheson

Figure 3-26
A combination of wood and metal pipes strengthens a fence

Figure 3-27
Woven fence

— are secured inside the frame. You can use quarter round trim on both sides of the panel to hold it in place, or groove the post and rails to accept the panel. To allow for expansion, leave a ⅛-inch gap along the long edge of a plywood panel and ¼ inch at the end of the panel.

Steel pipes can be used as posts on tall wood fences in high-wind areas for additional strength. Figure 3-26 shows an 8-foot privacy fence with 40 gauge galvanized iron pipes instead of wood posts. The rails are bolted to the steel pipes with U-clamps.

Woven Fences

Another attractive board fence option is the *woven* (or *basket weave*) fence, seen in Figure 3-27. As with shadow box and panel fences, woven fences look the same on both sides. The drawing in Figure 3-28 shows you two ways to build a basket weave fence. Note how each board is attached to the opposing sides of adjacent posts.

Public Playground Fences

For wood playground fences, if the distance between rails is less than 45 inches, mount the rails on the side of the fence opposite the play area and space the fence boards at a maximum of 1¾ inches apart. This will prevent children from climbing. If the rails are farther than 45 inches apart, however, you can increase the board spacing to as much as 4 inches.

Wood Gates

A fence or wall isn't much good if you can't get through it to go in or out. So you build a gate — the gateway to your world. Gates are symbolic of possession to some people. They go to great lengths to secure their gates with alarms

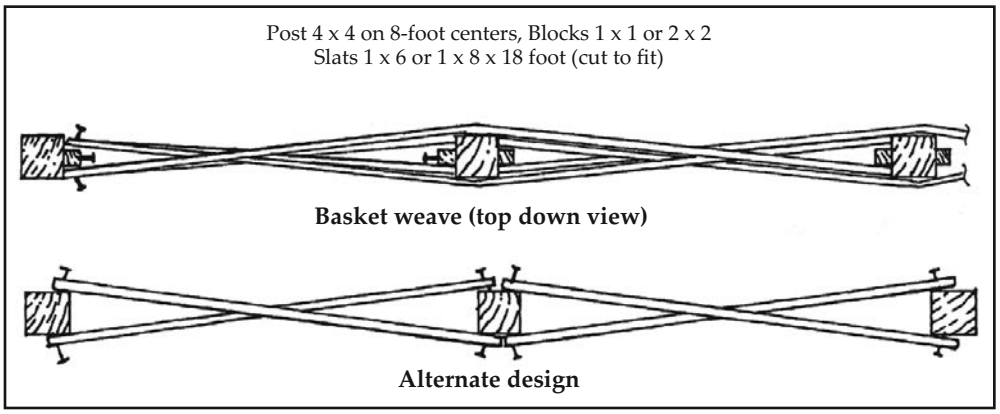

Figure 3-28
Woven fence construction details

and locks. Others design gates just for decoration. Regardless, they're an essential component of most fences.

In this section, I'll explain how to select and build gates. I'll also show you what can go wrong with gates, how to design them to prevent early failure, and what materials to use. Keep in mind that every gate is different. These guidelines will be a good starting point, but you'll have to design each gate you build to suit the particular situation.

Figure 3-29
Warped gates

Figure 3-29 shows a gate that's warped in both directions; it doesn't fit snugly any more. The builder probably used unseasoned or wet lumber for both the rails and the face lumber. Don't make that mistake. Always use kiln-dried lumber for your gates. Redwood and cedar are the best choices, followed by cypress, pine or fir. Use structural grades, because a gate's supporting members are subjected to a lot of stress.

Short rail sections — for instance, two 6-foot sections instead of one 12-foot section — are better. The shorter the lumber, the less it warps and twists. Nails have a tendency to pull out, so it's best to secure the post and rails with nuts and bolts or metal supports. Use heavy duty hardware and hinges. After all, your customers expect their gate to last for years.

Gate Design and Location

For a gate to do what it's designed to do, it has to be big enough to let people, animals, and equipment pass through easily. A gate for people to

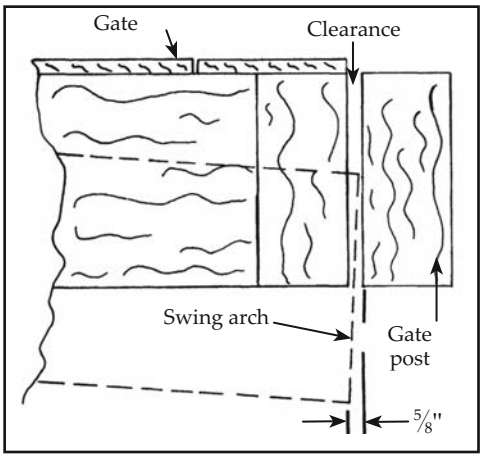

Figure 3-30
Allow for the gate to swing

walk through should be at least 36 inches wide, although 40 inches is better. A vehicle entry gate should be a minimum of 7 feet wide. Trucks and RVs require an opening of 8 to 10 feet. Farm equipment and mobile homes need 10 to 25 feet.

When choosing gate locations, think about the route people would take if there was no fence at all. I've seen some pretty thoughtless arrangements. In one case, the fence started beside the driveway but the gate was in the middle of the yard. When you drove up, you had to walk an extra 30 feet from the driveway to the gate. It's usually better to curve the sidewalk from the drive to the main entry, putting the entry gate near the garage or carport. Another solution would be to install two gates, one at the front of the house, the other on the driveway side.

Determine which direction the gate will swing before you install the hardware. Most gates open toward the enclosed area, but this isn't always practical; there may be plants or buildings in the gate's swing path. Or you may want the gate to swing back against a wall or an adjoining fence. On sloping ground, swing the gate downhill. If there aren't any physical limitations, abide by the owner's preference. Find out whether the owner is right- or left-handed, and whether he's likely to be carrying things when he goes in or out. Right-handed people usually carry things in their left hand, with their right hand free to open a latch or turn a knob.

It's a good idea to leave a 3- to 6-inch space under a gate. That allows for sweeping or hosing under the gate without opening it. It also permits a little sagging or warping before the gate binds. If the enclosed area is intended to contain animals or children, however, a large gap is no good. If they can get their heads through the gap, they can get their bodies through, too.

Plan a Gate on Paper First

It's certainly worth the time and effort to draw up a plan for a gate before you build it. The first thing to figure out is how wide the opening will be. Let's say you plan to use S4S 2 x 4s for the posts. The two posts are 1½ inches thick, for a total of 3 inches. You have to allow some space between the posts and the gate for lumber expansion and the *swing arch*. The swing arch is the amount of clearance you need between the edge of the gate and the post when the gate swings on its hinges. Guidelines here are ¼ inch on the hinge side, and ⅝ inch on the latch side, a total of ⅞ inch. Figure 3-30 illustrates the swing arch allowance on the latch side.

If you plan to use five 1 x 8 KD fir face boards (7½ inches finished width) for this gate, allowing ⅛-inch gaps between face boards for expansion, that comes to 38 (7½ × 5 boards, plus ⅛ × four gaps) total inches. Add that to the 3 inches for the posts and the ⅞ inch for the hinge and latch post clearance, and you get 41⅞ inches for the total opening. You can round that off to 42 inches if you like.

This measurement, 42 inches, is the opening between the two end fence posts. You'll bolt the gate posts to the fence posts. I don't recommend using fence posts as gate posts. Fence posts aren't heavy enough, and gate posts get a lot more stress. Plus, it's easier to replace a bolted-on gate post than a fence post that's buried or cemented into the ground. If you were to decide to use the fence posts for gate posts, you'd need to deduct 3 inches for the extra 2 x 4s, reducing the opening total to 39 inches.

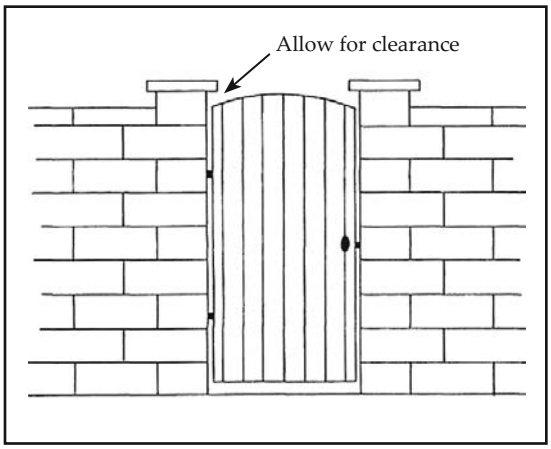

Figure 3-31
Gate must swing clear of overhanging cap blocks

Gate Height

For a wooden fence, make the gate posts one inch shorter than the fence posts. Bolt the two together, beginning at the top, with the two posts flush with each other. The gate posts will end one inch above ground level.

How high should the gate be? If you want adults to see over it, make it no higher than 60 inches. Otherwise, make the top of the gate even with, or just slightly lower than, the height of the fence.

Even if the fence is over 8 feet high, the gate shouldn't be more than 84 inches high. Fill the space above the gate with a header like the space over a doorway. Put the header at least 84 inches above the ground. You can also build a decorative arch or filler in the space above the gate.

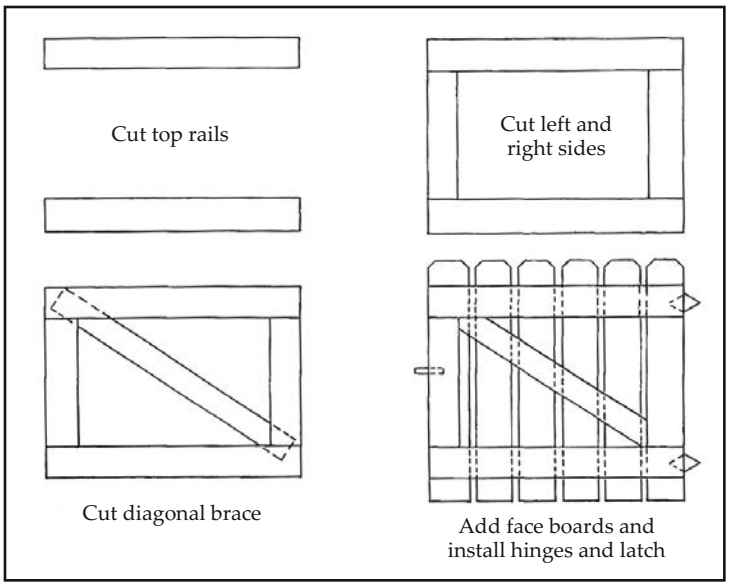

Figure 3-32
Z-frame gate

You may be asked to install a wood gate in a block wall where the end posts are pilasters that are taller than the wall. The top of the gate should be even with the top pilaster block. As Figure 3-31 illustrates, cap blocks overhang the pilaster or wall blocks, so the gate must be low enough to clear this overhang. A half inch is enough.

Gate Bracing

To make a sturdy gate, use a diagonal cross support in a Z-frame design for the main structural members, as shown in Figure 3-32. Cut the top rail of the box or Z to accommodate the face boards and the spaces between them. Continuing with the earlier example, you'd need to make the 2 x 4s 38 inches

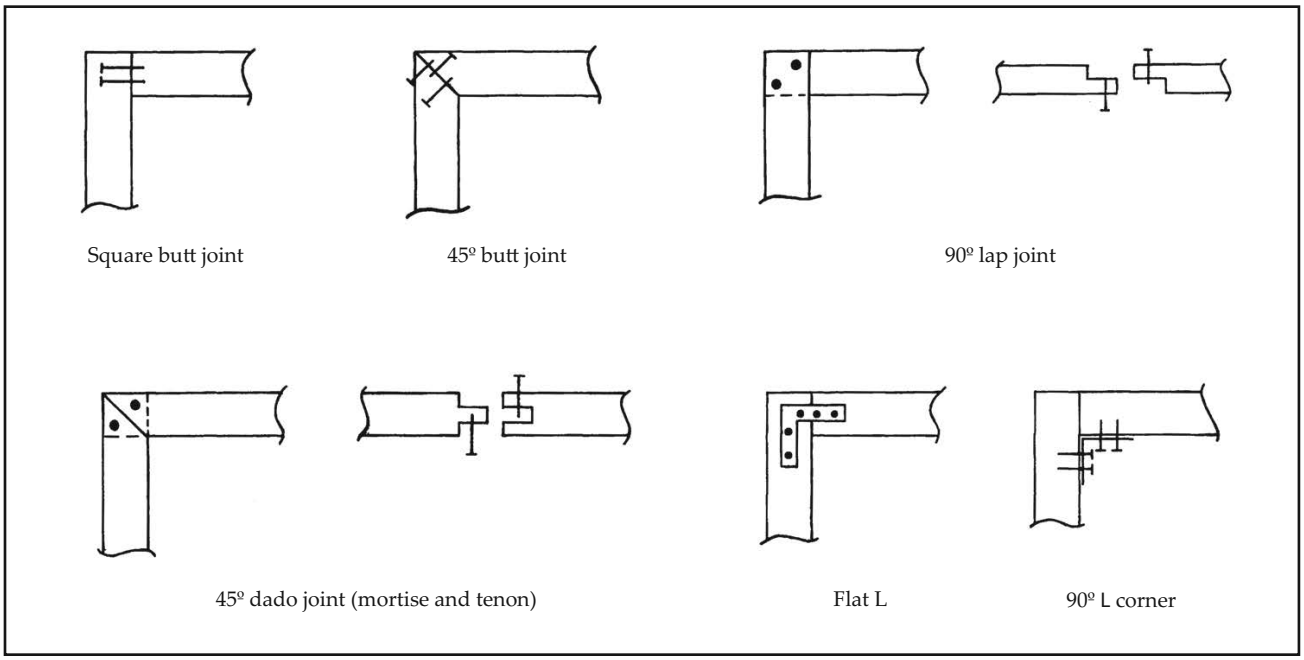

Figure 3-33
Gate frame joints

long. The rails will be just slightly shorter than the finished width of the gate. Let the face boards overhang the frame by 1/16 inch on each side.

Next, decide how far apart to place the top and bottom rails, and cut the vertical boards for the frame. Attach them to the rails using any of the methods shown in Figure 3-33. If the fence is a wood rail fence, line up the gate rails with the fence rails. The result will be a clean-looking gate and fence.

When you're building a gate with a patterned top, put the top rail at least 2 inches below the lowest part of the design. Make the top and bottom rails correspond to the hinge locations. That way you'll have something solid to screw the hinges into.

The diagonal brace on a wood gate can be one of two types: a 2 x 4 wood brace, or a metal rod or wire. There's a difference in the way these work, and you install them differently.

Wood Braces

Wood braces are cheaper, but they're a little trickier to install. They have to be cut precisely. If you're off by as little as 1/8 inch, the brace won't work. Also, unlike metal braces, there's no way to adjust a wooden brace after you've installed it.

Install a wood brace with its lower end at the *hinge* post. The top end goes at the *latch* side of the gate. That way, the weight of the outer edge of the gate rests on the brace, which in turn pushes against the hinge and the hinge post.

Cut and position the diagonal brace so the miter cuts contact the vertical frame board at the hinge side and the top rail of the gate at the latch side.

Here's how to cut the angles on the braces:

1. Build the box frame and square it.
2. Lay the lumber for the brace *under* the frame. Position it so the miter cut will contact the top rail and the hinge post. Mark the intersection angles on the cross brace.
3. Make your cuts outside of your marks — that is, toward the ends of the boards.
4. Fit the brace in place and make any fine adjustments with a wood rasp or power sander.
5. When you're sure you have the proper fit, fasten the brace in place with flathead wood screws and reinforcing plates.

Wire or Rod Braces

A wire or rod brace is easy to install. Many hardware stores carry kits that include eye bolts, turnbuckle, wire, and wire clamps. Some carry truss rod kits. If you can't find a kit for your gate, a sharp salesperson can probably make one up for you from items he has on the shelf. Install wire or rod braces in the opposite direction from the wood brace — with the upper end at the hinge post and the lower end at the latch post. That way, any sag in the gate is stiffened by tension of the rod or wire which pulls against the upper hinge and hinge post.

Use L-brackets to hold threaded rod in place. Pre-drill the brackets to accept the rod, then use nuts and washers to fasten the rod on both sides of the brackets.

Threaded eye bolts secure the wire braces to the gate frame. Pass the wire through the eye, wrap it back around itself, and crimp it in place with a sleeve and crimping tool or a pair of pliers.

Keep in mind that these bracing techniques won't work if they're installed backwards. Figure 3-34 illustrates the correct brace configurations for both wood and metal gate braces.

Metal frame gates have their own special bracing kits. The difference is in the way the wire or truss rod attaches to the gate. The typical metal frame gate bracing kit contains corner gussets that you weld into place. Then you fasten the wire or rod to the gussets.

Build Gates to Last

There are some simple ways to make *your* gates last years longer than the average. If you want to earn a reputation for high quality workmanship, make a habit of doing the things I describe in the following segment.

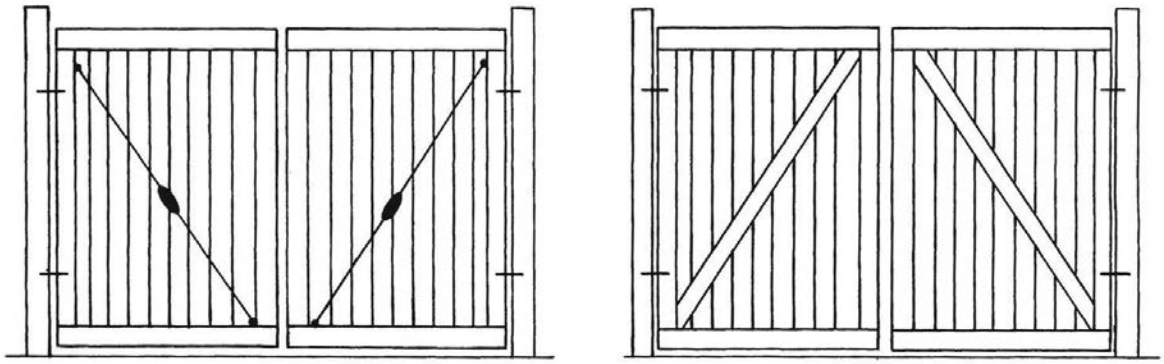

Wire brace works by tension.
Use turnbuckles for adjustment.

Wood brace works by compression.
No adjustment is possible.

Figure 3-34
You attach wood and metal gate braces differently

If you're installing a gate on a block wall that you didn't build, be sure the block has been filled with grout. If it's hollow, your anchor or bolt has nothing to grip. Remove the cap block and pour grout into the wall cavity. Then the post will stay in place, and the entire block, post and gate area will be stronger.

Use metal plates and brackets to reinforce joints where the rails and diagonals or verticals meet. These come in flat L- and T-shapes and as 45- and 90-degree angle braces. They're inexpensive and effective. You can hide the metal plates by putting them on the face board side of the framing boards before you install the face boards. You'll have to chisel indentations for the plates into the 2 x 4s so the face boards will lay flush. Avoid putting metal where you want to install hinges or latches, or you'll waste some time drilling through it.

Clear-coat or paint all lumber and metal where two or more pieces touch each other — *before* you assemble them. Do this even to the cut ends that will be hidden after assembly. This prevents water and most insects from getting into the wood. It also prevents rust on the metal parts. Don't coat all sides of the lumber right away, however. You need to leave some bare wood for moisture to escape if your lumber isn't entirely dry.

In addition to the fasteners, use construction glue to join pieces of lumber together. Use screws to attach the face boards to the frame — brass screws if the face lumber is redwood or cedar. Phillips-head wood screws work best. Pre-drill the holes using a drill size three quarters the size of the screw shaft. Use two screws for each place the face board touches the frame. Put screws every 6 to 8 inches in the boards on the outside edge of the gate if you use a box frame.

Run a bead of exterior paintable silicon caulk along the top joint where the face boards contact the rails. This will prevent water from getting in between

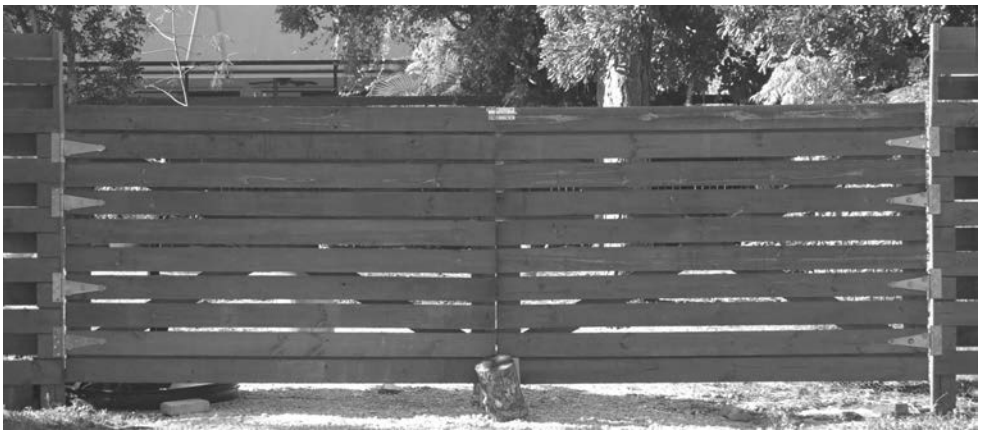

Figure 3-35
T-strap hinges

the face boards and the rails and rotting the lumber. Don't caulk the bottom joints: Leave these open to let moisture escape. You can get clear, colored, or paintable silicon caulk at most lumber, paint, and hardware stores.

It's good practice to frequently check the frame for squareness during the construction process. You'll avoid having to make adjustments or compromises in quality and esthetics down the road.

Installing Hinges on Wooden Gates

Most gate failures happen because of inadequate hinges. Hinges and latches come in kits that contain screws, but they're usually too short to be much good. Buy screws long enough to go through the hinge or latch metal, through the face lumber and at least one-third of the way into the frame. Buy quality, heavy-duty hardware intended to be used outdoors. It will pay for itself in the long run.

There are many different kinds of hinges and latches. Make sure you get the right ones for the job. *Semi-concealed* hinges can only open outward, but you can mount *plane pin* and *H-hinges* so the gate will open either in or out.

Attach *strap* hinges with bolts or lag screws. Conventional strap hinges require a post that's at least 3 to 4 inches wide. *T-strap* hinges, like the ones supporting the gate in Figure 3-35, require less space and will fit on the narrow side of a 2 x 4 gate post.

When you're ready to install hinges, put a spacer board under the gate to support it at the height you want it, and level everything. You should already have checked the gate posts to be sure they're plumb. Use screws or bolts to install the hinges. Leave about ¼-inch clearance between the gate and the hinge post. When you close the gate, there should be ⅝-inch clearance between the gate and the latch post. Install the latch and lock, if you're using one.

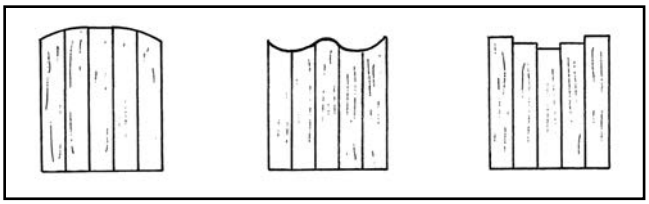

Figure 3-36
Add a little style to a gate

Use three hinges on gates that are more than 5 feet high and over 3 feet wide. Install the top and bottom hinges first, followed by the center hinge. Careful alignment is a must to prevent binding. Use a level or insert spacers between the gate and posts to make sure the gate is plumb and not sagging when you position the hinges. Check to make sure the gate swings properly before you install the center hinge.

Most hinges can swing in an arc of about 270 degrees, or ¾ of a circle. So you may have to install a stop to keep the gate from swinging past the closed position, which puts unwanted stress on the hinges and latch. Close the gate and set the latch side flush with the front of the gate post. On the latch post, mark a line where the back of the gate meets the post. Nail a full-length stop to the latch post. The stop can be finished trim lumber, quarter-round, or a 1 x 2. Some contractors extend a fence board beyond the post for use as a gate stop.

You might also need a stop for the open position. One option is to install a stop in the ground behind the gate — such as a pipe, 2 x 4, block or brick. Other stop options include a spring, door closer or hinge pin.

Don't be in too much of a hurry to finish a gate. Sometimes you'll be under pressure to finish the job quickly, but try to allow some extra time for everything to settle and dry out. Wood is an unstable building material. It shrinks. It expands. It does other things that can mess up an otherwise good job. If possible, wait a few days or a week before you install the latch or paint a new gate.

If you install the latch immediately after the gate has been installed, there's a better than average chance that the gate will sag slightly and the latch won't fasten properly after only a few days. If you wait a week, however, the hinges will have a chance to wear in and loosen a bit. At that point, you'll be able to install the latch where it really belongs.

Decorative Top Patterns

Now's the time to cut the top pattern in the gate. There are a number of gate top patterns to go with, but help your customer to choose one that's not *too* elaborate. See Figure 3-36 for a few ideas. You might think it would be better to cut the pattern while the gate is on the ground, and it probably is easier that way. But things do go wrong. Once the gate is hung, you can draw and cut the top pattern so it *looks* right, even if the gate sags a bit, or isn't perfectly symmetrical.

Most designs are cut so each half is a mirror image of the other half. Use a piece of thin cardboard the width of the gate for a pattern. Fold the cardboard in half and draw one half of the design on it. Then cut the cardboard according to your drawing and unfold it. That way you're sure both halves of the design are identical.

Use the cardboard pattern as a template to mark the cutting line on the gate. When you trace the cut line onto the face boards of the gate, don't put it too close to the top edge of the boards. Leave at least ½ inch to an inch. That way, you'll have a firm base for your saw to rest on. Be sure the top rail of the gate doesn't interfere with the lowest point in your pattern. Make your adjustments on the cardboard. You can do it easily then. Once you start cutting the wood, it becomes a problem.

After you cut the design, lightly sand the cut edge to remove splinters. Then paint or clear-coat the cut edge. Check the operation of the hardware and put a few drops of oil on the hinges and latch parts. The wood gate is finished.

Chapter 4

Block & Brick Walls

MOST OF THIS CHAPTER is about concrete block, or CMU (concrete masonry units). It's a nearly perfect building material: relatively cheap (compared to formed concrete), durable, comes in a variety of colors and styles, and adapts easily to build walls of nearly any shape or size.

But building with brick and block requires more than a little knowledge and skill. This chapter will help you along those lines. Also be aware that, in some states, you must have a contractor's license to do this kind of work.

Block Materials and Properties

Manufacturers make block from many different materials — the most common of which is *concrete*. But block made from mud and straw, cinders or clay is also available, sold under the name *adobe.*

In the 1800s, adobe block was made by hand in small wooden presses, one at a time. Today, concrete block is made by machine to precise specifications. We use block to build homes, barns, office buildings, factories and privacy walls. If you learn the correct techniques for building block walls, you'll open up many other opportunities for yourself in construction. Concrete block is used everywhere.

Dimensions

For the rest of this chapter I'll use the term *block* to describe those blocks classified as concrete masonry. These can be either solid blocks, hollow core

Rows	Height in inches	Height in feet	Wall length					
			4′	8′	12′	16′	20′	24′
1	8	0.67	3	6	9	12	15	18
2	16	1.33	6	12	18	24	30	36
3	24	2.00	9	18	27	36	45	54
4	32	2.67	12	24	36	48	60	72
5	40	3.33	15	30	45	60	75	90
6	48	4.00	18	36	54	72	90	108
7	56	4.67	21	42	63	84	105	126
8	64	5.33	24	48	72	96	120	144
9	72	6.00	27	54	81	108	135	162
10	80	6.67	30	60	90	120	150	180
11	88	7.33	33	66	99	132	165	198
12	96	8.00	36	72	108	144	180	216
13	104	8.67	39	78	117	156	195	234
14	112	9.33	42	84	126	168	210	252
15	120	10.00	45	90	135	180	225	270
16	128	10.67	48	96	144	192	240	288
17	136	11.33	51	102	153	204	255	306
18	144	12.00	54	108	162	216	270	324

Figure 4-1
Number of standard block required

blocks, split-faced blocks, decorative blocks, or accessory blocks. The basic unit size, 8 x 8 x 16 inches, is called *regular* (or *standard*) block. Block measurements are always given with the width first, then the height, then the length. It's important to remember that. A 4 x 8 x 16 block is *not* the same as an 8 x 4 x 16 block.

Blocks typically come in 4-, 6-, 8-, 10- and 12-inch widths; 4- and 8-inch heights; and 8-, 12- and 16-inch lengths. These are *nominal* measurements. Actual dimensions are ⅜ inch smaller to allow for the mortar joint. The block size plus the mortar joint equals the finished size.

Note that nominal lengths are multiples of four inches. That way you can use an even quantity of block for walls of any length divisible by four. Figure 4-1 shows you how many regular blocks you need to build walls of six different lengths. You can also use the data in the chart to determine the block requirement for longer walls. For example, according to the chart, a 12-foot-long wall 6 feet high will require 81 standard blocks. If you're building a 36-foot-long wall, it will require three times the number of blocks in a 12-foot-long wall (since 36 ÷ 12 = 3). That's three times 81, which equals 243 blocks (excluding waste). Allow for 8 percent waste when you estimate block quantities.

Figure 4-2
Horizontal steel in lintel block

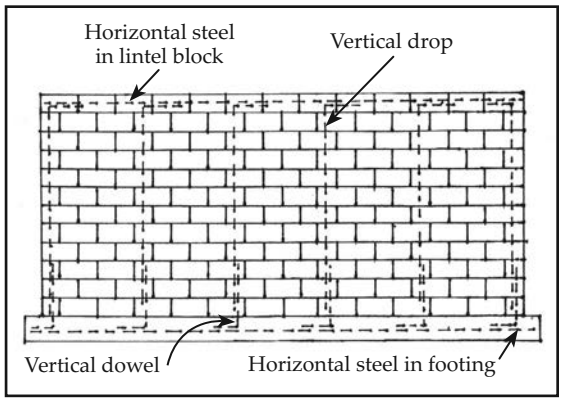

Figure 4-3
Reinforcing in a CMU wall

Configurations and Uses

Blocks come in special shapes for special applications. *Regular* (or standard) block is the type you'll use the most; these are also called *stretcher* blocks. Most block types are partially hollow, with cavities called *cores.* Some blocks have two cores, and others have three.

Using regular 16-inch stretchers allows you to stagger the block layers so the joints don't overlap each other. This makes the wall stronger.

Half (or *cube*) blocks are 8 x 8 x 8. Half blocks are used most often at the jambs of openings, or at pilasters or expansion joints in order to allow staggered joints throughout the wall.

Partition blocks are 4 or 6 inches wide. Because they're narrow, you can use them to partition off an area using a minimum of floor space for the wall. Their small core spaces make partition blocks difficult to reinforce, so you shouldn't use them for loadbearing walls or where there's the possibility of heavy lateral loads.

Bond beam block *(lintel*, *channel* or *U-block)* has a channel molded into it that accepts horizontal metal reinforcing — usually one or two No. 5 reinforcing bars. Lintel block is most commonly used in the top course of a wall to provide extra strength and stability, as shown in Figure 4-2. Some walls require several courses of lintel block spaced equidistant between the bottom and top of the wall. You can fill them with concrete to give a wall additional strength.

The horizontal reinforcing steel in the lintel block is wired to L-shaped vertical steel bars (or *drops*) that extend down the wall, as illustrated in Figure 4-3. The drops are then tied to steel dowels installed in the concrete foundation. To access the tying location, you can break regular block open at the core, or install inspection block at the proper locations along the bottom of the wall.

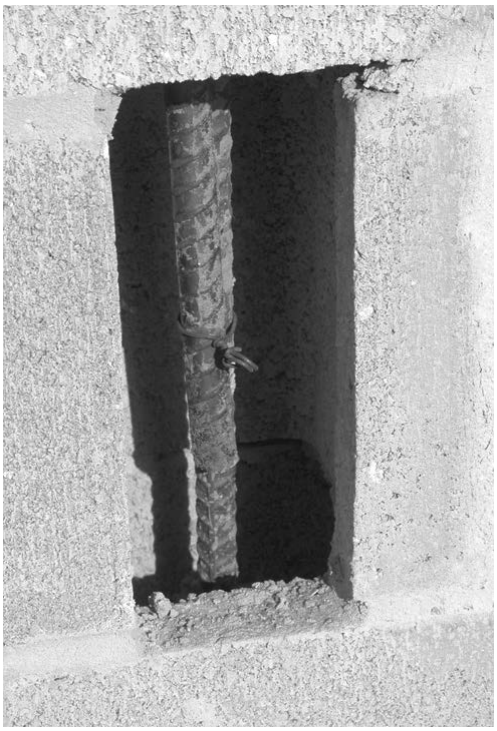

Figure 4-4
Vertical rebar tied to dowels

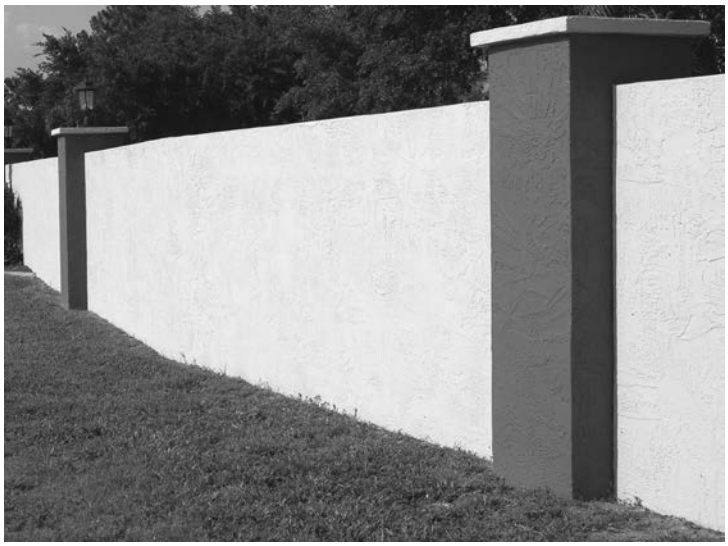

Figure 4-5
CMU privacy wall with pilasters

Block and concrete expands and contracts with changes in temperature. It's good practice to include expansion joints every 16 feet in a long wall. The expansion joints, commonly plastic strips or 1 x 6 redwood, prevent the wall from cracking or breaking apart.

Figure 4-4 shows the drop-dowel connection, as viewed through an inspection hole in the block.

After all steel reinforcing is tied together and passes inspection, cover the inspection holes with plywood scabs before pumping concrete into the lintel block and the cores housing the drops. It's not always necessary to grout every core cavity: To prevent cores from being filled, install thin metal *cavity caps* over the cells. After all scabs and cavity caps are in place, fill the wall with pump mix concrete *(grout)*. Grout is concrete with smaller aggregate, which allows it to flow into small cavities.

Most of the walls you'll build will be solid privacy walls. Figure 4-5 shows how you can add large *pilaster (column)* blocks to make a wall more attractive. Pilaster block is available in 12 x 8 x 12, 16 x 8 x 16, 24 x 8 x 24 and other round or decorative sizes. You can join common block to simulate pilaster block, if you prefer. For example: build 16 x 8 x 16 columns by using two regular blocks per course. Similarly, build 24 x 8 x 24 columns by combining regular blocks and half blocks, as illustrated in Figure 4-6.

If you're building a wall to filter sunlight without completely obstructing the view, use *screen* blocks. They're molded with the cores running through the face sides, and come in many different designs and sizes. You can use them as ornamental fillers, as a decorative top layer, or to build an entire wall.

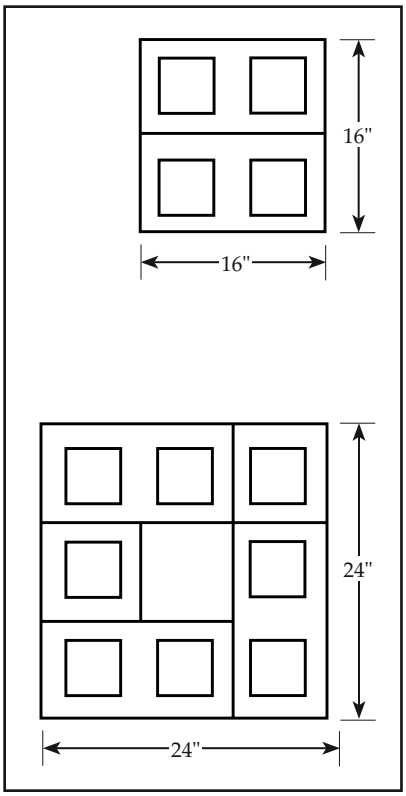

Figure 4-6
CMU pilasters using combinations of block

Figure 4-7
Scored block wall

For those people who object to the cold, commercial look of a regular block wall, there are *scored* blocks. See Figure 4-7. They have vertical grooves or scores in one face to add variety to the finished wall. They're available with single or multiple grooves that give the appearance of bricks stacked on end.

Split-faced is another alternative block style. It's basically oversized block that's been chopped or split, giving one side or face a rough-textured, more natural look. You can use split-faced block for decorative inserts in a plain wall, or you can build an entire wall out of it.

Reinforcement

The following information will be of particular interest to those of you planning to qualify for your contractor's license. The test will probably cover the types and uses of rebar, mortar, and concrete.

Rebar

Steel rebar is sized in ⅛-inch increments. The raised ridges around the rebar's diameter bond or lock the bar in place in the concrete. The smallest size is No. 3 rebar, which is ⅜ inch in diameter. The largest is No. 18, and measures 18⅜ (or 2¼) inches in diameter. The larger sizes (No. 14 to No. 18) are used for heavy commercial work, but most engineers will specify No. 4 or No. 5 bars for the kind of work we're discussing.

Rebar is also graded by a *yield* strength number, which indicates the minimum amount of pulling force (in thousands of pounds per square inch, or *ksi*) it can withstand before starting to deform. Standard grades range from 40 through 75, depending on the carbon content. Grade 60 is what you'll normally use in masonry walls and concrete footings.

Block walls and foundations both use rebar. For reinforcement, insert L-shaped rebar dowels vertically into the foundation when you pour it. These bars stick up through the block cores by about 36 inches. After the horizontal bars in the lintel block and the vertical drops are tied, fill the reinforced cores and the lintel block channels with grout or pump mix. This ties the wall and foundation together. Vertical rebar should be cut so that it will be 4 inches below the height of the top course of the wall.

You'll also put horizontal rebar in the foundation. The wall or foundation may eventually crack, but the rebar will prevent total failure. No. 5 rebar satisfies code requirements for walls from 4 to 6 feet high. The combination of block, grout, and rebar produces a wall that's flexible, yet very strong.

Rebar Failure

In the 1980s there were several bridge failures in the northeastern United States. The cause was traced to the rebar. In winter, bridges were salted to melt the ice. The salt dissolved in the melting ice and soaked into the concrete. When it soaked in enough to reach the rebar, it reacted with the steel and formed a gas. The gas expanded the concrete and fractured it badly, causing the bridges to fail.

One way to avoid this problem is to be sure there's at least a 3-inch cover of concrete between the rebar and the outside elements. Another solution is to use rebar that's epoxy coated. I'm not suggesting you paint all the rebar you use. But if you're building a wall that will be exposed to salt water for long periods of time, then I recommend painted or epoxy-coated rebar. Epoxy-coated rebar needs to be handled with care — nicks or cuts in the coating will cause it to lose its corrosion protection benefits. Re-coat any damaged portions according to the manufacturer's instructions before you use them.

Working with Rebar

Rebar is usually manufactured in 60-foot lengths but sold in 20-foot lengths. You can cut rebar with a hacksaw, but it'll take you a while. A cutting tool designed specifically for the purpose is faster and easier. Manual rebar cutters presently start at around $200, while electric- and battery-powered models can cost twice as much — or more.

Another handy tool is the rebar *bender*. Many rebar cutters also serve as benders. If you're going to fabricate L-shaped drops yourself, invest in one. You can also purchase prefabricated drops already bent and cut to the proper length.

Figure 4-8
Horizontal joint reinforcement

You can't just lay rebar pieces next to each other and pump the grout; you have to splice rebar together with steel *tie wire*. The local building code probably describes how the bars have to be spliced. Many codes require a certain amount of overlap when splicing two lengths of rebar together. An overlap of at least 40 times the diameter of the rebar itself isn't unusual. In other words, if you're using ¾-inch rebar, the bars must overlap by at least 30 inches (40 × ¾). Tie the overlapped bars at three points along the overlap. Each tie must be a minimum of three complete wraps of the tie wire. You'll need some heavy duty wire cutters to cut the tie wire.

Generally, vertical rebar is placed on 6-foot centers in a privacy wall. Again, check the building code, or hire a structural engineer to design the wall and footing. Since you place the vertical dowels in the foundation *before* you install any block, it's essential you measure carefully for the location. Don't just measure from one rebar to the next. If your measurements are off by even a fraction of an inch, you'll eventually wind up with a block that won't fit over the rebar — a sure way to ruin an otherwise productive day. Instead, measure the path of the wall from one corner to the next. Begin measuring from the position of the first dowel. To make sure each dowel is positioned within a core, install the first dowel just slightly less than 4 inches from the edge of the first block for two-core block, and 2.6 inches from the leading edge of three-core block.

Horizontal Ladder Reinforcing

In addition to the reinforcing steel, many designers require horizontal ladder reinforcing in horizontal joints between block courses at 16 inches on center, starting with the top of the second block course. See Figure 4-8. You can make metal form ties in the field from tie wire or 16 gauge metal strips. You can also buy ready-made snap ties from most block suppliers. These act as spacers to keep the forms from separating when you pour the concrete. You'll find that because of the savings in labor costs, snap ties are the best kind of ties to use.

Mortar

You use *mortar* to bond blocks together and in place. Mortar is a mixture of sand, lime, water and portland cement. *Type S* mortar is made from two parts portland cement, one part hydrated lime and nine parts sand. Its combination of high compressive (1,800 psi) and tensile strength is a good defense

against high winds, soil movement and earthquakes. *Type M* mortar is made with three parts portland cement, one part hydrated lime and 12 parts washed sand. High compressive strength (2,500 psi) makes Type M mortar good for structural walls and masonry below grade.

In this discussion, a *part* can be anything you want it to be as long as you use the same measure for each ingredient. The most popular measure is a *bag*, since most materials are packaged by the bag. In the recipes above, if you use bag measurements, you'll have about 3 cubic feet of mortar. Depending on block width, that's enough to cement 30 to 50 blocks, including mortar waste. Use 10 percent waste when you estimate the amount of mortar you'll need.

"Don't add old mortar to a new mortar batch. The two batches won't mix together properly."

When you add water to the mix, be sure all the dry ingredients are well mixed first. Then add the water slowly, mixing all the while. The final mix should be uniform in color and texture, free of dry material and lumps.

To test for the proper water content in the mix, let it stand for about 10 minutes. If the consistency stays the same, the water content is fine. If it's thick and heavy, add water. If it's very loose, let it sit a while longer until it's the consistency of cold butter.

Keep the mortar bunched together and covered. If it gets too stiff, add more water. If it gets lumpy, discard it and mix a new batch. Don't add old mortar to a new mortar batch. The two batches won't mix together properly. Mortar is usually good for up to 2½ hours after you mix it. Once it's older than that, discard it. If you find that your mortar is drying too quickly, it's probably because you have too much sand in the mix.

Some wall contractors add calcium chloride to their mortar to lower the freezing point of the mix. I don't recommend this. Even though it speeds up the cure time, it weakens the mortar. If you must use calcium chloride, add it in solution and don't exceed 2 percent by weight of the portland cement you're using. Two percent is the maximum allowed by most building codes.

Concrete Foundations

Every block wall should start with a sound, rebar-reinforced concrete foundation. The foundation carries the load of the wall, and keeps it upright and plumb.

The base of the foundation should be below the frost line — usually 18 to 24 inches below the surface. Check with the local building department, however, since the frost line is 36 to 72 inches below the surface in some places.

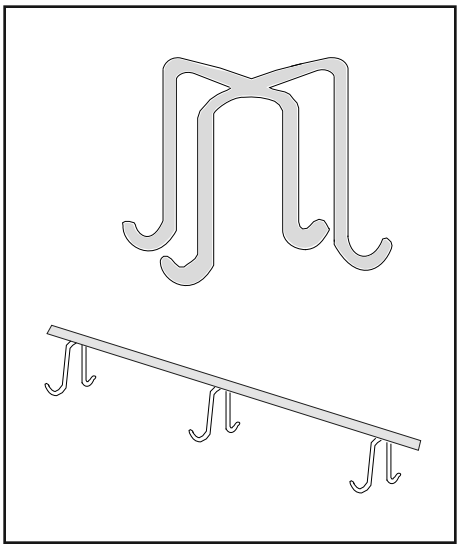

Figure 4-9
Individual and continuous chairs

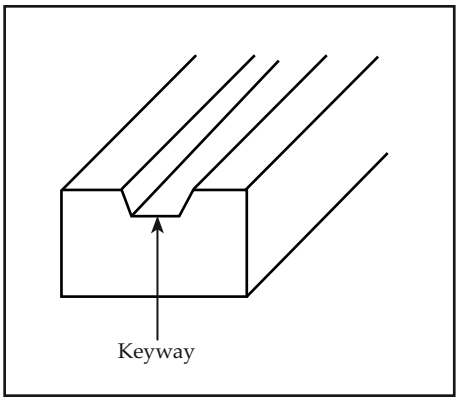

Figure 4-10
Keyway formed into concrete

Dig a trench the depth of the foundation and a minimum of two times wider than the block you're using. Later you'll position the block over the center of the trench. But keep in mind that, in most areas, you'll be required to have a structural engineer design the footing, as well as the wall.

After digging the trench, you'll install *chairs* to support the horizontal steel in the footing. Figure 4-9 shows two different chair styles. They should be about 3 inches high. The goal here is to keep the rebar off the bottom of the pour so it's enclosed by 3 inches of concrete. That prevents water from coming into contact with the rebar. You can also use bricks in lieu of chairs. Space them about 2 to 4 feet apart along the full length of the trench.

Depending on the vertical load (wall height), lay two or more lengths of rebar on top of the chairs, each one 3 inches in from the side of the trench. Then tie the vertical dowels to the horizontal rebar with tie wire. If you're using regular 2-core block, start by locating the position of the first block and measure in 4 inches from its outer end edge. That's the position of your first dowel. From there, use chalk or a wax pencil to mark the locations for the rest of the vertical rebar on the horizontal bars. Next, tie the horizontal rebar to all the dowels the full length of the trench.

Forming an indentation *(keyway strip)* along the top portion of each pour will give the next layer of concrete or grout a solid foothold. Keyways create a secure fit — much the same way as tongue-and-groove flooring. Fabricate the keyway using 2 x 4s with angled sides *(kerfs)* along the thin sides of the board, as shown in Figure 4-10. That will make it easier to remove the keyway form from the hardened concrete before you make the next pour.

Once the reinforcing steel has passed inspection, it's time to call the ready-mix truck and begin pouring. What kind of concrete are you going to ask for? Your supplier will know which mix is correct for your area and application, so just tell him what you're doing. If he can't help you, try a 1:2¾:4 mix. That means 1 part cement, 2¾ parts sand, and 4 parts gravel. Assuming you're using bags as the unit of measure, each batch of this mix will contain about six gallons of water. I'll talk more about water content later in this chapter.

The wall design may require you to grout the first two feet, or the first three courses, of block. That means you'll have to call for a concrete pump two separate times before the wall is completed.

Portland Cement

Portland cement is made from ground limestone, clay, shale, slag, and trace amounts of ore. It begins hardening when water is added. Drying tends to

stop the hardening process. Each bag contains 1 cubic foot of portland cement and weighs 94 pounds.

Concrete made from portland cement is graded according to mix and use. Here are the portland cement/concrete types:

- Type I is the most commonly used mix, and the one you'll probably use for wall foundations.
- Type II is best where the soil may contain sulfate. Use it for pouring foundations in warm weather. It doesn't heat up as much as the Type I while it cures *(hydrates)*.
- Type III is quick-setting cement you'd use when you want to remove concrete forms as soon as possible. It's also good in areas where you expect low or freezing temperatures during the cure period.
- Type IV is a low-heat-generating cement. It's recommended for pouring large masses of concrete, such as for a dike or sea wall. Use this where the sulfate concentration of the soil is higher than Type II conditions.
- Type V cement is used where there are very high concentrations of sulfates in the ground.

Type IA, IIA and IIIA are the same as Types I, II, and III, except they have an additive that generates and holds air bubbles within the concrete (air-entrainment concrete). These air bubbles provide expansion space in the formed mix, so water has room to expand in freezing weather. That helps keep the concrete from cracking.

One other type of portland cement you may be using is *pure white* portland cement. Unlike regular portland cement, pure white doesn't have traces of manganese and iron oxides. The oxides are what give regular cement its gray color. Pure white cement and washed white sand produce a bright white concrete. You'd also use pure white portland cement when you want to add color to the concrete. Colors are brighter if you use white cement and white sand. The added beauty comes at a price, though, which makes it impractical for use as a structural material.

Estimating Foundation Concrete

How much concrete should you order? Start by measuring the trench. When I figure concrete, I assume the trench to be 4 inches wider and 2 inches deeper than the drawings show, unless I'm using wood forms. Sand is cheaper than concrete, so many contractors use sand to level the bottom of the trench.

Let's say a trench is 40 feet long, 2 feet deep, 1 foot wide, formed on both sides, and the trench bottom has been leveled with sand. That comes to 80 (40 × 2 × 1) cubic feet. Since there are 27 cubic feet in a cubic yard, you can divide 80 by 27 to get the cubic yard equivalent. That comes to 2.96 in this example.

If you don't use forms or leveling sand, you might get by with 3 cubic yards, but I recommend you order 3½ cubic yards. The trench might vary in width and depth along its length, and there's bound to be some waste.

Some Useful Formulas

A cubic yard is a block *(cube)* that's 3 feet wide, 3 feet long, and 3 feet high. Calculating material requirements per cubic yard depends on aggregate size and the number of components in the mix. For a two-component mixture such as mortar, use the *Rule of 38*. Suppose you want to make a cubic yard of 1:3 mix mortar. This means you want one part cement to three parts of sand. How much cement and sand do you need? First, add the parts: 1 plus 3 equals 4. Then divide 38 (the "magic number" in the *Rule of 38*) by the sum of the parts (4) — which equals 9.5. Finally, you need to apply that number back to the original material ratio (1:3):

$$9.5 \times 1 = 9.5 \text{ cubic feet of cement}$$
$$9.5 \times 3 = 28.5 \text{ cubic feet of sand}$$

If you add the numbers together, it seems that you've got 38 cubic feet of material. But when you mix the fine cement particles with the coarser sand, the cement particles fill in the voids between the larger sand particles, so the total mix volume compacts somewhat. This mixture will actually yield one cubic yard of mortar, or concrete.

For a three-part mix of cement, sand, and aggregate (stone), use the *Rule of 41*. In this formula, the aggregate must be no larger than 1 inch in diameter. Suppose you want a 1:2:4 mix — 1 plus 2 plus 4 equals 7. Divide the "magic number", 41, by 7 to get 5.86. Then apply 5.86 back into the original ratio (1:2:4):

$$5.86 \times 1 = 5.86 \text{ cubic feet of cement}$$
$$5.86 \times 2 = 11.72 \text{ cubic feet of sand}$$
$$5.86 \times 4 = 23.44 \text{ cubic feet of aggregate}$$

Use the *Rule of 42* where the aggregate is between 1 inch and 2½ inches in diameter. The math is the same as the example above, except the "magic number" is 42. In this case, the 1:2:4 mix requires 6 cubic feet of cement, 12 cubic feet of sand, and 24 cubic feet of rock. (Aggregate of over 1 inch in diameter is considered rock.)

If you need to know the weight of the mix, multiply the number of cubic feet of each material by their respective weights per cubic foot:

- Cement weights 94 pounds per cubic foot
- Sand weights 105 pounds per cubic foot

- Aggregate weights 105 pounds per cubic foot
- Rock weights 100 pounds per cubic foot

So in the *Rule of 42* example above, the total weight comes to 4,224 pounds (not including the water content). That's 564 (6 × 94) pounds of cement, 1,260 (12 × 105) pounds of sand and 2,400 (24 × 100) pounds of rock.

How much water do you add? Water content should be based on the volume of *cement*, not the volume of the entire concrete mixture. A typical mix ranges between 3½ and 8 gallons of water for each bag of cement. In practice, a 3.5:1 ratio is very dry and not very workable, while an 8:1 ratio is very wet and results in weak concrete. A ratio of 6 gallons of water to each bag of cement will generally work best.

If you can work with a mix that has less water, do so. The concrete will be stronger and more resistant to weather.

A gallon of water weighs 8.8 pounds. Multiply the number of gallons by 8.8 and add it to the dry weight to find the total weight of the cubic yard of concrete described above. For example, if you're using 6 bags of cement and 6 gallons of water per bag, that's 36 total gallons. At 8.8 pounds per gallon, that comes to 316.8 pounds of water.

Pour and Level the Concrete

Use a steel trowel to level the concrete foundation. If the concrete mix is a little coarse, *tamp* it before you level it. Just pound the poured concrete with the end of a 2 x 4 to compact the concrete, removing trapped air and giving a more dense mix. On a large job, use a concrete vibrator.

Bleeding describes the water rising to the top of the concrete. The heavier aggregate, rock, and sand settle to the bottom as the water rises. You don't want this to happen. Tamping, vibrating and floating the concrete keeps the mixture from separating until it begins to cure. When water rises to the surface, concrete on the surface gets weak and will *craze*, *dust*, or *scale.* A crazed surface has hundreds of tiny cracks. A dusted surface is powdery. A scaled surface has thin, flat pieces chipping off of it.

If you're using wood forms instead of the trench wall to hold the concrete until it hardens, moisten the forms before you pour. Use water, lacquer or oil. You do this so the forms can be easily removed once the concrete has set. But don't use oil as a release agent if you plan to stucco, plaster or paint over the concrete; use water instead. Many finishes won't stick to concrete contaminated with oil.

When estimating the cost of a concrete footing, it's important to know whether the pour can be completed in one day. If the entire footing can't be poured in one day, you'll have to fabricate a *bulkhead* form where the pour stops. The bulkhead will need holes drilled through it to accommodate the horizontal reinforcing steel. For a multi-day pour, remember to factor in the additional time for vibrator and concrete pump rental.

Cure the Foundation

Concrete will *set up* or stiffen in just a few hours. But it takes several days for it to dry properly and harden. During that time, keep the concrete moist so *hydration* (hardening) can continue. There are several ways to do this:

1. cover the exposed concrete with wet burlap
2. mist-spray the concrete several times a day for several days
3. cover the concrete with plastic
4. spray the concrete with a commercial sealer *(curing compound)*

Why go to all this trouble? Because if concrete loses moisture too fast, it won't harden like it's supposed to. There may be weak or dry spots within the concrete that can eventually lead to complete failure of the foundation … and the wall. Concrete hardens slowly and doesn't reach acceptable optimum strength for up to 28 days. Let a poured foundation sit for at least a week before you begin to lay block on it. A month would be better, but that's usually not practical.

"Concrete hardens slowly and doesn't reach acceptable optimum strength for up to 28 days."

Weather and temperature play a part in the curing of the concrete. Ideally, the air temperature should be between 50 and 70 degrees F. If it's too warm, the water in the concrete will evaporate too fast. In warmer weather, be careful to keep the surface wet for the first six days after you pour. Cold weather will slow down curing. You might not be able to build on the concrete for up to two weeks.

Freezing temperatures will freeze the moisture in the mix and prevent proper curing. The concrete will be weak and porous. In freezing weather, cover the concrete with a waterproof insulating blanket or 10 to 12 inches of straw. Curing (hydration) produces heat within the concrete. Insulation will help hold in that heat and prevent freezing.

Laying the Block

Once the foundation is properly cured, it's time to lay the block. If possible, plan the wall so it's an even multiple of the size block you're using. For example, regular block with a ⅜-inch mortar joint is 16 inches long, so

you won't have to cut any block to fit if you build a 24-foot wall. You will if the wall is 23 feet or 25 feet.

Do yourself a favor and *dry lay* the first layer, leaving ⅜ inch between blocks. Dry lay means to put them in place without mortar. Use 8- x 8-inch pieces of ⅜-inch plywood as spacers. This way, you'll locate the two end corner blocks easily and precisely.

Now, carefully remove all but the two end blocks. Then stretch a line from the top of each corner block and hang a line level on it. If the corner blocks aren't level, shim the lower one until it's the proper height. Now mix just enough mortar to *bed* the two corner blocks. *Bedding* means to cover the foundation with enough mortar to coat the entire surface under the block being installed.

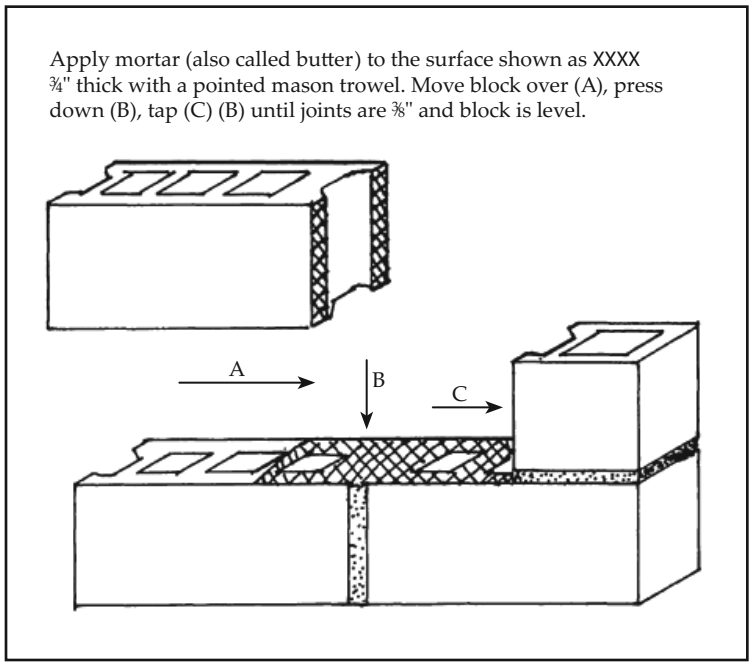

Figure 4-11
Laying the block

Make this mortar bed a little deeper than necessary to bring the block to the right height. Then tamp the corner block down and into place, checking it lengthwise, widthwise, and crosswise with a level. Do the same with the other corner; but be sure your line level is still level. Let the corner blocks set up for an hour or two.

Now you can lay the rest of the blocks on their bed of mortar. Use your level often, and in all directions. A mistake now can cause the entire wall to be out of plumb, not to mention losing your profits on the job. Give the *base,* or starter course, an hour to set up and then proceed with the next layer. Use a 6- or 9- inch mason's trowel to "butter" the top of each base block with ¾ to 1 inch of mortar. Also coat the end surface of the block you're putting on top. See Figure 4-11. When you tap the block into place, the mortar will compress to form the required ⅜-inch mortar joint. The excess will squeeze into the cavity, and outside the wall. Rake the outside to remove the excess and finish the joint, as described in the next section.

It isn't hard to lay block. An experienced mason can lay two to three blocks a minute if he has a helper to supply the block and fresh mortar. If you're just starting out, it will probably take you quite a bit longer than that. The key is to take your time and double check the position of every block as you go. It's real discouraging to discover that some of the blocks two courses back have to be replaced. Most masons check the wall height about every third course (2 or 4 feet). If the wall is too high, they'll use a slightly smaller horizontal joint in the next course or two. If it's too low, they'll use a slightly wider joint in the next course or two.

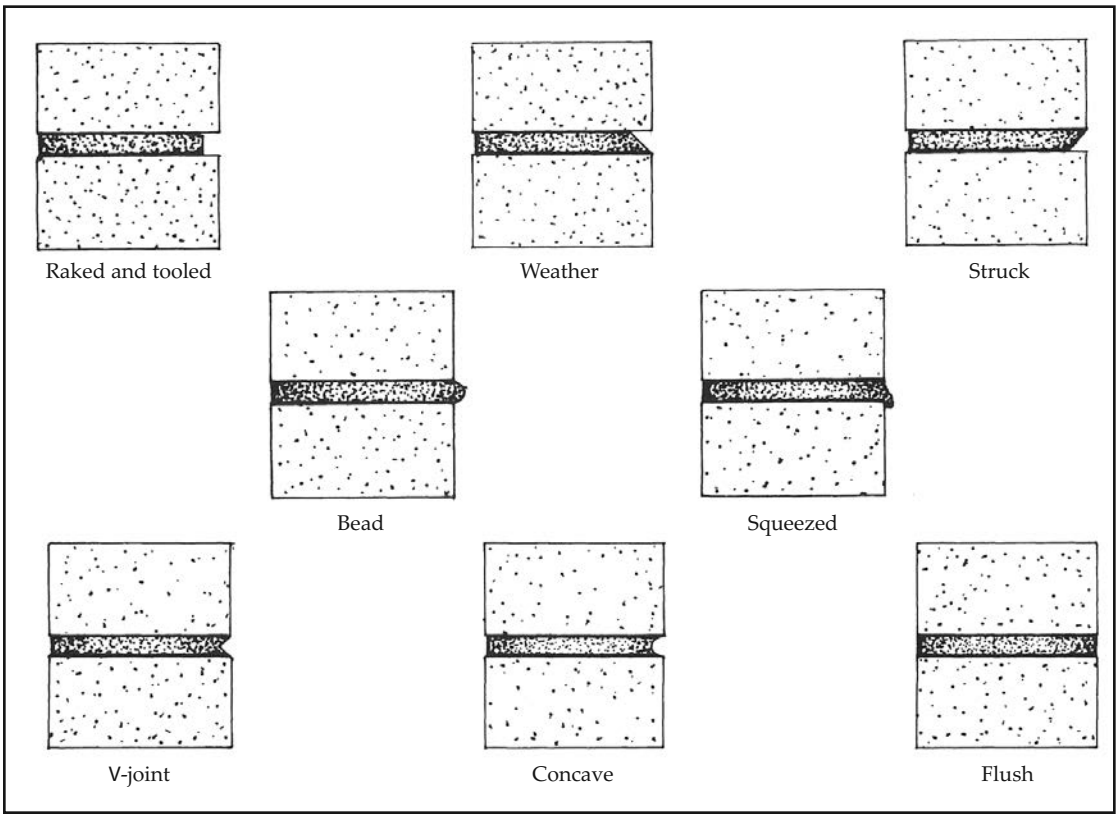

Figure 4-12
Joint finishes

Finishing the Mortar Joints

The finishing process is called *striking off,* or *raking* the joint. There are dozens of tools available for this purpose. In addition to removing excess mortar from between the blocks, raking compresses the mortar and makes its surface hard and more water resistant. The shape of the rake controls water runoff.

Figure 4-12 illustrates several joint finishes. I prefer to use concave or V-joints, although flush joints are the least expensive since they're formed by simply raking a trowel over the block. Regardless of which joint style you choose, keep a bucket of water nearby when you're finishing off joints so you can dip the tool to clean it off.

If you miss a section of a joint or have to repair an old joint, you'll do some *tuck pointing.* You tuck a small amount of mortar into the joint with a pointed trowel and then finish the repair by raking the joint.

Stacking the Block

For variety, consider different stacking patterns for block *courses*. I'll describe several patterns in the next section on brick work. Masonry block

work generally uses only two, called *stack bond* and *running bond.* Stack bond, as shown in Figure 4-13, has each course stacked in alignment with the course below it. In a wall like this, each block core should contain rebar and be pumped with grout. Stack bond is also a good choice when you're using open or screen blocks.

Running, or *stretcher*, bond is the most common stacking method — probably because it's not complicated and there's not much waste. This design, shown in Figure 4-14, uses all regular (or stringer) blocks, with each row offset by a half-block length over the one below it.

Figure 4-13
Stacked bond

Top Treatments

You can use a variety of top treatments to finish off a block wall. One option is to make a rounded crown of concrete. Another is to use cap blocks. A top row of screen block adds interest to a wall. Top treatments are both decorative and functional. The function is to keep dirt, trash, animals, insects, and water out of the wall.

Figure 4-14
Running, or common, bond

Allowing for Drainage

Water weighs just over 64 pounds per cubic foot, and it's a great solvent. Given enough time, anything will dissolve in it. The combination of hydrostatic pressure and the ability of water to dissolve concrete can eat through or topple a foundation or wall easily. The solution is to include a drainage system in any wall that has backfill against it. *Weep holes*, spaced 16 to 24 inches apart near the base of the wall, will help prevent water buildup. Open head joints — small gaps in the grout — are one way to allow water to seep through. Another weep hole option is to install ⅜- or ¼-inch plastic tubes diagonally through the mortar of the head joints.

It's important to keep the weep holes clear of mortar droppings and other debris. Backfilling the weep hole locations with drainage stone surrounded by filter fabric will help in that regard.

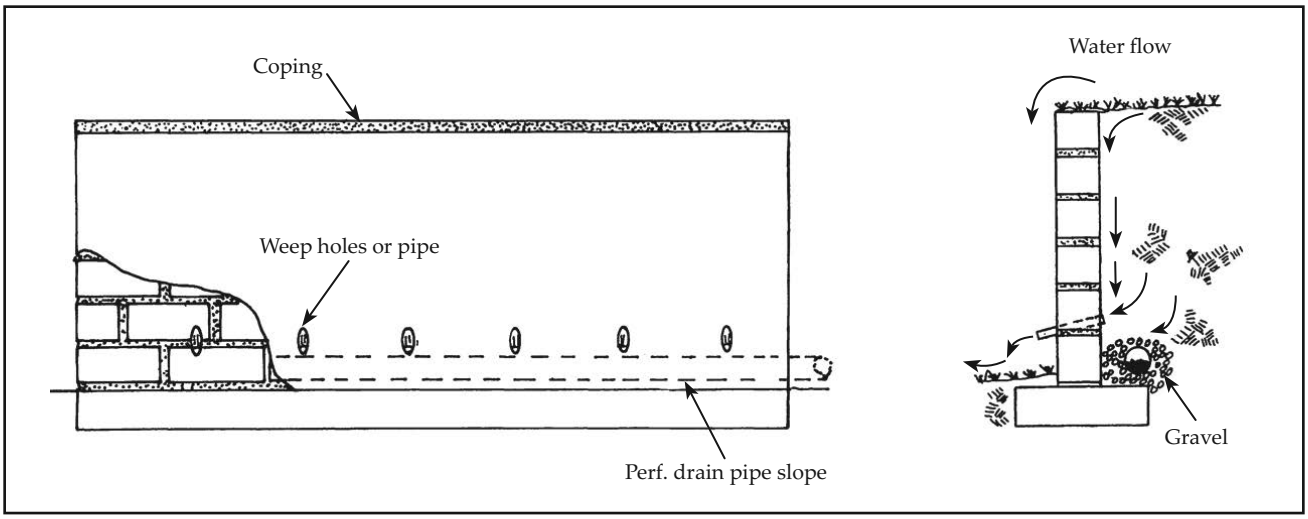

Figure 4-15
Wall drainage methods

Courtesy of Cercorp Initiatives, Inc.

Figure 4-16
Dry-stack CMU system

Perforated drain pipe, running along the base of the wall, is another drainage option. It can be connected to the home drainage system, or around or through the base of the wall. Again, you need to prevent the holes from clogging with soil and debris, so the pipe should be set in a bed of gravel. See Figure 4-15.

Dry-Stack Masonry Walls

Masonry is labor intensive work. It's no surprise that the industry is always looking for ways to minimize labor skill requirements and costs. Dry-stack mortarless masonry systems do just that. These masonry units typically interlock via special joints, clips or grooves that self-align and self-seat each block. The time savings can be substantial, with little or no sacrifice in strength or overall quality. Wall reinforcement, alignment and tensioning methods will vary by manufacturer. The system illustrated in Figure 4-16 uses threaded *tendons*, 4 feet on center, that are cast into anchor holes in the foundation. After all the courses are in place, the wall can be tensioned with hex nuts installed at the protruding end of the tendon. The only grout or rebar used in this particular system, except for the grout in the first course, is in the bond course at the top of the wall.

Brick Walls

Brick wall building is similar to concrete block wall building except for the materials. You still need a foundation, the building materials, some horizontal reinforcing *(brick ties)* to strengthen the wall, and mortar to hold it all together. The tools are also similar. The difference is in the size of the materials, the vocabulary, and the bond patterns.

Materials

Bricks are smaller than masonry blocks. They can be made from concrete, but are more likely made from clay. Clay brick is made from clay shaped into a block and then *fired* in a kiln or oven at high temperature. *Fire brick* is made from a special type of clay that resists the extreme heat in fireplaces, barbecues and chimneys. Since fire brick is expensive, you'd generally use it for a *liner,* to cover the surface exposed to flame; regular brick would be used for the shell.

Most brick is considered *solid masonry* because it doesn't have cores. Technically, solid masonry is any brick or block that has no cores or cores smaller than 25 percent of the surface area. If over 25 percent of the surface area is open, it's considered a hollow brick.

Dimensions

Brick names and dimensions vary, depending on the manufacturer. Keep in mind that actual size will be smaller than nominal size. This is because nominal sizes include a ⅜-inch mortar joint on the top and side. Economy brick is 4 x 4 x 8 inches nominal, and 3⅝ x 3⅝ x 7⅝ inches actual. Figure 4-17 lists typical sizes for other varieties of brick you may use.

Brick type	Nominal size			Actual size		
	H	W	L	H	W	L
American	2 5/8	4 1/8	7 3/8	2 1/4	3 3/4	8
English	3 3/8	4 7/8	9 3/8	3	4 1/2	9
Modular	4	4	8	3 5/8	3 5/8	7 5/8
Norman	3 1/8	4 3/8	12 3/8	2 3/4	4	12
Roman	1 7/8	4 3/8	12 3/8	1 1/2	4	12
Standard	2 7/8	4 1/4	8 5/8	2 1/2	3 7/8	8 1/4

Figure 4-17
Brick sizes

Brick Strength

The compressive strength of brick is greater than that of block. Brick starts around 3,000 psi and goes up to 20,000 psi. That's why brick will support vertical loads better than block. Compressive strength depends on the material used, the firing temperature and time, and the amount of water the brick absorbs. The harder and denser the brick, the less water it will absorb and the stronger it will be. Moisture absorption rates are an important consideration in cold weather, since brick loses loadbearing capacity due to the freeze-thaw cycle.

Appearance

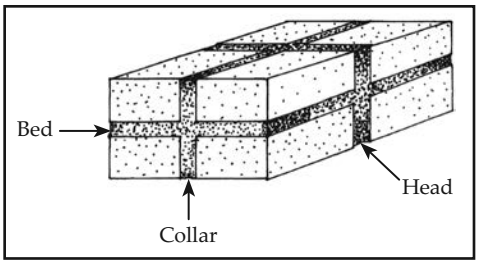

Figure 4-18
Masonry joints

Brick comes in many styles and colors: white, black, and all shades of red, purple, cream, tan, maroon, and gray. Previously-used brick that has been exposed to the weather for a long time has a unique surface glow that's desirable in some styles of architecture — colonial is one example. Some brick is made to look like used brick and may contain several color variations.

The brick *style* refers to the surface texture that's molded into the bricks. You can find them flat or smooth, or with sandmold, stipple, barks, matte-vertical, matte-horizontal, waterstruck, or rug textures.

The Bricklayer's Language

A brick's orientation determines the name used to describe that brick in the wall. The following descriptions apply to standard brick where there's a difference between the width and height:

- A *stretcher* is the same as block — the length and height show with the brick placed horizontally.
- A *soldier* also shows the length and height, but the brick is laid vertically. (The bricks stand in a row like soldiers.)
- A *sailor* is placed upright like a soldier, with length and *width* showing. If you lay a sailor on its side, it's called a *shiner.*
- A *header* shows just the end (height and width) of the brick, with the width horizontal.
- A rowlock (or *rolock*) is the same as a header with the height as the horizontal dimension. Rowlocks are usually used above archways as window sills, or to cap the top of the wall.
- A *wythe* refers to a single masonry unit of wall thickness. For example, an 8-inch-thick wall made from 4-inch-thick economy block is two wythes wide.
- The vertical joint between two bricks is called a *head joint.*
- The vertical joint between two *wythes* is a *collar joint.*
- A *bed joint* is the horizontal joint.

These last three joint types are illustrated on a portion of stretcher stack bond wall in Figure 4-18.

In addition to brick joints and orientation types, you should also familiarize yourself with cut brick terminology. Figure 4-19 shows some common brick cuts.

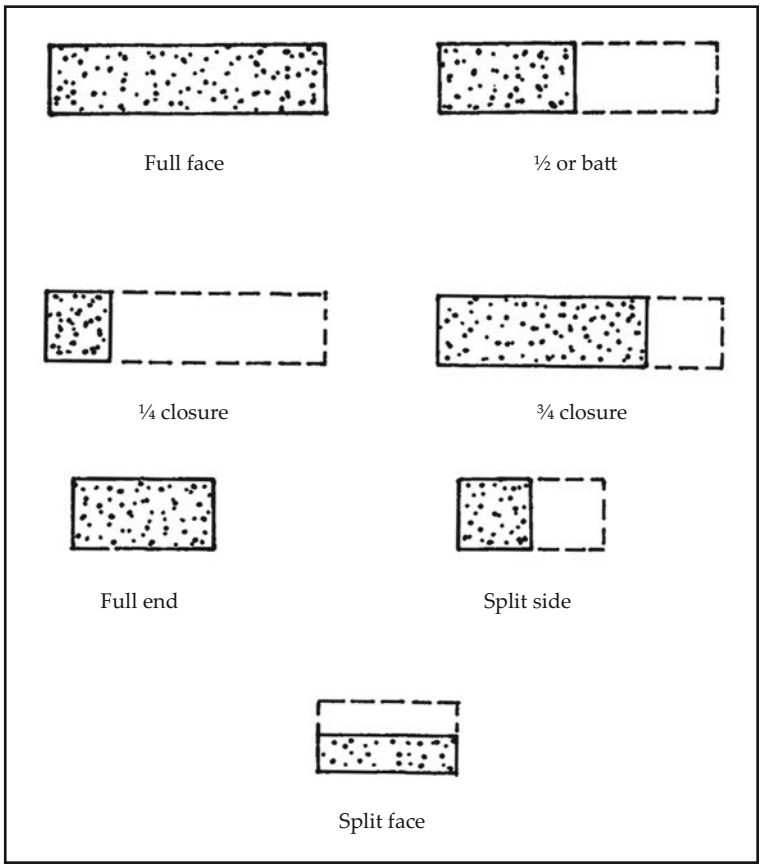

Figure 4-19
Names for cut bricks

Bond Patterns

In addition to the stack and running bond styles that I've already described in this chapter, there are countless bonding patterns to choose from; Figure 4-20 illustrates three of the most popular. The American bond is also called a common bond. Common bond walls can have full headers at every third, fifth or sixth course. Flemish, or Dutch, bond consists of alternating headers and stretchers within each row. English bond walls contain alternating rows of headers and stretchers.

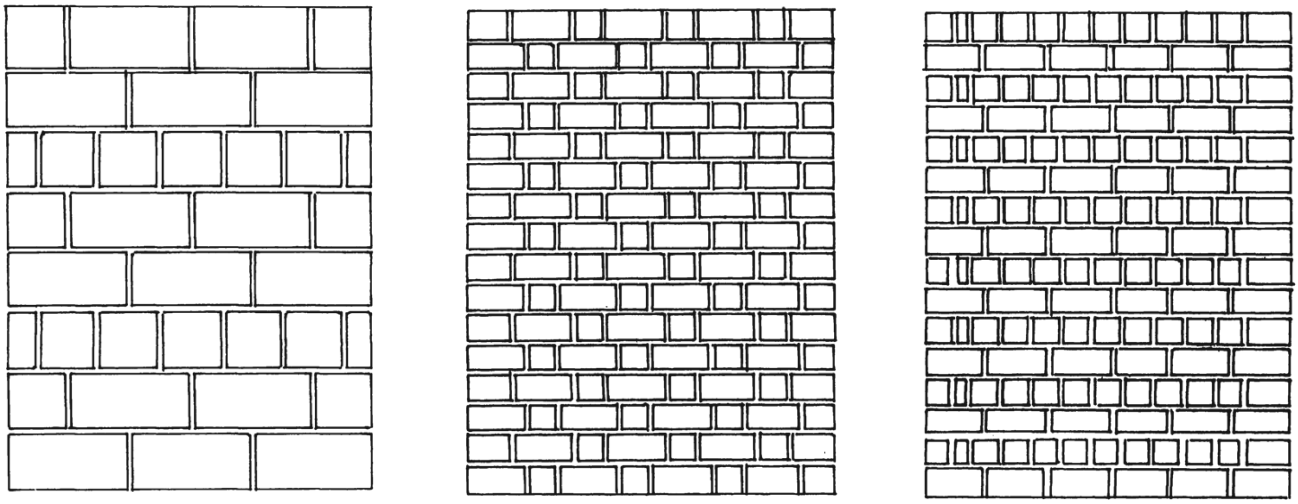

Figure 4-20
Bond patterns

Chapter 5

Chain Link & Wire Fences

IN THIS CHAPTER YOU'LL learn how to install chain link and wire fences. I'll cover the materials you'll use, construction techniques and some safety precautions.

Chain link and wire fences are two of the most widely used fences in the world. They're cost efficient, good for residential or commercial purposes, and can last 20 years or more. They permit air flow and an unobstructed view of scenery beyond the fence. Or, if you want to screen out unsightly surroundings, wood, metal or vinyl privacy slats can be installed in the fence fabric.

Chain Link

Chain link fence materials are available in several colors, including black, brown, and green. A chain link fence system is made up of a frame (posts and rails), fence fabric, and mounting and security hardware. We'll talk about all of these items in detail, starting with posts.

Posts

Posts are the vertical loadbearing members of the frame from which the fence fabric is stretched. Posts are available in 1⅝, 2⅜, 2⅝, 4, 6⅝ and 8⅝ inch diameters, but the nominal dimensions are expressed as 1½, 2, 2½, 3½, 6 and 8 inches. On average, the nominal post sizes are about ⅜ inches smaller than the actual sizes. In this book, I'll refer to post sizes by their nominal sizes.

Fence lines change direction at *corner posts*. *End posts* are, as the name implies, at the end of a fence line. A *gate post* is a terminal post to which a gate is attached. *Pull posts* are used to brace a long fence line or where there's a change in grade. Pull posts should be installed and braced at 500-foot intervals.

Corner, end, gate and pull posts are all examples of *terminal posts*. All terminal posts are fence anchors and undergo more lateral stress than line posts, so they must be bigger and thicker than line posts. *Line posts* are the intermediate posts between the terminal posts, and support the top rail and fence fabric.

Post size requirements depend on fence height. Most residential fences 5 feet high or less will have 2-inch terminal posts and 1½-inch line posts. For fences that are 6 feet and higher, use 2½-inch terminal posts and 2-inch line posts. Above grade, use the fence fabric as a guide. Set terminal posts 2 inches higher than the fence fabric, and line posts 2 inches lower.

Galvanized steel fence posts can be round, square, rectangular or C-shaped (like the one in Figure 5-1). If you're using C-shaped line posts, you'll still need round terminal posts in order to properly secure the tension bars and tension bands. Posts used for residential construction should be 16 gauge, with a minimum wall thickness of .065 inches. If you damage the coating, touch it up or replace it. You can fix small nicks in the coating with clear enamel or even clear fingernail polish. Those repairs will last several years. For bigger coating repair jobs, use aerosol paint that contains zinc.

Figure 5-1
C-shaped post

If the fence direction changes by more than 30 degrees at a post, that post is considered a terminal post.

Rails

Rails are the horizontal members of a chain link fence frame, and support the fence fabric. They're made of galvanized steel pipe and come in approximately 20-foot lengths, with diameters ranging from 1⅛ to 1⅝ inches. The most common size is 1⅜ inches (1½ inches nominal). The pipe can be either straight or *swaged*, which means one end has been drawn through a die that makes it smaller in diameter than the other end. With swaged pipe, the smaller end fits inside the non-swaged end, so you'll have a continuous top rail with flush joints, like the one in Figure 5-2.

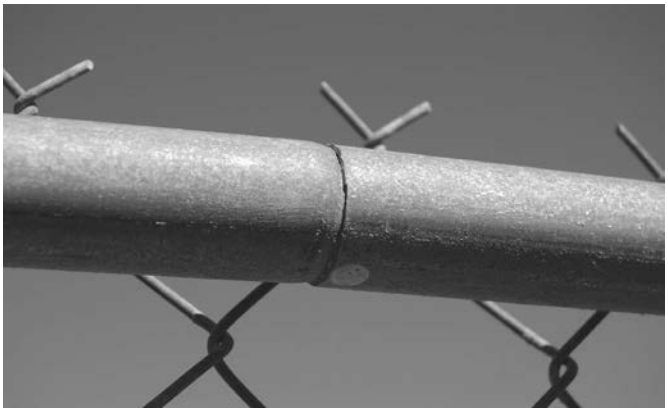

Figure 5-2
Swaged top rails

Figure 5-3
Sleeve coupling

Figure 5-4
Loop cap

Figure 5-5
Rail end cup and end rail band

If you don't use swaged top rails, you'll need sleeve connectors or sleeve couplings to join the sections. Figure 5-3 shows a sleeve coupling. They'll make the joint more apparent than a swaged pipe connection, but what they lack in aesthetics they make up for in strength. Sleeve connectors and sleeve couplings must be 7 inches long and able to fit over the diameter of the top rail. Allow for expansion and contraction by leaving some space in the connection. In other words, don't butt the pieces together too tightly.

Loop caps (also called *eye tops* or *line post caps*) support and align the top rail above each line post. See Figure 5-4. All post caps are aluminum alloy, formed steel or malleable cast iron and designed to shed water — to prevent it from getting inside the post. If the top rail is attached to a building wall, secure it with a metal flange. Fences that don't have a top rail, which I'll discuss below, should be waterproofed with acorn post caps in lieu of loop caps.

The top rail is secured to terminal posts with a *rail end cup* and *end rail band* (brace), as shown in Figure 5-5. Sometimes a 7 gauge galvanized marcelled coil-spring tension wire, like the one pictured back in Figure 5-1, is installed in lieu of the top rail. This is a good security precaution, because it eliminates a top handhold. Depending on local building regulations, you'll install the tension wire anywhere within 2 to 12 inches of the top of the fabric. Tie the tension wire to the fence fabric on 12-inch centers with 12 gauge steel wire or 9 gauge aluminum alloy hog rings.

Tension wire fences over 6 feet high require terminal post bracing consisting of a top or middle rail, as well as a truss bracing or adjustable ⅜-inch galvanized tension *(truss)* rod. Figure 5-6 shows a tension rod secured by a brace rail end cup. Brace rails are intermediate rails that brace terminal posts.

Truss bracing should be run diagonally from the top of the terminal post to the bottom of the adjacent line post. The angle between the brace and the ground shouldn't exceed 50 degrees. Fences over 12 feet high require a center rail. Center rails attach to line posts at right angles, with a fitting called a *boulevard clamp*. See Figure 5-7.

Fence Fabric

Chain link fence fabric is a diamond mesh made from zinc-coated steel wire. Mesh size measurement is based on the inside distance between parallel wires in the fabric. Light residential fences usually have 2½-inch mesh; most industrial fences have 1- or 2-inch mesh.

Fence fabric is sold in 50-foot rolls, in heights ranging from 3 to 12 feet. Each individual wire in the fence fabric is called a *picket*. Wire gauge is a measure of the wire's diameter. A higher gauge number indicates a smaller wire diameter. Some localities require 11 gauge wire for fences up to 5 feet high and 9 gauge wire for higher fences. You may also run across the term *diamond count*, which is the number of mesh openings from the bottom edge to the top edge of the fabric.

Fence fabric is given a protective coating either before or after it's woven. *Galvanized before weaving (GBW)* fence fabric, as the name implies, is coated prior to the weaving process. *Galvanized after weaving (GAW)* fence fabric is coated after weaving, which provides better rust protection.

Some fence fabric is coated with a zinc-aluminum alloy, which offers enhanced corrosion protection. Class 1 zinc-aluminum coating must weigh at least 0.60 ounce per square foot of fabric and Class 2 must weigh 1.00 ounce per square foot.

Chain link fence components are also available with PVC coating, which comes in a variety of colors. A Class 1 PVC chain link fence has an extruded PVC coating over the steel fence members. A Class 2A fence has an extruded PVC coating adhered to the steel fence members. A Class 2B fence has an extruded PVC coating fused and adhered to the steel fence members.

Total fabric height is measured from the ends of the *twists* on one edge to the ends of the *knuckles* on the other (the top and bottom edges of the fabric are called *selvage*). The knuckles are the closed loops at one selvage edge and the twists are the twisted ends at

Figure 5-6
Brace rail and end cup

Figure 5-7
Boulevard clamp

Zinc coating comes in two weight classes:

1. Class 1 zinc is coated at the rate of 1.2 ounces (minimum) per square foot of fabric.
2. Class 2 zinc is coated at the rate of 2 ounces per square foot.

Coating thickness depends on the fabric's wire gauge. For 6 gauge fabric, the coating is 0.192 inches thick; for 9 gauge fabric, it's 0.148 inches thick; and for 11 gauge fabric, the coating is 0.120 inches thick.

Figure 5-8
Twists

Figure 5-9
Tie wire

Figure 5-10
Tension bar and tension bands

the opposite edge. The twists require 1½ machine turns during manufacture and the wire ends *(barbs)* extend ¼ inch beyond the twists. See Figure 5-8. Fences less than 6 feet high, or with mesh openings smaller than 2 inches, are knuckled at both selvages to prevent injury to people and pets. On 6-foot or higher fences, the twists are often placed at the top for added security.

Chain link fence fabric is tied to the top rail and line posts at a maximum of 24-inch and 16-inch intervals, respectively. There needs to be a tie wire at the top and bottom of each post. Tie wire can generally be 12 gauge galvanized steel wire or 9 gauge aluminum tie wire. In California, you must use 11 gauge galvanized steel wire or 6 gauge aluminum tie wire. The tie wire should be strong enough to withstand a 180-degree bend without breaking and each tie should be given at least one complete turn around the fabric, as shown in Figure 5-9.

Fence fabric should be installed two inches above the ground, and on the outside of the posts of the area it encloses. Any tension wires run through the bottom of the fence should be within the lower three inches of the fabric.

Fence fabric attaches to the terminal posts via a galvanized steel *tension bar* that's threaded through the end edge of the fabric. The tension bar distributes the stretching force evenly along the fabric. See Figure 5-10. Galvanized steel tension bars used for 1¾- or 2-inch mesh should be 3⁄16 inch by 5⁄8 inch for fences up to 5 feet high and 3⁄16 inch by ¾ inch for higher fences. Aluminum alloy tension bars should be a minimum of 1/4 inch by 3/4 inch. A good rule of thumb is to cut the tension bar 3 inches shorter than the fabric height. It needs to be long enough to grip every loop of the fabric without interfering with rail end connectors.

Tension bands (also shown in Figure 5-10) fasten tension bars to the end posts. Tension bands require nuts and *carriage bolts* to secure them in place. On carriage bolts, unlike regular bolts, the shank end near the head of the bolt is square. The holes in the brace bands and tension bands are also square. See Figure 5-11. This design lets you tighten the nuts without using two wrenches.

Figure 5-11
Carriage bolt

Carriage bolt heads are shaped like a flattened half moon, so you can't grip them with a wrench or screw driver. You can only turn the nut. When fencing is intended to secure an area, put the nuts on the inner, protected side of the fence, with the bolt heads on the outside. Otherwise, anyone with a speed wrench can get inside in seconds. Use $^{5}/_{16}$-inch-diameter by $1^{1}/_{4}$-inch-long bolts for fencing. On gate hardware, use ⅜- by 1¾-inch bolts for the female hinges, ⅜- by 3-inch for the male hinges, and ¼- by 1¼-inch bolts on gate latches.

Secure tension bars to the posts with galvanized tension bands or tension clips spaced no more than 16 inches on center. The fabric should extend above the top rail. This distance above the rail can vary, depending on whether the top selvage is knuckled or twisted. If knuckled, a $^{1}/_{2}$-inch distance is common; and if twisted, 1½ inches is about right. For safety purposes at children's playgrounds, however, the knuckle can be aligned flush with the top rail, as shown back in Figure 5-3. Tension bands or clips should be at least 14 gauge, 0.074 inches thick and ¾ inch wide for posts up to 4 inches in diameter; and 0.108 inches thick and ⅞ inch wide for larger posts. Use at least four tension bands to secure the tension bar (even on a 4-foot high fence), with one near the top and one near the bottom of the post.

If the distance between terminal posts is less than 50 feet, you'll have excess fence fabric after securing the portion that you need with tension bars. Remove the excess by untwisting a picket wire or cutting it with heavy-duty wire cutters.

If the fence is longer than 50 feet, join two fabric rolls by untwisting a picket from one roll and weaving it through the end of another roll. Then close the knuckles and twists.

Fence Gates

Chain link walkway gates are 2 inches shorter than the fence. Typical gate opening widths are 36, 39, 42 or 48 inches. That includes clearance for hinges and latches. In other words, if you're installing a 3-foot-wide gate, the inside distance from gate post to gate post is 36 inches. *Ornamental scrolls*, like the one in Figure 5-12, are a popular way to spruce up the visual appeal of a chain link gate.

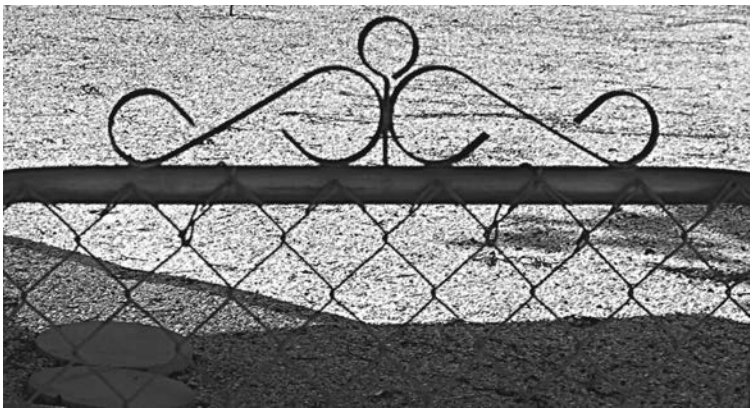

Figure 5-12
Scroll

You can buy ready-to-hang chain link gates in a variety of sizes. There are also gates in kit form that have a welded frame, but you have to assemble the fabric and hardware. I recommend you buy fully manufactured gates. The difference in cost isn't enough to offset what you save in labor.

School fences that have locking gates must be far enough away from the school buildings to allow at least 3 square feet of space per occupant in a dispersal area. In addition, the dispersal area must be at least 50 feet away from the school buildings.

For driveways, gates come in pairs to fit openings of 10 and 12 feet. Each gate pair member is either 57¼ or 69¼ inches wide, respectively.

Double drive (double swing) gates are made up of two leaves. Center-opening double gates need hardware to fasten the two sections together when they're closed. Use a *fork* or *butterfly latch* and an *L-bar (drop rod)* made of aluminum or galvanized steel. The latches wrap around the posts to lock them together. Fork latches require manual operation, but butterfly latches are self-latching. The L-bar slides into a pipe in the ground (or in concrete), locking the gate in place.

Sometimes you may be stuck having to make a gate to fit a pre-built opening. Buy tubular L-corners and cut 1½-inch steel pipe to the proper size to fit between them. The corners are slightly larger than the pipe, so the pipe fits inside them. Fasten the pipes and corners together with small bolts or screws. Then apply the fabric, just as with a kit. The gate fabric should be the same that you used for the fence. Secure it to the gate frame with tension bars and tension clips *(gate clips)* installed on 16-inch centers — the same way the fence fabric is attached to the terminal posts. These gates built "in the field" aren't quite as strong as factory-built gates, but they work just fine.

The gate frame and posts should be designed so that the gate doesn't sag by more than one percent of the gate width. For example, a 48-inch-wide gate should not sag more than 0.48 (0.01 × 48) inches. Gates over 4 feet wide should have a galvanized ⅜-inch adjustable truss rod with a turnbuckle.

Allow three inches for the hinge between the gate post and gate frame. Figure 5-13 shows a *hook-and-eye* hinge. The hook (male hinge) is secured to the post, and the eye (female hinge) to the gate. Use at least two malleable steel hinges per gate. The hinges should be offset and equipped with hinge pins that allow a 180-degree swing arc. Be sure you use the correctly sized tension bands, post latches and hinges. These are sold by their inside diameter (ID). Match them to the outside diameter (OD) of the post.

Figure 5-13
Chain link gate hinge

Sliding gates, like the one in Figure 5-14, don't have hinges. They glide on wheels mounted on a rigid axle so they can only travel in a straight line. This type of installation requires the wall or fence next to the gate to be at least as long as the gate so the gate can clear its opening.

Figure 5-14
Sliding gate on wheels

A *cantilever* slide gate frame slides horizontally between two sets of guide wheels mounted on a second set of posts (see Figure 5-15), and note the 1¼-inch vertical stiffeners. Gates longer than 8 feet need vertical member reinforcement stiffeners at a minimum of 8-foot centers. Likewise, gates higher than 7 feet need a horizontal stiffener.

How big should your gate post diameter be? It depends on the gate width and fabric height. For a single gate in a fence less than 6 feet high and up to 6 feet wide (or double swing gates up to 12 feet wide), you'll need to install 2-inch posts. If the same gates are installed in a fence higher than 6 feet, you'll need to install 2½-inch posts. Install 6-inch gate posts for 6-foot-high fences with a single gate between 13 and 18 feet wide. Use 8-inch posts for 6-foot fences with a gate more than 18 feet wide.

In most contracts, chain link fences are paid for by the linear feet of fence installed, less the gate widths, which are paid by the number and size of each gate installed.

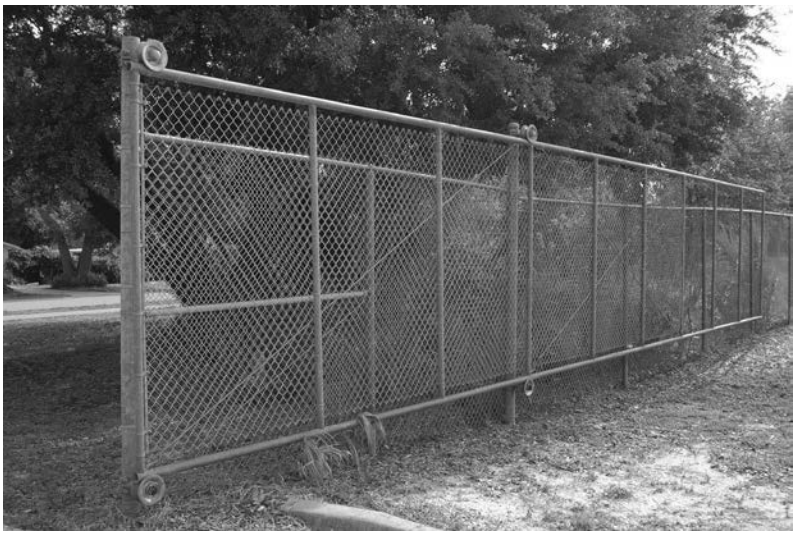

Figure 5-15
Cantilever slide gate

Security Fences

There are many businesses and even some homes that need additional security to discourage intruders from entering the property. Heavy-duty chain link fence fabric makes the fence harder to cut. A smaller mesh makes the fence harder to climb. Normal industrial fence fabric is made with a 2-inch mesh and 11 or 9 gauge fabric. For greater security, you can install 6 gauge fence fabric with ⅝- or ⅜-inch mesh.

Use either 9 or 6 gauge steel or aluminum wire ties to secure the fabric on security fences. If the tie wire is polymer coated to match the fence color, use 11 or 9 gauge tie wire. You can eliminate the top rail by installing a 7 gauge tension wire in its place. This makes the fence hard to climb by eliminating the top handhold. Install 12 gauge steel or 9 gauge aluminum hog rings on 12-inch centers to attach the fabric to the tension wire.

Figure 5-16
Barbed wire on 45-degree extension arms

For improved intrusion protection, you can install barbed wire along the fence. There are a variety of styles to choose from, including: 45-degree (shown in Figure 5-16), vertical, and V- or A-shaped extension arms supporting several wire strands on 5½-inch centers. Standard grade aluminum-coated barbed wire has barbs spaced 5 inches apart. I generally recommend two-strand 12½ gauge barbed wire with four-point 14 gauge barbs. High-security aluminum-coated barbed wire has ⅜-inch barbs that are set 3 inches apart.

Coiled aluminum strip wire (sometimes called *razor wire* or *barbed tape*) offers maximum protection against intrusion. I don't recommend using it for containing animals, however, since it does too much damage to anything that gets tangled in it. Figure 5-17 shows a coil of razor wire threaded though the knuckles of a chain link fence topped with barbed wire.

Sports Fences

Sports fences are designed to protect athletes and spectators from injury, so these types of fences are built higher and stronger than residential fences.

Courtesy of Bryan Svalina

Figure 5-17
Razor wire coiled through barbed wire atop a chain link fence

Baseball Backstops and Fences

Baseball field backstops should be at least 16 feet high, and built within 25 feet of home plate. Elementary school backstops are usually made of three chain link panels with no overhangs. The angled outer panels are called *wings*. Middle school backstops, like the one in Figure 5-18, usually include an overhang panel. The center of the backstop should be perpendicular to the line from the pitcher's mound to home plate. Backstop wings should be parallel to the base lines.

Use 2⅜-inch galvanized steel posts for the main uprights, and 1⅝-inch rails installed at the bottom and top. Set backstop posts in 3,000 psi concrete. Intermediate rails should be installed on 6-foot centers (maximum). The fence fabric should be 11 or 9 gauge with a 2-inch mesh, installed on the field side of the frame. Where fabric must be must be joined, overlap the fabric by two

Figure 5-18
Middle school backstop

Figure 5-19
Tennis court gate

diamonds, or 4 inches, and secure it with tie wire. Use 9 gauge aluminum tie wire to secure the fabric to posts and rails. Space the tie wires on 14-inch centers at the posts and 18-inch centers at the rails.

The outfield fence should be 8 feet high and covered with 9 gauge fabric, with 2-inch mesh diamonds. To prevent foot injuries, the bottom fabric should not be higher than 1 inch above grade. Player bench protective fences should be at least 6 feet high, and spectator protective fences should be at least 8 feet high. On all sports fences, use 11 or 9 gauge mesh that's knuckled at both selvages for safety. All sports gates should swing out from the field of play.

Batting Cages

Batting cages are usually 10 or 12 feet high. Terminal posts should be 2⅜-inch galvanized pipe weighing 5.79 pounds per linear foot, while line posts should be 2⅜-inch pipe weighing 3.65 pounds per linear foot. Set all posts in 3,000 psi concrete, with footings 12 inches in diameter and 36 inches deep. All rails should be 1⅝-inch pipe weighing 2.28 pounds per linear foot. Use 11 or 9 gauge fence fabric with a 2-inch mesh. Batting cage gates should have a 180-degree swing.

Tennis Courts

Standard tennis court fences are 10 or 12 feet high, and use 1¾-inch 11 or 9 gauge mesh with both selvages knuckled. All gates should be 3 feet wide with a 180-degree swing, and a transom panel above the gate. See Figure 5-19. Tennis court fences should be installed 12 feet from the sides of the tennis court and 21 feet from the backs (baseline) of the court. 3- and 2½-inch-diameter pipes are typical for the terminal and line posts, respectively. Use 1⅝-inch pipe for the horizontal rails. If the tennis court will have windscreens, be sure to take the expected wind stresses into account when deciding on post size and quality.

Swimming Pool Fences

Swimming pool fences are designed to keep children (and some dog breeds — notably, English bulldogs) from gaining unattended access to the pool and drowning. The top of a pool fence should be at least 48 inches above grade, unless the pool structure itself is built above grade. In that case, install the fence at least 36 inches from the pool structure. The clearance at the bottom of the fence should be no more than 2 inches if the fence is installed on grade. This distance can be increased to 4 inches if the fence is installed over concrete, or if the pool structure is above grade.

Fence openings shouldn't allow a 4-inch sphere to pass through. On fences with horizontal, as well as vertical members, install the top horizontal member and lower horizontal member at least 45 inches apart on the pool side of the fence. Install the vertical members no more than 1¾ inches apart unless the distance between the horizontal members is greater than 45 inches which will allow you to space the vertical members up to 4 inches apart. On solid fences with no openings, don't allow indentions or protrusions on the fence that could be used for climbing.

Figure 5-20
Dangerous swimming pool fence design

Use 11 gauge fence fabric with openings (from diamond corner to diamond corner) no wider than 2¼ inches unless there are slats reducing the openings to 1¾ inches. Pool gates should open outward, away from the pool, and be self-closing and self-latching. If the latch is located less than 54 inches from the bottom of the gate, the latch should be installed on the pool side and mounted at least 3 inches from the top of the gate. There should be no openings greater than ½ inch wide between the gate and the latch post within 18 inches of the release mechanism. Also, make sure that any permanent structure that could be used to climb the fence is at least 48 inches away from the fence. Figure 5-20 shows a potentially dangerous pool fence design, where the planter could be used as a step stool, enabling a small child to access the pool area.

Children's Play Areas

Chain link fences around children's play areas must be at least 4 feet above grade with a ground clearance of not more than 4 inches. Use 1¼-inch fabric mesh. Single pedestrian gates should open away from the play area. They need to be self-closing and self-latching, with the release mechanism at least 4 feet above grade. There should be no openings more than ½ inch wide between the gate and the latch post within 18 inches of the release mechanism. Any permanent structure that could be used to climb the fence must be at least 6 feet away from the fence.

Dog Runs

Dogs get bored running in a circle, so design dog runs that are long and narrow. This will also help the dog get more exercise. Use 1⅜-inch galvanized pipe for the framework and install posts no more than 8 feet on center. For any fence over 5 feet high, install three horizontal braces. Use 11 gauge fabric and,

Courtesy of Carol Urbanczyk

Figure 5-21
Dog run

if the run is on grade, extend the fabric 12 to 18 inches below grade to stop the dog from digging under the fence. If the run is installed over a concrete floor, allow a 1-inch space between the slab and the fabric to make cleaning the run easier. See Figure 5-21.

Installing a Chain Link Fence

I'm going to describe two typical chain link fence installations — one on fairly level ground, and the other on a hillside. Even so-called level ground usually isn't; it has high and low spots — but they won't cause you much trouble if they're not too extreme.

Your first job is to walk the fence line and determine the lay of the land. Find both ends of the fence, and drive a 24-inch stake into the ground at both points. Tie a string between the stakes and hang a line level on the string. Adjust the line on one or both stakes until the string is level. Walk the stringline with a tape measure, and measure from various points on the string to the ground. All measurements should be within 3 inches of each other … that's plus or minus 1½ inches from the height of the string on the stake. This will work for runs up to about 50 or 60 feet. Beyond that, I suggest you use a surveyor's transit.

If there are high spots, dig them out and set the dirt aside for now. Don't fill the low spots yet. An alternative is to set the fence on the high spots and fill in the low spots later. The problem with this is that you have to have a source for fill dirt.

Digging Post Holes

The next step in the process is to dig the corner post holes and set the posts to the proper height. Remember that the fence fabric will be an inch or two below the top of the end posts.

Be sure to set the posts several inches inside the property line so the concrete footings don't encroach on the adjacent property.

Some localities require a post hole to be only three times the post diameter, but I recommend that you dig each post hole to be about four times the diameter of the post.

Unless you're required to dig extra depth to get below the frost line, dig or drill each post hole at least 24 inches deep for 4-foot fences — plus an additional 3 inches of depth for each foot of fence height beyond 4 feet, and an extra 3 inches to allow for drainage and leveling. For example, a 6-foot fence would require 33-inch (24 + (3 × 2) + 3) footings.

Use an auger to dig the holes to the proper depth, and then widen the diameter at the bottom by hand so that the hole is bell-shaped. A bell footing holds the concrete, and thus the post, in place so it resists lifting out vertically.

Fill the bottom of the hole with coarse sand, gravel or wet grout to a depth of 4 to 6 inches. Put the post in the hole and set it level and plumb. Brace the post into position and pour in the concrete a few inches at a time. Recheck for level and plumb several times.

I recommend setting the posts in 2,500 psi concrete. The specific mix requirements are one part portland cement, two parts sand and four parts aggregate. The slump of the mix should be 5 inches or less. Top off the footing in one of two ways: Overfill the hole so the concrete extends about 2 inches above grade, and trowel and crown the top to shed water away from the post, or pour it to 2 inches below grade if the area is to be sodded or surfaced with asphalt.

After setting the terminal posts, doublecheck them for height, plumb, and position one last time. Allow at least 24 hours for the concrete to harden.

If you hit solid rock before reaching your desired post hole depth, set the posts into the rock by at least three times the diameter of the post. A 2-pound hammer and cold chisel is a handy combination for breaking small amounts of rock. The hole in the rock should be half an inch wider than the post diameter. I recommend that you place the post into a steel sleeve to ensure the hole is large enough. Grout the hole with non-shrinkable grout and crown the top to shed water away from the post. Another situation that calls for a steel sleeve is when you're installing a fence over a concrete slab. You can place the posts into a steel sleeve with a steel plate flange at the top of the sleeve for added strength.

You can mechanically drive or drill posts into the ground if the soil is stable. As a rule of thumb, posts should be driven 6 inches deeper than the footing depth would be if you were digging a post hole. So if you're mechanically driving the posts for the 6-foot fence in the previous example, they will need to be driven 39 (33 + 6) inches deep. Once the post is driven, be sure to tamp and compact any soil that was disturbed during the driving process.

Gate Post Footings

Swing gate posts must be set in concrete. The appropriate footing size depends on gate width and fence fabric height. The tables below show recommended footing diameter and depth for a variety of fence height and gate width combinations.

For fences up to 6' high		
Gate Width	**Footing Diameter**	**Footing Depth**
Up to 4'	10"	30"
4-10'	12"	36"
10-18'	14"	36"

For fences 6' and higher		
Gate Width	**Footing Diameter**	**Footing Depth**
Up to 6'	10"	36"
6-12'	12"	36"
12-18'	16"	42"

Cantilever slide gate post footings must be 24 inches in diameter and 42 inches deep. Post footings for overhead slide gates up to 24 feet wide should be 12 inches in diameter and 38 inches deep.

Locate the Fabric Line

Now string a line from one end of each straight run of fencing to the other. Put the line on the outside of the posts (the side where the fabric will go) and 4 inches from their tops. Put another string at the bottom of the posts, at ground level. Measure along the bottom string from the end, terminal, or corner post to the desired position of the first line post. The line post should be at least 7 feet, but not more than 10 feet, from the end post. Mark the position of the first line post with chalk or a stake.

"If you're using privacy slats in the fence fabric, I recommend that you set the posts no more than 8 feet apart, especially in windy locations."

Position the remaining posts the same way, marking each as you go, at equal distances, and on 10-foot centers or less. If you're using privacy slats in the fence fabric, I recommend that you set the posts no more than 8 feet apart, especially in windy locations. Since the terminal posts are wider than the line posts, in order to get to post centerlines in the proper alignment, locate the line posts about ¼ inch inside the stringline.

Doublecheck to be sure the positions came out the way you expected. You want to make any necessary changes *before* you start digging. Once you're sure about the positioning, set your line posts the same way you did the end posts, doublechecking as you go. Again, let the concrete cure for another day or more.

It's acceptable to dig the line post holes at the same time you dig the terminal post holes. But you'll get more accurate positioning and spacing if you install the end posts before you dig for the line posts.

Install the Top Rail

Once the concrete for the posts has cured, you can start assembling the fence. Slide the required number of tension bands onto the end post. Be sure the flat side of the band is to the outside (fabric side) of the post. Now fasten a rail end to the end post using an end rail band and a 5/16- by 1¼-inch carriage bolt. Position the rail end so it's angled upward. It should be 1 inch from the top of the end post.

Next, slide a few loop caps onto a length of top rail. Set the top rail in place on the line post with the swaged end away from the end post. Put the non-swaged end of the top rail into the rail end until it bottoms, then slide it back out ⅜ inch to allow for expansion and contraction during temperature changes. Continue down the fence line, adding top rails with the required number of loop caps until you get to the end. You'll usually have to cut the last piece to fit. The piece you cut off will have the swaged end, so you can use it later in another section of fence.

Of course, if you're using plain end top rail, you'll need to incorporate sleeve connectors into the assembly process, as I discussed earlier in the chapter.

To install the last piece of top rail, first slide enough tension bands onto the end post so they'll be evenly spaced (about a foot apart) between the top and bottom of the post. Remember to mount them with the flat side out. Slip the rail end onto the top rail and put an end rail band onto the end post. Match the end rail band to the rail end, and connect the two with a carriage bolt. If you did everything right, the top rail will be level along its entire length. Now, tighten all the carriage bolts.

Install the Fabric

To remove excess fabric you know you won't need, open the knuckle and corresponding twist of an individual picket and unwind the strand up through the links until the fabric comes apart.

If any straight fence run exceeds 50 feet, you'll have to join two rolls of fabric. Start by putting the fabric ends you want to join side by side. Next, loosen the end knuckle and remove a picket from one roll and weave it through the end of the other roll. Then close the knuckles and twists.

Once you've got the correct fabric length, start at the first post and roll the fabric out on the outside of the fence line, 8 to 10 feet beyond the last post. Go back to the first post and thread a tension bar through the first set of loops in the fabric. Raise the fabric into position and secure the tension bar to the post with the tension bands, using carriage bolts. Remember, the heads of the 5⁄16- by 1¼-inch carriage bolts go outside the fence, the nuts on the inside.

Now, lift the fabric and tie it loosely to the top rail with aluminum ties every few feet. The fabric should extend about ½ inch above the top rail if the top of the fabric is knuckled or 1½ inches above the top rail if the top of the fabric is twisted.

Stretch the Fabric

Once you've attached the fabric to the full length of the fence, it's time to stretch it. A ratchet-type stretcher is best. It has a bar with hooks every few inches that grab the fabric. Other stretcher styles may require that you insert a tension bar into the fabric and hook the stretcher to it. In any case, once you've

got the stretcher latched to the post, and 2 to 3 feet into the fabric, you can begin stretching.

You may need to adjust *(dress)* the fence fabric as you stretch it, to keep all the diamonds in alignment. Properly stretched fence fabric won't sag or hang. It should give just slightly and then snap back when pushed. The fence fabric height should not vary by more than 1 inch at this point. When you've got it right, fasten the loops closest to the pole with a tension bar and tension bands.

Cut the excess fabric with a bolt cutter or heavy-duty wire cutter. Make the cuts between the tension bar links and the end post. Be careful you don't cut the links being held by the tension bar.

Now you can go back and add aluminum ties along the top rail at 12- to 18-inch intervals, and tie the fabric to the line posts too. Use at least four evenly spaced ties on the line posts with one at the top and one at the bottom of the post.

"Properly stretched fence fabric won't sag or hang. It should give just slightly and then snap back when pushed. "

Snap acorn caps onto the end posts and fill any low spots under the fence. Now you can use that dirt you removed from the high spots at the beginning of this project.

If specified, you can stretch a 7 gauge tension wire along the fence's bottom edge and connect the fabric and wire on 12-inch centers with hog rings. This stabilizes the fence during high winds, and keeps people (or alligators, in my home state of Florida!) from trying to squeeze under the fence. A bottom or mid-height rail, attached to posts with boulevard clamps, will also serve this purpose. I also recommend using a bottom rail for retaining wall applications, to prevent damage and push-out.

Hang the Gates

When you're done with the fence, it's time to install the gates. Attach the male post hinges to the gate posts. To prevent someone from removing the gate by lifting it off the hinges, install one of the male hinges with the pin pointing up, and the other hinge with the pin pointing down. Mount the female hinges onto the gate frame to match up with the male hinges. Align the top of the gate with the top of the fence, adjust the hinges, and tighten the bolts. Position the gate latch at a convenient height and tighten the bolts.

Figure 5-22
Chain link fence built on a slope

Installing Chain Link Fences on Hillsides

In the example above, I described leveling the fence path by cutting the high spots and filling the shallows. There's no rule that says a fence has to be level. You might install fences on hillsides, across valleys, or over large bumps, following the contour of the land. You can use chain link "on the bias," as much as 30 degrees off level. See Figure 5-22.

When you install a fence that's not level, try to keep the change in elevation constant from post to post. On very uneven ground, that won't be possible, and you'll need to use a stepped fence design. In that case, each individual post-to-post section is level, but stepping up or down at posts whenever needed.

If there are radical changes in the slope along the fence line, you may have to install end posts and tension rods at intermediate points along the line. You'd tension each section independently. At depressions, you can do two things: either fill the depression, or install a bottom rail on the fence and hang extra fabric from it. In the latter case, you should anchor the fabric to the ground with heavy metal stakes.

Visual Privacy Options

One major advantage of standard chain link fencing is that it won't blow over … even in strong winds. That's because there isn't enough surface area to provide much wind resistance. But the tradeoff is that it doesn't provide much privacy. You can, however, insert wood, metal or plastic privacy slats, as I mentioned at the beginning of this chapter. Not only do they increase privacy, but they screen the wind and act as a modest sound barrier too. Some privacy slats are even designed to simulate a hedge. You can weave them vertically or diagonally like the ones in Figure 5-23.

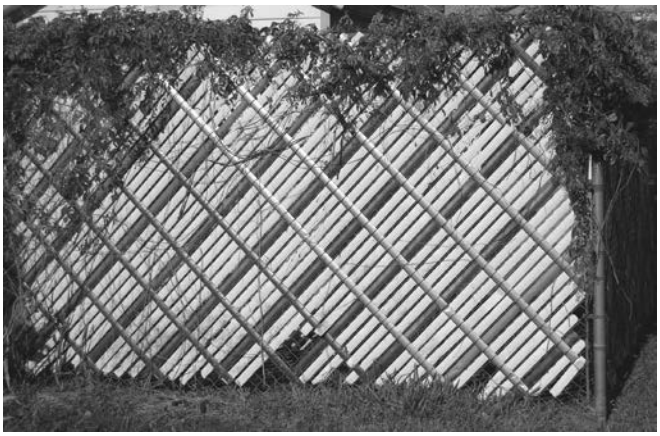

Figure 5-23
Privacy slats

Taking Off Chain Link Fence Quantities

I've created some spreadsheets in *Microsoft Excel* to make it easy to take off chain link fence quantities. They're available for free at www.craftsman-book.com. Once you're there, just click on the Download tab, the Free Software link, and then on Estimate and Bidding Forms.

Woven Wire Fences

Woven wire fences have horizontal strands of wire called *fillers* and vertical strands called *stays*. See Figure 5-24. On regular-duty wire mesh fences, the fillers are interwoven between the stay wires, which are held in place by heavier 10 gauge top and bottom strands. The intermediate stays and fillers are 12½ gauge. Stay wires are usually spaced 6 or 12 inches apart, but there are many different wire mesh fence designs available.

Woven wire mesh fencing material comes in rolls or panels. It's available with protective zinc (galvanized), aluminum and PVC coatings. Aluminum coating is best, but it's also the most expensive. The PVC-coated mesh is well-suited for home garden mesh fences.

Figure 5-24
Wire fence

You can attach woven wire fence material to metal posts with tie wire or you can staple it to wood posts. Don't drive the staples home until you've stretched the fabric into its final position. If you have to splice fence sections together, do so by crimping the wires together.

Chicken wire has six-sided mesh rather than rectangular mesh. *Hardware cloth* is the name for woven wire material with ¼- or ½-inch squares.

Wire Fencing Applications

Woven wire fences are often used to contain animals, such as the infamous "BAD DOG" in Figure 5-24. That may require a smaller mesh (especially near the bottom of the fence) where younger, smaller animals might try to squeeze through. To keep small animals in or out of an area, I recommend installing the first filler 3 inches from the bottom of the fence.

Why not just use the fine mesh all the way to the top? Fine mesh costs more, and animal containment fences are usually long. A small cost savings per linear foot can add up fast if you're building miles of fence.

Sometimes you'll have to combine wire fence with barbed wire either on the fence top or bottom. If you're containing chickens, ducks, or other birds, you'll need mesh that's a constant size all the way to the top and over the enclosed area. For baby chicks that don't fly, you don't need an overhead cover — a 12-inch high, ½- to 1-inch mesh will do the job.

"Don't bother trying to fence in a cat. They go anywhere they please."

Welded wire utility fences are usually 2 to 6 feet high, and made with welded galvanized 14 gauge wire. 12½ and 16 gauge wires fences are also available. Common mesh sizes are 2 inch x 4 inch, 1 inch x 2 inch or 1 inch x 1 inch. The fence is supported by studded T-posts. For pet kennels, set the posts on 10- to 20-foot centers, depending on the size and strength of the pet. When in doubt, I recommend 10-foot spacing. For garden use, however, you can space the posts 20 to 30 feet apart.

Hogs don't fly, but they root or try to dig under a fence. You can hold them in a fence that's 26 to 39 inches high, providing you put a strand of barbed wire at the bottom of the fence to discourage them from digging when they bump into it.

Sheep don't fly or root, so a 26- or 32-inch-high fence will keep them in. But it might not keep their predators out. To keep the sheep in and the wild animals out, bury the fence 18 or more inches into the ground so dogs, foxes and coyotes can't dig their way in. A two- to 3-foot apron of mesh on the ground

just outside the fenced area will work too. To keep predator animals from jumping over a sheep fence, string barbed wire from the top of the woven wire mesh upwards to about 6 feet.

Cattle don't fly, root, or have many predators. But they tend to think the grass is greener in the next field. When they come to a fence, they'll always lean on or over it. Use a 47- to 55-inch-high fence with a single strand of barbed wire a few inches above the top of the mesh. That discourages grazing over the fence.

Horses, like cattle, think life is better in the next field. Use the same setup I described for cattle, with one important exception: Eliminate the barbed wire, since the barbs can cause cuts that lead to infection. Instead, use a single strand of electrified wire along the top of the fence. Horses will learn quickly not to lean against it.

Use hardware cloth cages to contain small chewing animals like rodents and rabbits. They must be restrained from above, below and all the way around.

Don't even try to keep fur-bearing animals such as mink or muskrat inside wire fencing. They can chew their way through just about any wire fence. Use a solid steel cage instead.

For dogs, use a fence that's 47 to 55 inches high without barbed wire on top. If the dog is a digger, either run a strand or two of barbed wire at the bottom or bury wire mesh to discourage him. Sometimes you'll have to install wire mesh on top of a wood fence to keep a dog from jumping over it.

Don't bother trying to fence in a cat. They go anywhere they please.

Sometimes, a fence's main purpose is to keep animals out, not in. Deer are a real problem in some rural areas. They have great appetites, and their favorite food is anything in your new garden. Their second favorite is fruit hanging on trees. You'll need a fairly high fence — 72 inches or higher — to keep them out. You'll also need to install ground staples at 10-foot intervals to prevent deer from digging under the fence.

To protect individual bushes and trees from animals, bury a ring of fencing about a foot into the ground, 12 to 18 inches out from what you want to protect. No posts are needed.

Ornamental Wire Fences

Figure 5-25 shows an attractive ornamental wire fence that's been the popular norm in Europe and is growing in popularity in the U.S. The mesh is a steel-aluminum alloy welded to tubular steel top and bottom rails. These fences are available in 4-, 5- and 6-foot heights. The wires are 2, 4 or 6 gauge, welded at each intersection. Horizontal and vertical wire spacing varies, offering a variety of designs.

Wire Fence Posts

You can use wood, concrete or metal posts for woven or barbed wire fences. If you're using concrete posts, you have to dig post holes; metal posts are a different story. You only need to set the end or anchor posts in concrete. You can drive the line posts into the ground with a sledge hammer.

In places where wood fence posts are common, you can probably rent a motorized post driver to set the posts. With one of those, you can drive an 8-inch wood line post directly into the ground with a few blows. Set uncemented line posts 30 inches deep. Wood posts may topple during the rainy season, but that's less likely if the posts are set deep enough.

Courtesy of Jerith Mfg. Co.

Figure 5-25
Ornamental wire fence

Won't wood posts driven directly into the ground rot? Yes, but not as quickly as they will if you anchor them in concrete. That may surprise you after our earlier discussion in Chapter 3 on wood fences. Here's the reasoning: Rural fence posts are often made from unmilled, undried lumber or even logs. If you set them in concrete, they'll eventually shrink away from the foundation and leave a gap. Water and bugs get into the gap and cause dry rot and wood fiber destruction. Pretty soon, there's no post remaining. However, wood corner, gate and end posts are an exception to this rule, which I'll explain later.

Here's another reason why it's not necessary to set line posts in concrete: Open wire fences offer very little wind resistance, so they aren't as susceptible to wind damage.

Wood	Life expectancy
Cottonwood	1 to 3 years
Aspen	1 to 3 years
Ponderosa pine	2 to 4 years
Lodge pole pine	2 to 4 years
Western hemlock	3 to 6 years
Douglas fir	3 to 6 years
Western red cedar	12 to 15 years
Oak, hickory	15 to 20 years
Black locust	20 to 22 years
Western juniper	20 to 22 years
Osage orange	25 to 30 years

Figure 5-26
Life expectancy of untreated wood fences

Post Materials

In Chapter 3, I described a handful of residential fence lumber species. In rural areas, however, fences are often built from whatever materials are readily available. For example, posts and boards might be cut locally from species that aren't harvested commercially. Posts in rural areas are usually pressure-treated *peeler logs*. Figure 5-26 shows some estimates for how long you can expect various untreated post species to last. Of course, local conditions will determine actual post lifespan.

Any of these woods, if pressure treated, should last 10 to 20 years longer than what's indicated in Figure 5-26. Remember that the heartwood of any species is the insect- and dry rot-resistant wood. The sapwood isn't. If you use it, always have it pressure treated. You can also treat these woods yourself (see Chapter 3), which will add from 5 to 15 years' useful life.

Post Diameter	Side Load
3″	700 pounds
4″	1,450 pounds
5″	2,650 pounds
6″	3,450 pounds
7″	3,800 pounds

Posts come in diameters from 3 to 8 inches and in lengths from 5½ feet to 8 feet. The thicker the post, the more side load it can handle. Typical side loads a post can withstand before it snaps are as shown in the table to the left.

These are average figures for solid timber that's fairly dense. When approaching a post's maximum side load, it's a good idea to use the next higher-rated material from the ones shown above. For example, if you expect a maximum side load that's close to 700 pounds, use a 4-inch post rather than a 3 inch. I generally use 4-inch posts for line posts, and 6- or 8-inch posts (with braces) for end, corner, and gate posts.

Anchoring Corner, Gate and End Posts

Not every wood post can be set directly into the ground. Wooden corner, gate, and end (terminal) posts *should* be set in concrete, and should be at least 8 feet long with a 6-inch diameter. Do this not so much to anchor them as to form a *footing*. A footing distributes forces transferred from the post to a wider area. In this context, a post located where the fence changes direction by more than 15 degrees is considered to be a corner post.

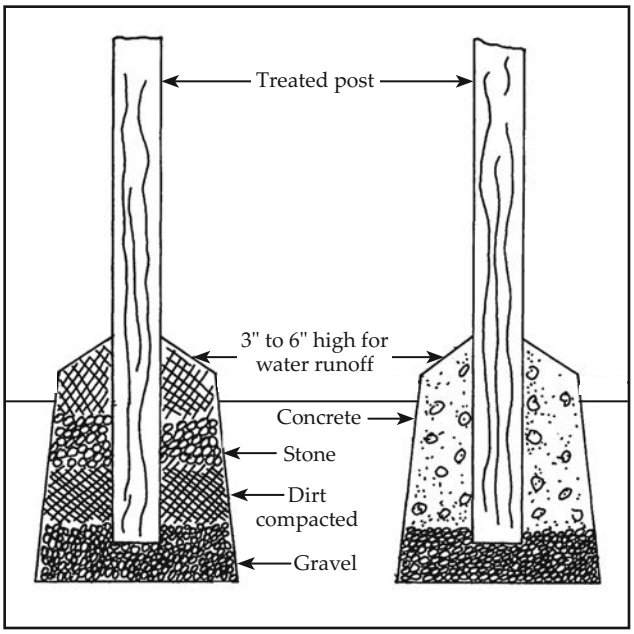

Figure 5-27
Treated wood post installation

Make the post hole a minimum of three times the post diameter, and wider at the bottom than at the top. *Use treated wood for these posts.* Dig your hole 6 inches deeper than the desired post setting depth, and fill those 6 inches with gravel. Place your post on the gravel and pack concrete around it, building it up slightly around the post above ground level. This creates a drainage path for water, as shown in the right half of Figure 5-27. The figure also shows an alternative line post installation method to the one I've already described above.

After about six months, check the cemented post bases for cracks. If you find any, fill them with hot tar or silicon caulking sealer.

Post Bracing

Tensioned wire exerts a great deal of horizontal force on the end and corner posts. So, regardless of which post material you use, it's important to emphasize the role that bracing

plays in wire fencing applications. Keep in mind that corner posts should be braced from both directions, since there's tension on both sides.

You might want to refer back to the second half of Chapter 3, where I discuss wood and wire gate bracing in detail. The same concepts apply here.

A typical bracing setup includes a brace post that's in line with the fence and located several feet inside the terminal post. A brace wire connects the top of the brace post to the bottom of the end post. That way, the wire diverts horizontal strain down to the strongest portion of the end post — near the ground. Diagonal wood braces do the same thing, but in the opposite direction — diverting strain from the top of the terminal post to the bottom of the brace post. When using a diagonal brace wire, however, you'll also need to install a horizontal brace between the terminal and brace post. Diagonal wood or wire braces should be about $1^1/_2$ times the exposed length of the terminal posts — any shorter than that and they won't effectively transfer the horizontal loads.

Metal Posts

Metal posts have several advantages: they're lightweight, strong and insect-, fire- and rot-proof. They'll even ground lightning strikes to some extent. For the best protection, add regular ground rods for every 150 feet of fence. (See the discussion at the end of this chapter.) The downside to using metal posts is that they're prone to rusting unless they're coated, and they're not especially attractive.

Steel line posts are typically 5 to 10 feet long and can be T-, U-, or Y- shaped in cross section. They have notches or studs to which wire fences or barbed wire are attached. The studs also work like a yardstick — you can count them to see how far the post has been driven into the ground, and to keep the strands of wire even.

Many metal posts have a weldable carbon steel anchor plate that's swaged or riveted to the post at 14, 16 or 18 inches above the bottom of the post. It helps keep the post upright and stable against side loading.

Metal line posts are easy to install. You can simply pound line posts into the ground with a sledge hammer or post driver.

You'll need to cement terminal or corner posts into the ground, however. In this context, a metal post located where the fence changes direction by more than 5 degrees is considered to be a corner post. Dig a hole that measures 18 x 18 inches at the top, 20 x 20 inches at the bottom, and at least 30 inches deep. Fill the hole with concrete, compact it, and then insert the post. You'll need about 6.25 cubic feet of concrete for each post. This foundation pier transfers side force on the post to the ground, keeping the post from tipping or pulling out.

You may have noticed that metal posts for wire fencing require larger foundations than posts for chain link fencing. That's because chain link fencing has a top rail. Top rails support the weight of the fabric vertically, so the loading force is downward. Wire mesh fences have no top rail, so the weight of the mesh and any force against it is transferred to the posts laterally.

Stretching Wire Fences

Unlike chain link fencing, where you stretch the fabric to a point inside the terminal post and then attach it, you install wire mesh or barbed wire by stretching the mesh *beyond* the terminal post. This means you have to install a temporary *(dummy)* post several feet past the end of the fence. Then fasten the stretcher to the dummy post so the wire is under tension right up to the terminal post.

Barbed Wire

Barbed wire is usually $12^{1}/_{2}$ gauge wire with 14 gauge barbs installed at 4 to 5 inches on center. It's mainly used on farms, but barbed wire also has applications on business and residential properties. As I described earlier in the chapter, you can combine it with other fences to discourage climbing. Attach wire mesh fencing or barbed wire on the private property side of the fence.

Barbed wire and wire mesh fences are designated as BW or WM fences, respectively. A BW fence has 5 lines of barbed wire, and a WM fence consists of a wire mesh fence with 3 strands of barbed wire. The barbs should be $^{3}/_{8}$ inches long. Attach the barbed wire to the top of a WM fence on 4-foot centers.

Barbed wire is dangerous. The stuff curls like a spring and it'll lash out at your eyes the moment you pull on it. Wear heavy clothing and gloves when working with barbed wire. Most importantly, protect your eyes. I wear a motorcycle helmet with a full face shield.

Figure 5-28
Barbed wire stay

Roll barbed wire off the end of the spool, not the side. If it comes off the side of the spool, you'll have a tangled, hazardous mess on your hands. Keep the wire under tension while you're unrolling it.

Don't try to stretch barbed wire by pulling on it with your truck. Use a ratchet-type tensioner or a block and tackle. Tension until it vibrates or oscillates when you pluck it. If you pull it too tight, it will break and recoil at high speed and with great force. Anyone in the way is going to be cut.

I suggest 20-foot post-to-post spacing (maximum) for barbed wire fences. You can put the posts farther apart if it's necessary to cross a stream or other obstruction. But if you do space posts farther apart than 20 feet, install wire *stays* between posts. The stays strengthen the fence and ensure proper wire spacing. See Figure 5-28. Twist the stays around each line wire to hold them in place.

Attach barbed wire to the end post by wrapping it around the post and then twisting it on itself. Twist the wire at least six times.

Fasten barbed wire to concrete or metal line posts with 11 gauge wire ties. Use $1^1/_2$-inch U-shaped metal staples on wood line posts. When you use staples, drive them in at a diagonal to the wire path. Angle them down slightly, and avoid driving them tightly against the wire. A little slack under the staples allows for expansion and contraction of the wire as the temperature changes. Also, if you hammer the staples tightly into the wire, you may nick the wire, causing a weak spot that will eventually break.

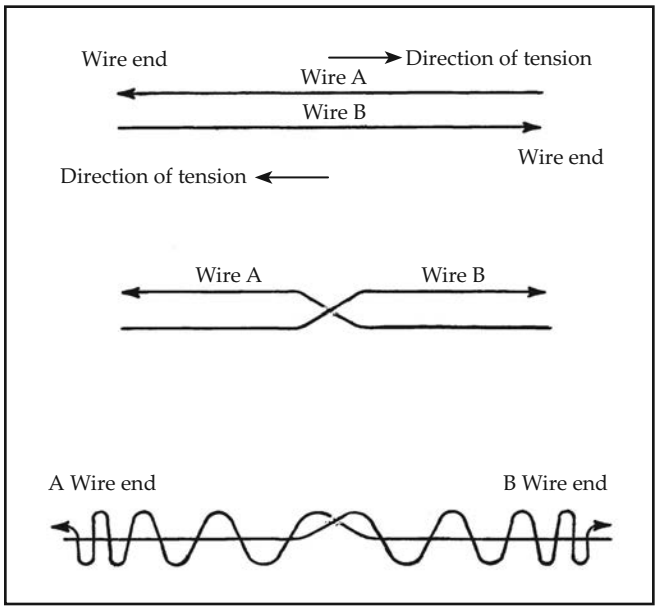

Figure 5-29
Spliced wire

There's one more reason to leave some slack in the staples on the line posts. Wire is stretched from terminal post to terminal post. The line posts just keep the wire in the proper position. If you pound the staples tight at the line posts, you'll have to remove or loosen the line post staples in order to make any major tension adjustments in the future. You can, however, make small tension increases in a sagging wire by putting a kink in the wire with a pair of fencing pliers.

Splicing Wire

Barbed wire is sold in 80-rod (1,320-foot-long) rolls. Mesh comes in 20- and 40-rod rolls, which stretch 330 and 660 feet, respectively.

Try to avoid splicing woven or barbed wire by making your terminations before the roll ends. If you must splice barbed wire, interweave the two wire ends and twist them around each other. As you can see in Figure 5-29, it's not pretty, but it works reasonably well in a pinch. A slightly more civilized method is to use a crimp joint, as shown in Figure 5-30. The wires are inserted into a metal sleeve, which is then crushed with a crimping tool. On woven wire fences, if one splice comes apart, the other crimp joints on adjacent wires will still hold the mesh together. Unfortunately, it's all or nothing in the case of barbed wire. That's why it's best to avoid splicing whenever possible.

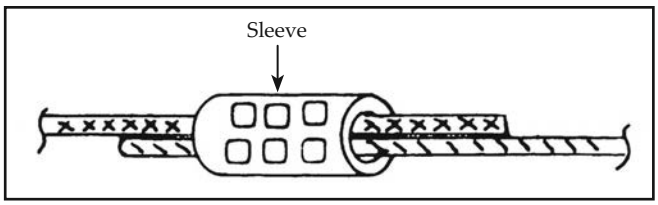

Figure 5-30
Crimp joint

Electrical Grounding

Finally, a word about grounding. All metal and wire fences should be grounded, even if the fence has wood posts. The purpose is to bleed off electricity from lightning strikes. Any person or animal near an ungrounded wire that's struck by lightning is going to be seriously injured or killed if the fence isn't grounded. Metal fence posts offer a certain degree of grounding, but they would have to extend 8 feet into the ground to be completely effective.

At each grounding location, drive an 8-foot-long, ½-inch-thick copper rod into the earth until the top of the rod is 6 inches below grade. Then clamp one end of a No. 6 or larger copper or aluminum wire to the copper rod. Attach the other end to the metal fence wire.

Ground the fence every 150 feet if it's within 100 feet of public roads or buildings, or if live electrical power lines run above and parallel to the fence. Otherwise you can use 500-foot grounding intervals. You should also ground the fence at any location where power lines cross over it.

This page left intentionally blank

Chapter 6

Metal Fences, Gates & Railings

FACTORY-MADE METAL RAILINGS and ornamental metal fences are widely used in residential, commercial and industrial areas. They're sturdy and effective, and can add to the appearance of a building. As you can see in Figure 6-1, when you combine ornamental metal fences with stone piers and shrubs, they can make an area secure, inviting and attractive.

Figure 6-1
Metal fence and stone piers

Some metal railings and fences are made from non-galvanized steel that's welded together at the jobsite. The railing sections are bolted to the underlying structure, then the sections are *gas welded* together. In gas welding, the heat for the weld is created by burning a mixture of acetylene and oxygen. After the metal is heated to just below its melting point, a *filler rod* of like material is touched to the heated area. The filler rod melts and forms the joint. Figure 6-2 shows the weld joints where two sections are connected. This picture illustrates a common welding mistake — the joint should have been ground smooth before it was painted.

Once the railings and fences are welded together, they're primed and painted with rust-resistant paint. Unfortunately, they're still rust-prone because each weld location represents a point of vulnerability. Gaps in the weld allow moisture to get inside the tubing and cause it to rust. Then the rust stains the fence itself, and the surface under it.

Figure 6-2
Bad weld

Figure 6-3
Metal fence with screws and rivets

Galvanized steel fences and railing products are commonly assembled with rivets. See Figure 6-3. They have fewer metal edges and welds, and require less maintenance than non-galvanized products.

Post size and weight will determine overall fence strength, but aluminum-alloy metal products aren't as rigid as their steel counterparts. Balancing this out, aluminum fences and rails require less maintenance because of their rust-resistant polyester powder-coated finish. The components are assembled with pop rivets and screws driven into pre-punched holes.

The biggest problem with aluminum is that it tends to show wear over time, especially in areas with a lot of traffic. And when you put aluminum rails together with skateboarders … well, that wear and tear time speeds up considerably.

Build Your Own or Use Prefab Fencing?

On the surface, the prefab metal fencing business looks easy enough. If you're only going to install it, and if it's designed to go together without welding, you don't need much more than hand tools: a wrench, hacksaw, hammer and some drills might be enough.

But if you want to make metal fencing your specialty, you'll have to learn about welding and metal working. You won't have a lot of competition in this end of the business because of the specialized equipment, knowledge, and skills required. I'll spend plenty of time discussing welding later in this chapter, but for now I'll talk a little more about the tools and rules of metal fence building.

Figure 6-4
Mounting device for prefabricated metal fence

Tools

Square or rectangular tubing is easy to work with and available in a wide range of sizes and weights. You'll need a table or radial arm saw, welding equipment, a bench grinder, a ½-inch variable-speed power drill, some cleaning chemicals, and painting materials and tools.

Round tubing is a little harder to work with. To weld a circular rail and post together, you have to grind the end of the rail to a curve so its shape conforms to the shape of the post.

Working with sheet stock is the most difficult, and uses the most expensive tools. Sheet steel is usually sold in 4- x 8- and 4- x 10-foot sheets. You'll need a *shear,* a cutter capable of cutting the sheets into strips. You'll also need a *power brake* to bend the steel into the shape you want. Both tools produce several tons of force and should only be used by operators who know how to handle them properly. I recommend farming this kind of work out to a professional metal fabricator.

Working With Prefab Railings

Fully welded metal fencing material can't be bent to fit the angle of a stairway, so you have to order or custom-build stair railings. That takes extra time and money. Or you can use prefab railings that have flat metal strips for the vertical bars. The strips are twisted for added strength, but are flat where they're attached to the top and bottom rails. By holding the bottom rail steady and pushing laterally on the top railing, you can make these railings fit a stairway of any angle.

You can buy these prefab railings at building centers in 4-, 8-, and sometimes 12-foot lengths. They come factory finished, usually in black or white. They also come with the necessary nuts and bolts, L-brackets, and post caps. You choose suitable anchors to fasten the railing into concrete, soil, wood or to the structure itself. Gates and associated hardware are also available.

Installation of a Prefab Metal Fence

Figure 6-4 shows a close-up of the mounting system for a prefab metal fence. To fasten the L-bracket to the block with an expansion bolt or screw, first drill the block to accept the bolt or screw and its sleeve. Then insert the sleeve into the hole. When you drive the bolt or screw into the sleeve, the sleeve expands and locks in place. You can still remove and reinstall the bolt or screw at any time. You'll need a ½ HP variable-speed drill and carbide-tipped drill bits for this job. Depending on the size and weight of the fence, use ¼-, ⅜-, or ½-inch bolts to secure it. The catalog or package label for the expansion bolt will specify what size drill bit to use.

Figure 6-5
Handrails over wide stairways

Figure 6-6
Rail post bolted to steps

Handrails like the one shown in Figure 6-5 need to be installed at no wider than 88 inches on center on wide exterior stairways. The hand grip portion of the handrail should be 1¼ to 2 inches wide and 30 to 34 inches above the stair nosings. The handrails should run the full length of the steps and extend 6 inches beyond the top riser. If the handrail terminates at a wall, leave a 1½-inch gap between the two to allow for expansion and contraction due to temperature changes.

You can cement handrail posts directly into the steps, but that makes them hard to remove if it becomes necessary. A better attachment method is to drill holes in the concrete slightly larger than the posts. Then insert the posts in the holes and pour epoxy or quick-set hydraulic cement (portland cement) into the hole surrounding the post; hydraulic cement expands as it cures. If you mount the posts this way they'll hold tight, but they can be removed without breaking the concrete. Another option is to bolt railings to the steps as in Figure 6-6, or set them into a base that's bolted to the steps (Figure 6-7).

Figure 6-7
Rail post set into base plate

Metal Gates, Latches and Hinges

Fence contractors often buy factory-manufactured metal gates. Most of them don't have either the necessary equipment or experienced employees able to handle this specialized building process. Factory-built metal gates are usually square, primed or painted, and sometimes predrilled for hanging.

Always buy the metal gate *before* building the wall or cutting the gate opening in an existing wall. You can easily cut and modify a wood gate to fit

Figure 6-8
Metal pedestrian gate

Figure 6-9
Metal drive gate post

Figure 6-10
Metal drive gate hinged to stone pier

Figure 6-11
Metal gate anchor

an opening; it's not so easy with a metal gate. Buy the gate first and build the wall opening around the physical dimensions of the gate.

You can buy metal gates in a range of sizes and decorative designs. Most of them are made from square steel tubing, sometimes formed into designs, but usually straight. Security gates may have wire mesh welded on one side, and an extra-large plate at the latch position.

Strong mounting devices are necessary for extremely heavy metal gates. Figure 6-8 is a good example of this heavy-duty hardware, showing a metal walk gate hinged and latched to large metal posts. Figure 6-9 illustrates a metal drive gate hinged to a heavy metal post, and Figure 6-10 shows a metal security gate hinged to a stone pier — which is actually a concrete column with a stone façade. Huge anchor bolts were cast into the column and used to secure the gate hinges (see Figure 6-11).

Hook and eye hinges come in three sizes: 6 inch, 8 inch, and 10 inch. These hinges are used to attach metal gate posts to block walls. The hooks come with a flat tang, but if there's room inside the wall cavity, you can bend the tang downward to make it harder to pull out. Weld the tube to the gate in position so it rests on the hook.

Figure 6-12
Park gate

Figure 6-13
Pipe and wire gate

You can secure hinges to metal gates with bolts, screws, or by welding them in place. I prefer welding, since a would-be intruder can't just unbolt the hinge and get in. The post side of the hinge is usually protected from tampering by the gate itself, so you can use bolts or screws on that side. If the gate is damaged or needs replacing, you can remove it when it's open.

Another type of metal gate is shown in Figure 6-12. This is the kind of gate used at many park entrances. Figure 6-13 is a metal pipe gate faced with heavy-gauge wire. Figure 6-14 shows an ornamental security gate protecting the front door of a house.

Figure 6-14
Residential ornamental iron security gate

Heavy-Duty Fences and Rails

A highway railing is made of sheet steel with a galvanized coating to prevent rust. As you can see from the gaps around the bolt heads in Figure 6-15, the joint is fairly loose. There's another metal plate behind this joint that's bolted tightly to the steel post (Figure 6-16). The rail sections *float* over the stationary plate when the metal expands and contracts. Sections of highway rail should overlap at least 12½ inches; the wood posts should be pressure treated and spaced no more than 12½ feet on center.

Figure 6-17 shows a corral made of welded pipe. The fence might be factory-made or built on site. Either way, it's effective … and the livestock won't hurt themselves on the smooth, round pipe.

Pipe handrails are normally used on handicap ramps. And any ramp with a slope of 1 inch (vertical) in 20 inches (horizontal) will require handrails. Maximum ramp slope allowed is 1 inch in 12 inches. The handrails should project 3½ inches beyond the wall.

Figure 6-15
Road guardrail, front view

Figure 6-16
Road guardrail, rear view

Courtesy of Gena Steelman

Figure 6-17
Corral fence

Figure 6-18
Metal pedestrian guardrail

Pipe guardrails provide a secure handhold to prevent people from slipping or falling off a walkway in bad weather conditions. If you've ever tried to walk on an iced-over sidewalk that has no guardrails, you know how helpful they can be. They're also used to keep bicyclists and skateboarders from running off shared-use paths. Pipe guardrails are usually made of aluminum and bolted to or set into the concrete. See Figure 6-18.

Pipe handrails and guardrails should be no less than 34 inches and no more than 38 inches high. If a handrail adjoins a wall, allow at least 1½ inches for hand space. Handrails with a circular cross section should have an outside diameter of at least 1¼ inches but not greater than 2 inches. If the handrail isn't circular in cross section, the perimeter of the rail should be between 4 and 6¼ inches, with a maximum cross section dimension of 2¼ inches.

Welding Safety

Here are some essential safety rules:

1. Always protect your eyes against ultraviolet radiation. U/V rays damage the retina of the eye, causing blindness.
2. Keep the welding area clear of all combustible materials.
3. Have a fire extinguisher nearby.
4. Welding fumes can kill. Use a respirator, preferably one that contains its own air supply.

Welding

No matter what kind of metal fencing you build, you'll need welding equipment and people who know how to use it. Welding can be hazardous to both people and property — careless or inexperienced welders cause millions of dollars of damage each year, so always follow strict safety practices to keep yourself out of that category.

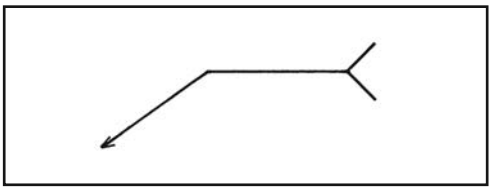

Figure 6-19
Basic weld symbol

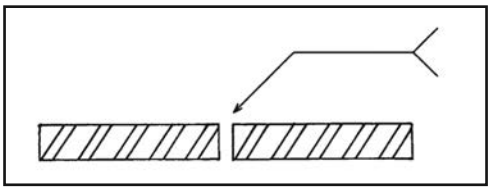

Figure 6-20
Weld here, only

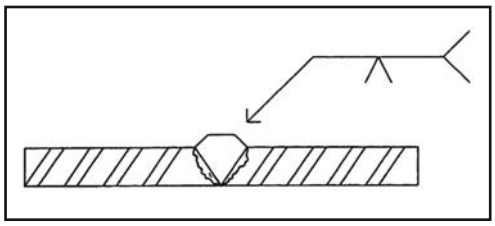

Figure 6-21
End view of V-groove weld

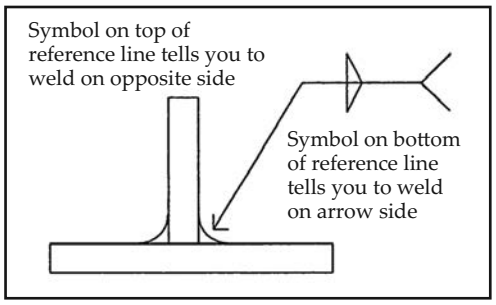

Figure 6-22
Two-sided weld

Welding Symbols

There are several types of welds, and blueprint symbols for all of them. Figure 6-19 is the basic arrow symbol that draftsmen use to show where a weld is required. They add other symbols to the arrow to indicate the type of weld to make, and how to finish it. In Figure 6-20 the arrow shows where a seam weld will join two pieces of flat iron.

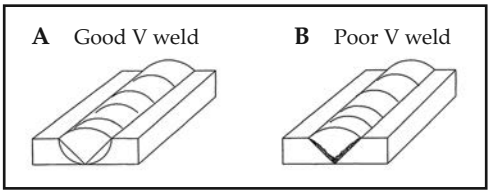

Figure 6-23
Weld examples

In Figure 6-21, the inverted V under the arrow specifies a V-groove continuous weld at the seam where the arrow points. Because the V is on the bottom of the arrow, it means you only weld on one side of the two pieces of metal — the side the arrow points to. To indicate a weld on both sides, you'll see a mirror image of the welding symbol on the top of the arrow, as shown in Figure 6-22. Certain welds *can't* be double-sided welds. Plug, slot, spot and seam welds are all one-sided welds. I'll explain more about those later in the chapter.

Welding Basics

You make a V weld by first grinding a bevel on the edges of both pieces of metal where they're going to butt together. Then you heat the groove with the welding torch, and touch the *filler* to the groove. If you clean and grind the metal properly, use the right filler and *flux*, and heat the metal to the right temperature, your finished weld looks like Figure 6-23 A.

If you don't thoroughly clean the metal, or if you use the wrong flux, your weld joint will fail. In Figure 6-23 B, the dark areas between the metal and the weld represent dirt, oil, oxides and flux. This metal is *not* securely welded together.

Grind or wire brush all metal before you attempt to weld it. Use a degreaser to remove oil. If the metal is rusted, clean it in a solution of nitric acid or other commercially-available rust remover — a process known as *pickling*.

Flux

Welding flux can be separate from, or incorporated into, the filler rod. When heated, it forms an inert gas barrier around the weld joint. This barrier prevents airborne oxygen from entering the weld and combining with the heated metal to form oxides. Oxides are salts, and salts inhibit good welds because they prevent the heated metals from flowing together. Flux also acts as a cleaner, but it's not a substitute for thoroughly cleaning the metal before you weld it.

Filler

The filler rod provides the metal to replace the material you grind off to make the weld seam. Always use a filler made from the same material as the metal you're welding, or you won't get a strong weld joint.

The diameter of the welding rod is also a factor in making a good weld. If the rod is too thin, you won't get enough filler into the joint. A rod that's too thick may not melt, and will probably give you a sloppy looking joint. As a rule of thumb, begin with 1/8-inch-diameter welding rod. If the weld doesn't fill the void properly, select a larger size. If the weld mounds excessively, use a smaller diameter rod.

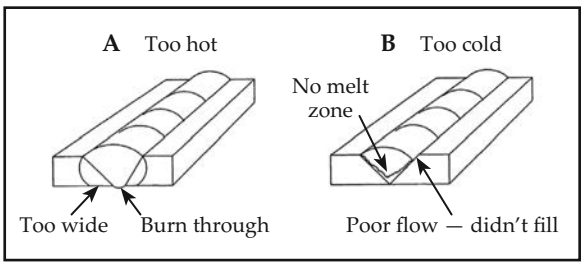

Figure 6-24
Improper welding temperature

The wrong welding tip or heat range affects the quality of your weld joint. If the heat is too low, the welding rod doesn't properly melt into the surface. Too much heat, and your weld may burn through, as shown in Figure 6-24 A.

With the correct temperature, the metal you're welding starts to liquefy. When you touch it with the welding rod, the rod melts. *Don't* apply the torch flame to the rod; apply it only to the metal you're welding. Here's why: If you heat the rod, the rod will melt and drip into the joint. But if the joint isn't hot enough, the rod metal will cool too quickly and not form a bond. This *lack of penetration* produces a *cold weld.* Figure 6-24 B illustrates this.

Here's a chart that shows the melting point for several commonly-used metals.

Metal Type	Fahrenheit	Centigrade
Tin	450	232
Lead	621	327
Zinc	786	419
Aluminum	1220	660
Silver	1762	961
Copper	1981	1083
Nickel	2647	1453
Iron	2795	1535

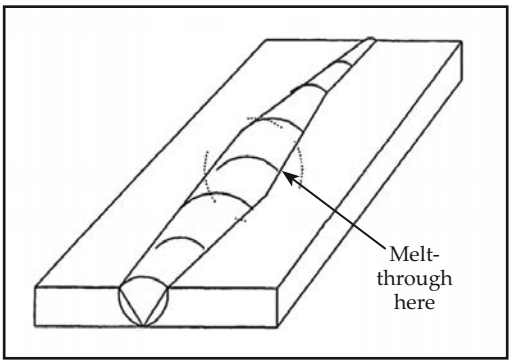

Figure 6-25
Uneven grinding

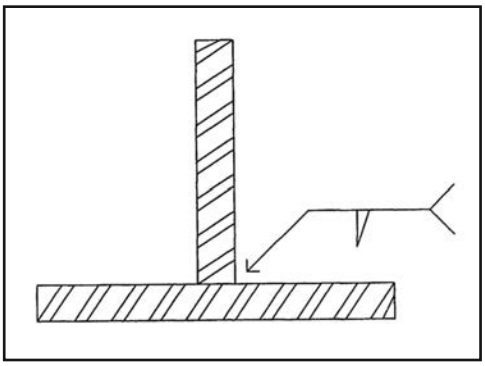

Figure 6-26
Symbol for fillet weld

Grinding

The angle at which you grind the two pieces of metal is important. Keep it between 15 and 22½ degrees, so the full angle formed by the two pieces is between 30 and 45 degrees. If the V is too steep, you won't get enough heat into the bottom of the weld. The filler rod won't melt all the way into the joint, allowing air pockets to form. That makes a weak weld.

A groove that's too shallow is just as bad. Your material will melt properly, but you'll use much more welding rod. That also contributes to a weak joint, because when the groove is too shallow, the weld is never as strong as the base material. Ideally, you'll replace as little of the metal as possible with welding rod.

If the grind isn't straight along its full length you get *melt-through* wherever the mating pieces don't match. You'll have twice as much finishing work to do because you have to finish both sides and, again, the weld will be weak. Figure 6-25 shows the results of uneven grinding.

Welds

There are many types of welds, depending on what you're trying to accomplish. I'm going to talk about the ones you'll be using most often.

The Fillet Weld — Test Your Skill

Cut two pieces of 12 gauge sheet metal 2 inches wide and 6 inches long. Weld the two pieces together into a T, using a fillet weld. The blueprint symbol for a fillet weld is a right triangle suspended from the arrow with the right angle on the left and the slant to the right. See Figure 6-26.

You can buy triangular fillet rods for this, but they're hard to find, and round rods are easier to use. Your weld should form triangles about ⅛-inch high and wide on each side of the T. The fillet symbol on both sides of the arrow indicates that you weld both sides of the joint.

When you've finished the weld, clamp the upside-down T to something solid and strike the top of the upright part with a large hammer. Give it a

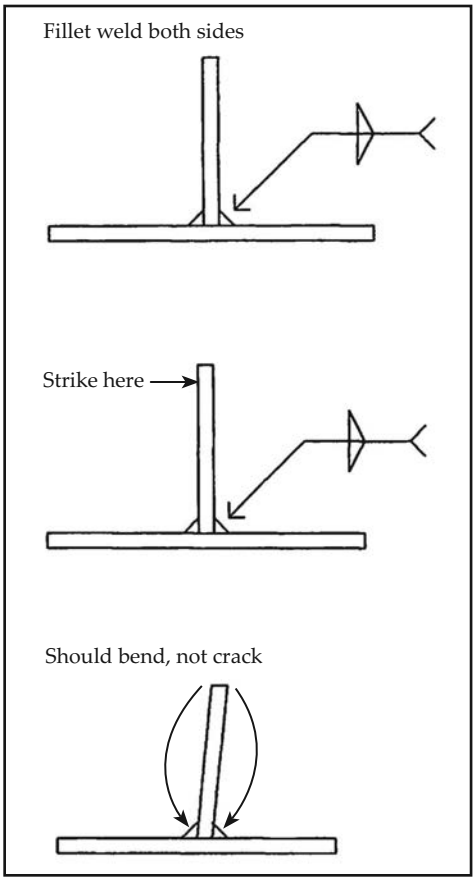

Figure 6-27
Test of good weld joint

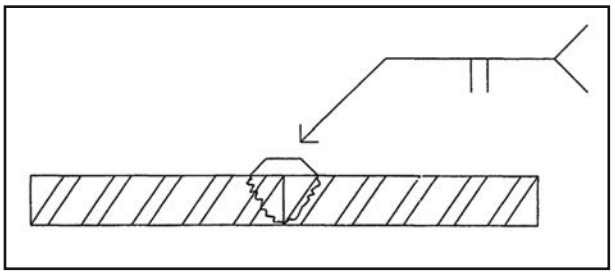

Figure 6-28
End view of square groove butt joint

good blow or two. The T should bend, but not snap off. (See Figure 6-27.) You shouldn't see any hairline cracks on either side of the weld.

Now, saw the T into 1-inch-long sections. Inspect the cut weld joints for flux, dirt, cold welds, and cracks. Keep practicing. Repeat this test until your welds are clean and secure.

The Square Groove Weld

The symbol for a square groove butt weld is two parallel lines perpendicular to the arrow (Figure 6-28). This weld isn't as simple as it looks. It's hard to heat the seam adequately to get good penetration. You can use it on 16 gauge or thinner metal, but I don't recommend it for thicker welds.

Sheet metal thickness is measured in gauge number. The higher the number, the thinner the metal. Figure 6-29 is a chart that translates gauge to thickness. It's hard to weld

Actual size			Actual size		
Gauge number	Weight per SF (pounds)	Thickness, approximate (inches)	Gauge number	Weight per SF (pounds)	Thickness, approximate (inches)
7	7.5	3/16	19	1.75	7/16
8	6.9	11/64	20	1.5	3/8
9	6.25	5/32	21	1.4	11/32
10	5.6	9/64	22	1.25	1/32
11	5.0	1/8	23	1.12	9/32
12	4.4	7/64	24	1.0	1/4
13	3.75	3/32	25	.87	7/32
14	3.12	5/64	26	.75	3/16
15	2.8	9/128	27	.68	11/64
16	2.5	1/16	28	.62	5/32
17	2.25	9/16	29	.56	9/64
18	2.0	1/2	30	.50	1/8

Figure 6-29
Sheet metal thickness

thinner metals, because they melt too easily. Never try to weld anything thinner than 24 gauge. Use glue, solder, brazing, or mechanical fasteners instead. I'll cover these later in this chapter.

Use a *backer plate* when you weld thin metal: copper at least a half inch thick, a 12 gauge sheet of stainless steel, or a specially-formulated backer plate from your welding supply source. The backer plate prevents melt-through, as illustrated in Figure 6-30.

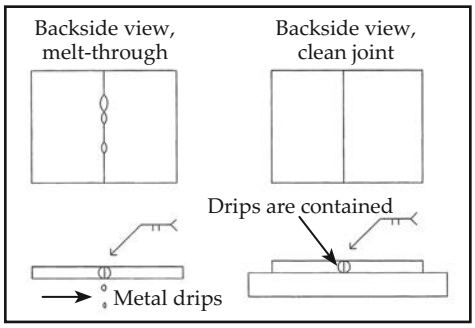

Figure 6-30
Use a backer plate to prevent melt-through

Remember that metal liquefies at welding temperatures. The backer plate keeps the hot metal from dripping all over the place until it cools and becomes solid again.

Because thin metals warp easily when heated, clamp them to a solid non-combustible surface when you weld them. Clamps are a must for welding tubing if you want to keep it straight. When you heat tubing to welding temperatures, it may warp for several feet if it's not clamped in place.

Slot Welds and Plug Welds

Slot and plug welds help prevent melt-through and warping because you're only heating small areas of the metal. The welding symbol for both of these is a rectangle. The difference between the two is shown on the fabrication drawings. You start a plug weld by drilling a hole through one of the pieces of metal being joined. Then clamp the two pieces together, and make the weld through the hole, filling it with filler rod. You punch the slot for the slot weld, instead of drilling it. The slot weld is the stronger of the two, but the plug weld is easier to do. Figure 6-31 shows both of these.

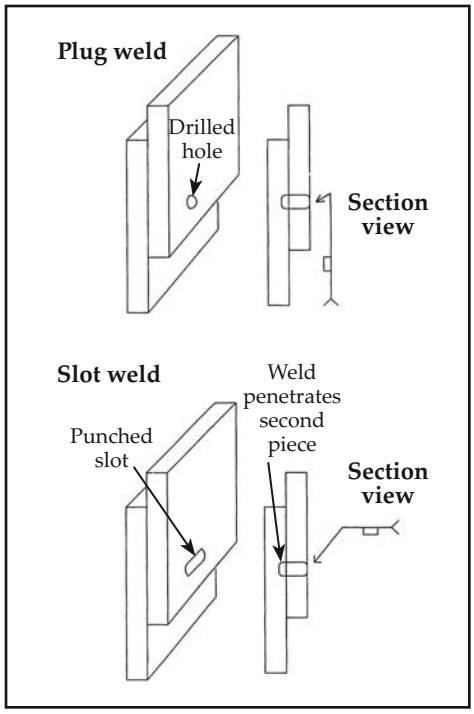

Figure 6-31
Plug and slot welds

Other Welds

Figure 6-32 shows the symbols and shapes for some alternatives to the V groove weld, for those of you who don't like

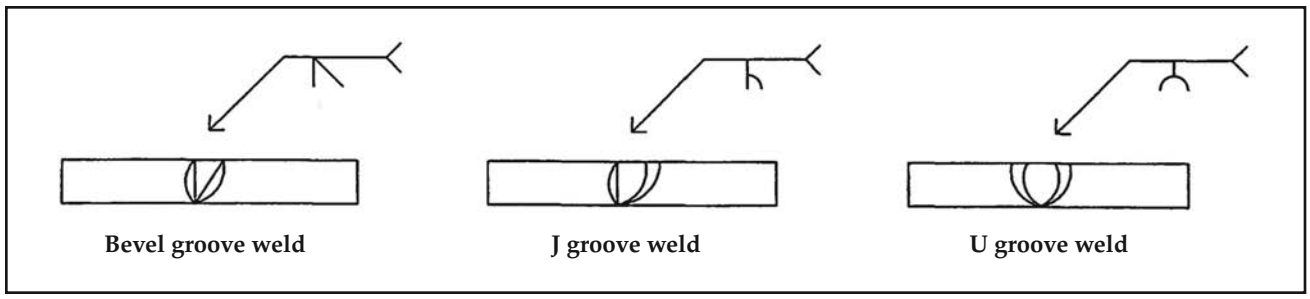

Figure 6-32
Alternatives to the V groove

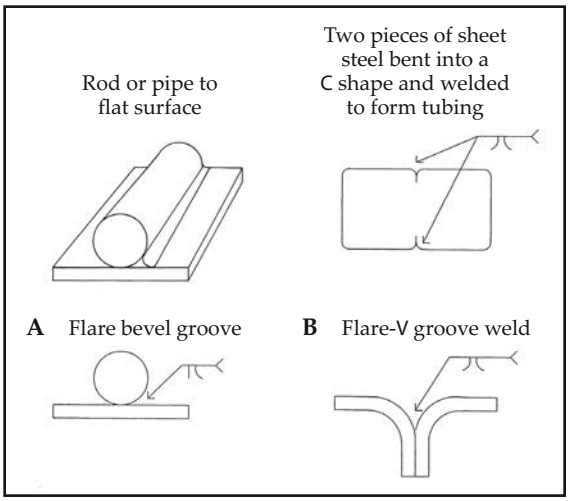

Figure 6-33
Flare groove welds

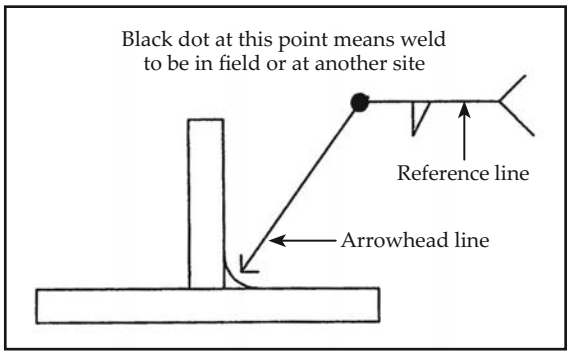

Figure 6-34
Onsite weld symbol

to do a lot of grinding. These require less grinding because you only grind one side of the weld joint.

Notice that you *do* have to grind both sides of the U groove if you start with square-edged material. But if the cut was made with a cutting torch, the result is a rounded edge that doesn't require grinding.

Figure 6-33 shows two kinds of flare groove welds. You can use the flare bevel when you add ornamentation to an otherwise dull-looking fence or railing. Use the flare-V to make tubing from flat sheet metal. Notice in Figure 6-33 B that you're allowed to extend two arrows from the same reference line on your drawings.

The symbol for welds that you make on the job-site is a solid dot at the intersection of the reference line and the arrowhead line of the arrow symbol. You can see this in Figure 6-34.

If you're welding pipe or tubing to a flat surface and want the weld to go all around, show a circle at the junction of the reference line and the arrowhead line, like the one in Figure 6-35.

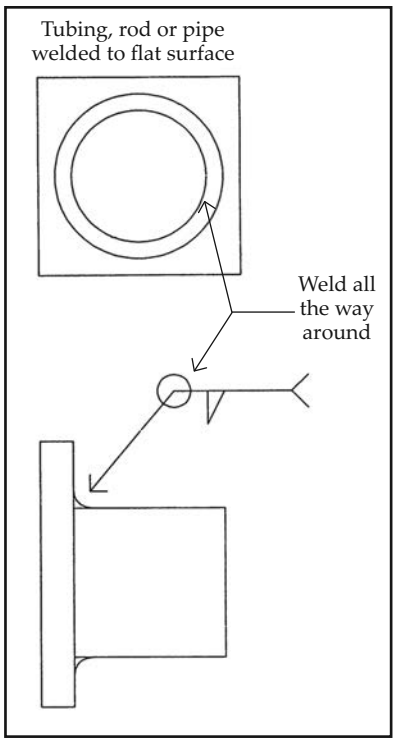

Figure 6-35
Weld all the way around

When You Want *Melt-Through*

You can prevent melt-through with a backer plate, but sometimes you *want* it to melt through. It makes a stronger joint, and it hides the seam on the back side of the two pieces of metal you're welding together. You do the primary weld on one side, then do a smaller weld on the opposite side. The symbol is an open half-moon. If you only make the primary weld and just let the welding material fill to the opposite side, the symbol is a filled half moon. Both of these are demonstrated in Figure 6-36.

Figure 6-37 shows how the thickness of the back or melt-through weld is indicated. You can use either fractions or decimals, but be sure you're consistent in your use of one or the other. Most contractors prefer fractions.

This figure also shows how to describe weld sizes and distances. The illustration is of the test T joint we discussed earlier. The symbols call for fillet welds 1 inch long, 3 inches apart on center, and 1/8 inch high. Notice the positioning of the numbers. The width is first, then the height, both on the left side of the welding symbol. The weld length and center-to-center spacing, or *pitch*, appear on the right side of the symbol.

I used different numbers in the example for clarity, but when you make a fillet weld, the width and height need not be greater than the thickness of the metal. If you use more, it doesn't add strength. It only wastes welding rod, and takes more time.

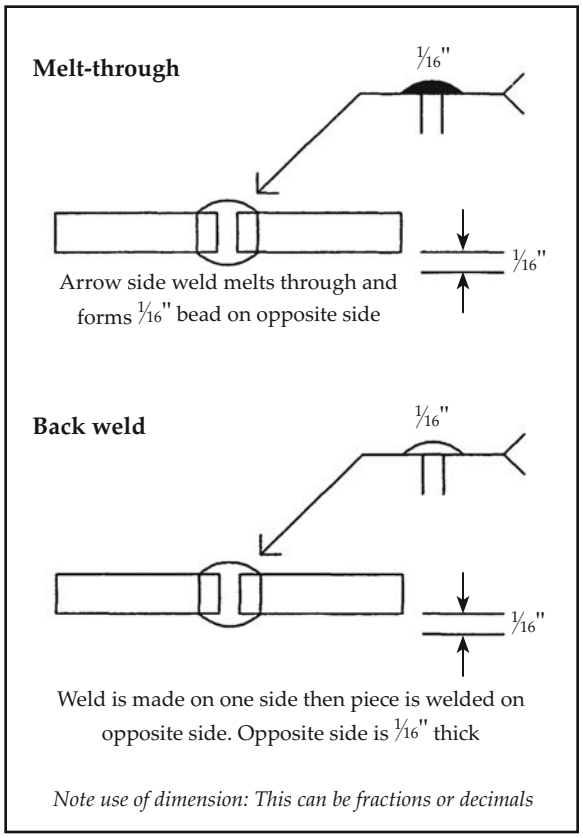

Figure 6-36
Weld on both sides

Specifying Weld Finishes

Figure 6-38 shows how to call out weld finishes on blueprints. You draw a line, and put the appropriate letter next to or under the weld type symbol. G stands for grinding, M calls for machining, and C means chipping. Grinding is most commonly used for fence or field work. Grinding is done with an abrasive wheel, while machining is done on a lath

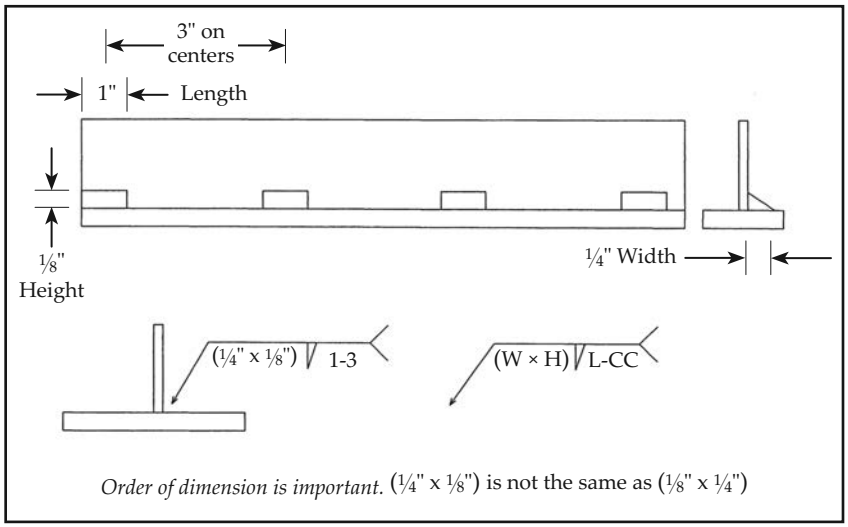

Figure 6-37
How to specify weld size and spacing

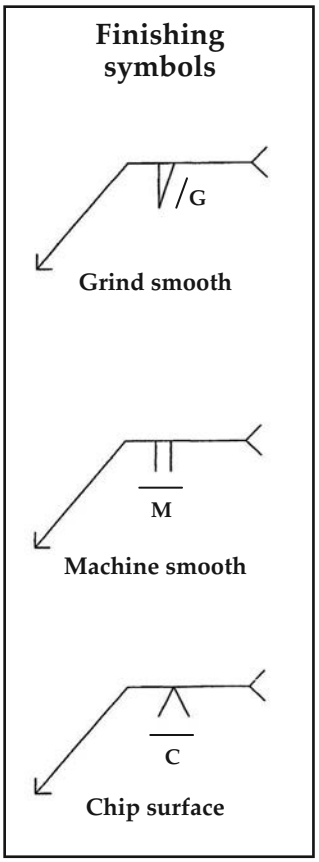

Figure 6-38
Weld finish callouts

or flat-bed milling machine with cutting tools. Chipping is removing excess material with a chipper, or by hand with a hammer and chisel.

Gas Welding

You're not likely to do much arc or resistance welding as a fence contractor. But you will use a gas welding technique known as the *oxy-acetylene* method. Here's the equipment you'll need:

- two gas tanks, one filled with oxygen and the other filled with a highly flammable gas, acetylene — the oxygen tank is orange or green, the acetylene tank, red
- two regulator valves each with two gauges — one is the high pressure gauge and shows you the gas pressure remaining in the tank; the second is a low pressure gauge and shows you the gas pressure entering the hoses
- a dual-section hose, about 15 feet long, with one side green and one side red
- a handle or tip holder that contains two small adjustable valves — these valves regulate the amount of gases reaching the tip
- a couple of welding tips, a brazing tip and a cutting tip — the welding tips are cone-shaped and have one outlet; the brazing tip is similar but its outlet is larger; the cutting tip has three or four outlets
- a pair of heat-resistant gloves
- a face shield and a U/V dark-glass eye shield
- a flint sparker
- wrenches for tightening the valve fittings

Most acetylene tanks have a "collar" around the base of the valve with the name of the company they belong to, as well as the serial number of the tank. Different suppliers use different colored collars: red, yellow, or green, just to mention a few. To avoid accidents, tank valves are manufactured so that an acetylene line can't be threaded into an oxygen tank, and an oxygen link can't be threaded into an acetylene tank.

Before you begin welding, secure the tanks so they can't be knocked over. Use a specially-designed cart, chain them to a wall or post, or place them in some type of stationary enclosure. That's important for two reasons:

1. The valve and gauge assemblies are expensive … *very* expensive.
2. If you knock over a tank and the main valve breaks, you'll have an unguided missile on your hands. These tanks are pressurized to several thousand pounds and will take off like a rocket, destroying anything, or anyone, in their path.

Once the tanks are secure, screw on the regulator valve assemblies and tighten them with a wrench. Now screw on the hose assembly and tighten. These should all be tight

enough so they don't leak, but be careful you don't strip the threads. Connect the green hose to the oxygen, and the red or orange hose to the acetylene. You probably can't reverse those. Most have clockwise threads on the oxygen, counter-clockwise threads on the gas. Screw on the tip handle assembly and tighten it. Select a tip and fasten it to this assembly.

Important: Before you fire up your welding outfit, be sure there are no combustible materials within 10 feet of the work area. That means no dry grass or leaves, no paper, wood, or trash. Wet the area down with a water hose if you have to.

The materials you're going to weld should be all ready. That means they're ground to the proper angle, degreased, and wire brushed free of all rust and scale. They should also be free of paint. Paint burns at welding temperatures, and most paint gives off toxic fumes when it burns. Some of these fumes are deadly.

Put on your welding mask and gloves, and get your sparker (igniter) out. You can work with your gloves on, if they're pliable enough. Follow these steps:

1. Turn off the small valves on the welding tip holder.
2. Turn on the main valves to the two tanks. You should be getting 2,000 to 3,000 psi (pounds per square inch) pressure readings on one gauge of each tank.
3. Turn on the tank regulator valves, on the gauge packs. Set the pressures for 20 psi. (There must be pressure to the valves and meters before you can adjust them.)
4. Turn on the small valve on the tip holder for the acetylene gas. *Do not turn the oxygen on yet.*
5. Open the gas valve about ¼ to ½ turn.
6. Strike a spark with the igniter about 3 inches from the tip nozzle. The gas should ignite and burn with an orange flame. You'll see some black smoke. Use the small valve to set the flame to about 6 to 8 inches.
7. Very slowly turn on the small valve for the oxygen. The flame should start to get shorter in length and turn from orange to red to blue. You'll start to hear a hissing sound: this is normal. If you get a loud pop, don't panic, just turn off the small valves and start again. The pop is caused by adding too much oxygen too fast.
8. Once you get it right, you'll have a blue or blue-white flame about 2 to 3 inches long. Put your eye protection on and bring the flame to within 2 inches of the items you're welding. Don't get too close as this will smother the flame and it will go out.

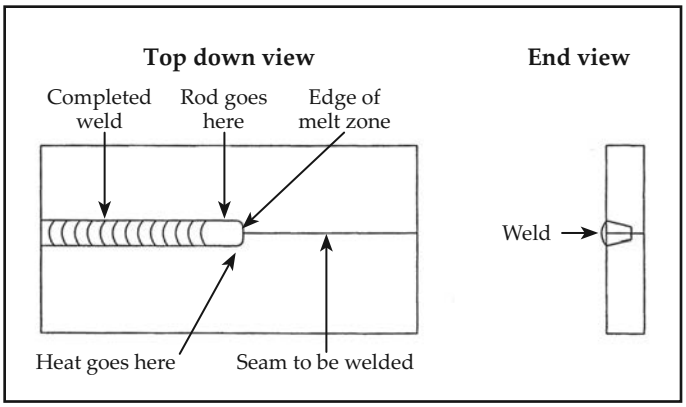

Figure 6-39
Forming a quality weld joint

9. Heat the materials evenly where you're going to make the weld. The metal should start to glow cherry red and then start to become liquid. When the metal liquefies, apply the welding rod to the joint. The rod should start to melt and puddle. There will be some smoke from the flux. There may be sparks flying. This is normal.
10. Work the heat and the welding rod along the seam you're welding. You should have a series of overlapping puddles. Figure 6-39 shows a weld joint that was done correctly.

If you have bubbles, or breaks in the weld seam, it's probably because the metal wasn't cleaned properly. Turn everything off and try again.

Once you've completed the welding and everything has cooled off, it's time to finish the job. Use a wire brush to remove excess carbon and flux from the weld area.

Now use a grinder or power drill with a sanding wheel attached. Begin with No. 80 grit to grind off the excess weld material. Change to No. 100, No. 120, No. 150, and finally, No. 180 grit. Your weld will be flat and unnoticeable. Now it's time to prime and paint.

Here's some practical advice. Suppose you have two U channels to weld together to form a handrail or post. They're six feet long, so you'll have to weld two seams for a total of 12 feet. A good welder can do ½ to one inch of seam weld per minute. That means almost 2½ hours of welding, and another hour to grind. Is there a faster way? Yes, there is.

You really don't need full strength the full length of the seam. You can do a series of one-inch welds every six inches. Now you only have 26 one-inch welds, about a half hour's work, and another 10 minutes of grinding. That's quite a saving in labor. But maybe you're not satisfied with the way the job *looks.*

Soldering and Brazing

You can fill the voids between the welds on the seam with solder. Solder melts at about 860 degrees. It flows like water and leaves an almost finished surface that requires a minimum of grinding. You can apply solder quickly, since you don't have to heat the base metal to its liquid state.

You should be able to solder with your welding torch at a rate of about a foot a minute. Use a solder with a paste soldering flux. Clean up is with water.

Brazing is another process you can use. It's faster than welding, but slower than soldering. The temperature you must reach, and the strength of the finished product is also between the two other methods. The procedure is the same. You heat the metal so when you touch the joint with the brazing rod, the rod melts and flows into the joint. The difference is that a brazing rod is made from an alloy of copper, brass, and bronze — not the same material as the metal you're welding.

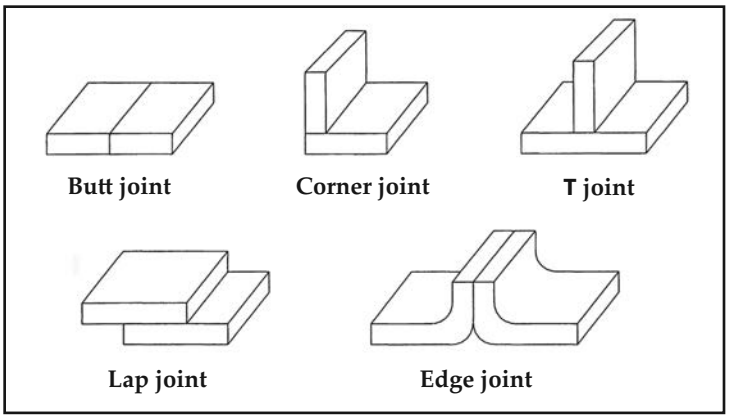

Figure 6-40
Five basic welding joints

Welding melts the material being welded. The material merges and keeps its original characteristics. Brazing and soldering don't combine with the host material. The strength of a welded joint is as good as the metal itself. The strength of a brazed or soldered joint relies on the strength of the brazing alloy or solder. That's why brazing and soldering are used more as a filler than for structural reasons.

Figure 6-40 illustrates five kinds of weld joints. Learn to do top-quality welds on each of them, and you'll be able to handle anything that comes your way in the metal fencing business.

Spot, Resistance, and Seam Welding

The joints and symbols we've discussed so far apply to gas and arc welding. There's also *spot* (or projection), *resistance*, and *seam* welding.

Welding With a GTAW

You need a GTAW welding unit for spot welding. GTAW stands for Gas Tungsten Arc Welder. These electrically-powered welders are most commonly used in the factory, though some can be powered by a gasoline-driven electrical generator on the jobsite. They make a very quick, clean weld joint that requires minimum, if any, finishing.

GTAW welders operate in either *contact* or *arc* mode. In contact mode, you tightly clamp the two pieces of metal to be joined, and press the tungsten rod tip against the metal where you want the weld. Spray the weld area with nitrogen, helium, or argon to prevent oxidation, and turn on the switch. Presto — a spot weld. The symbol is a circle, with the letters "GTAW" placed as shown at the back of the arrow in Figure 6-41. Use a GTAW welder in the arc mode for seam welding. For this type of weld, you hold the tungsten tip about 1/4 inch away from the weld surface. The arc generated by the tip melts the metal, and it flows together to create the seam joint. Figure 6-42 shows how to draw plans for a seam weld.

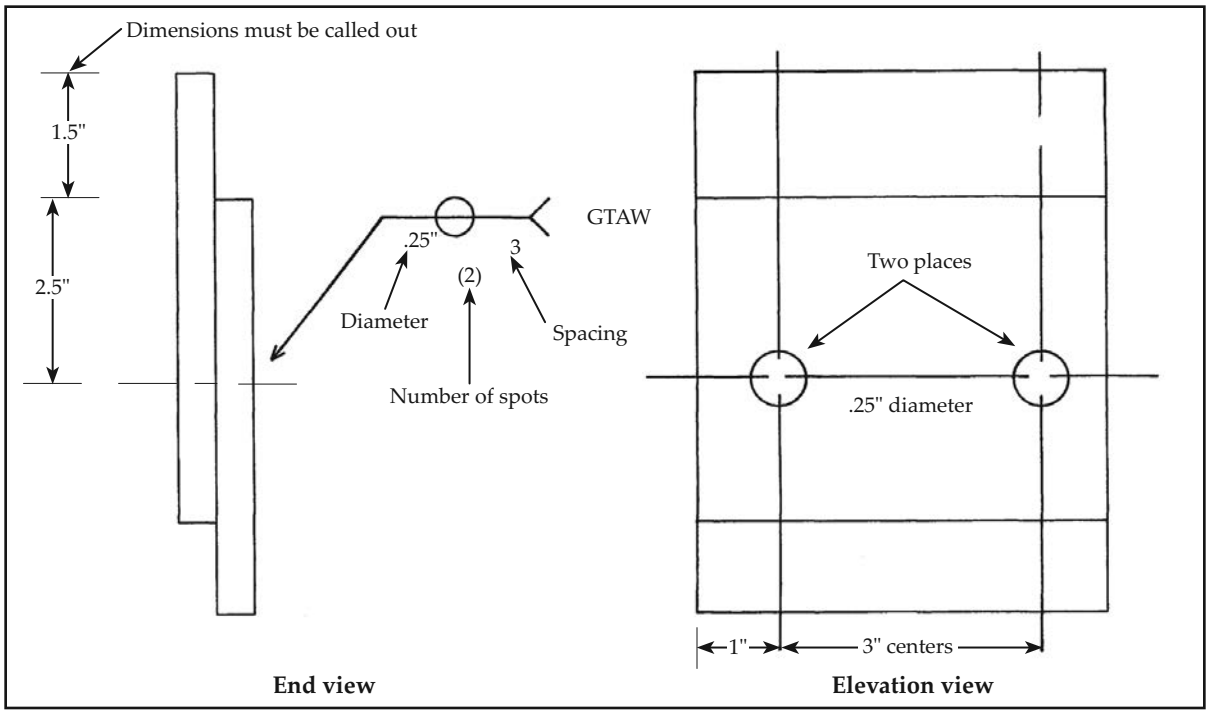

Figure 6-41
Spot welds

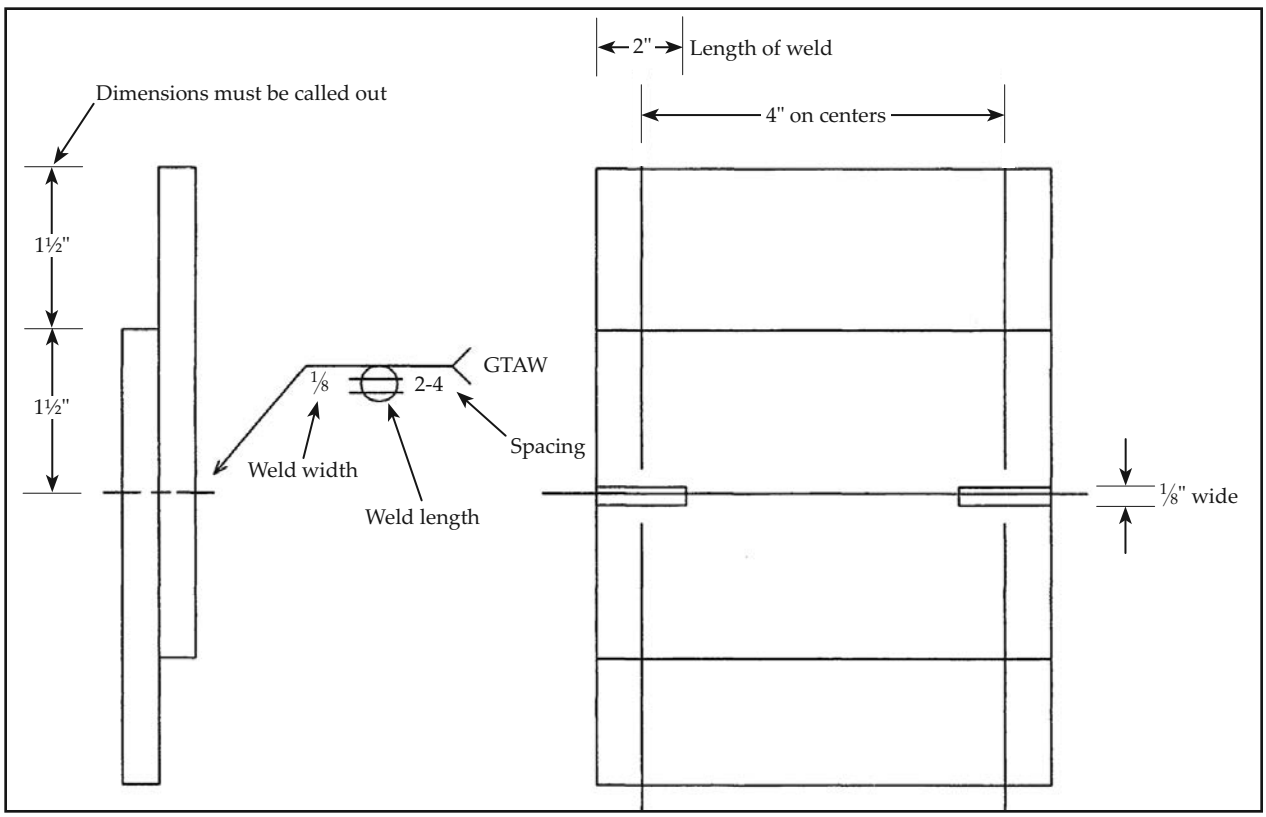

Figure 6-42
Seam weld

In the factory, seam joints are created differently. An electrical current passes through a wheel that contacts the metal as shown in Figure 6-43. This is called *resistance welding.* It's the method used to manufacture most square and rectangular tubing.

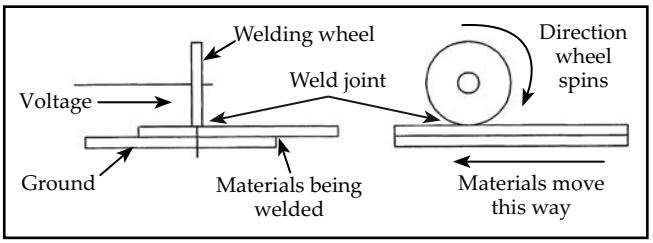

Figure 6-43
Resistance seam welding

When you use a GTAW in contact mode, you don't use a filler rod. But it may be necessary in arc mode when the heat of the arc dissipates some of the base metal, leaving a void.

General Information

Your work will probably be limited to steel and iron. Don't even attempt to weld stainless steel or aluminum, unless you're already an expert. These metals take a lot of skill and special techniques. Pass these jobs along to a subcontractor; but check them out first. Lots of people claim they can weld stainless and aluminum, but when it comes down to doing a quality job, they can *not.*

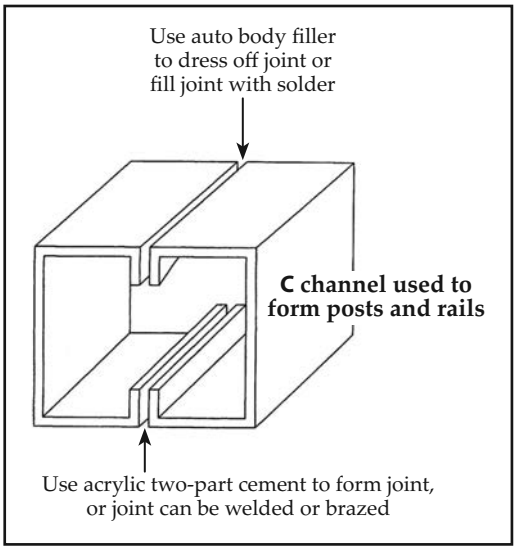

Figure 6-44
Alternate methods of joining and finishing

- for degreaser, try Gunk™, available at auto parts stores — it does a good job and cleans up with water
- for filling a long seam, try Bondo™, an auto body filler
- for joining seams that have a hidden return bend, such as two C channels, try Super Glue™ in its gel form; you can also get industrial acrylic two-part metal glues that hold like iron; just paint them on the pieces you want to join, then clamp the parts together for a minute or two (see Figure 6-44)
- use a drill-mounted wire brush to prepare metal for welding

If you plan to manufacture metal fences, you'll need an arc welder, a cut-off saw, a belt sander, and an alignment jig. You need the cut-off saw to cut pipe and tubing accurately, either square or at a specific angle. You use a sander to finish the edges of the cut tubing before you weld it. The alignment jig holds everything in place while you're working on it. When metal is heated for welding, it warps and bends very easily.

You'll also need an exhausted cleaning tank which is approved by federal, state, and local authorities. Raw steel sheets, pipe, and tubing are dirty. They're covered with oil, dirt, grease, and scale. You have to remove all these before

you weld or paint the material. You can clean steel in a dip tank filled with nitric acid or other acid. But this is dangerous. Unless you're experienced, leave it to the experts.

You'll need an *electrostatic spray booth* to paint fences in your shop. Electrostatic attraction draws paint evenly around the fence or rail, leaving a smooth, even paint job. You spray the powder onto the fence and then sweep up and reuse any excess that doesn't stick to the metal surface. Next you bake the coated fence section in a large oven until the paint powder melts into a liquid. The expense of all this equipment keeps most fence contractors from getting into the prefab metal fence business.

If you want to learn more about welding, many trade schools offer courses. Try your public school system first. Commercial welding schools also offer classes, but the cost will be much higher.

This page left intentionally blank

Chapter 7

Finishes

THIS CHAPTER COVERS THE various coatings you'll use on fences and walls, the best ways to apply them, and tips on how to do the job faster and easier. Many of these coatings aren't paints at all (even though they're painted on); they're chemical compounds formulated to do much more than just change the color.

The way you build a wall or fence has a lot to do with how durable and long-lasting the coating will be. And if you don't apply the correct coating, *in the right way*, your customer will have a fence coating that peels, flakes, or even changes color. This chapter details what you need to do to prevent premature coating failure.

Interior painting is a good off-season occupation for fence contractors where weather makes working outdoors impossible for part of the year. If this describes your situation, you'll already have most of the equipment you need, so you might as well use it. If you want more information on painting in general, order a copy of *Painter's Handbook* from Craftsman Book Company, http://craftsman-book.com.

Protective Coatings Defined

The main reason for coating any surface is to protect it, so that's your first concern when selecting a coating. The second purpose is to make it look better.

Take a look at the features in the sidebar. Fortunately, most of today's commercially available coatings do most of these things. But be aware: *Not all of them do everything*. Some may do one thing very well and others poorly; others may do everything on the list, but none of them well. Take time to talk to your local paint store — they generally know what's available, some of the newer technologies, and what will hold up to local conditions.

Since coating formulas vary, different coatings are needed for different applications. And if you're willing to pay more, chances are you'll get a better product. Paints and coatings are chemical blends of various elements and compounds. The type and quality of the ingredients determine the characteristics and cost of the coating. But don't reject local off-brand products out of hand. Even if they don't have big names, they may be formulated specifically for your area … and be less expensive, too.

Notice that I said less expensive; not *cheap.* Cheap coatings are generally just that — cheap. And most aren't formulated with the properties you need. You have to know that the coating will do what you need it to do. Read the labels and product literature to select the finish that's best for each job. I'll explain what to look for.

The coatings on fences and walls are classified as *exterior* coatings. Interior coatings aren't made to stand up to extremes of weather, rain, wind, and U/V radiation.

Tools and application methods depend on the type of surface. You'll use different coating materials for foundations, posts, block, brick, redwood, cedar, and other lumber. You may use several different types on the same fence or wall. You can apply coatings with a brush, a pad, a glove, a roller, or a spray outfit. Using the right tools makes the job easier and gives you the result you want.

Here are the things you need from a protective coating:

- it must stand up to everything it's exposed to
- the cost to buy and apply it must be reasonable, and it must last long enough to justify its cost
- you have to be able to remove it or apply additional coatings over it
- it must be flexible enough to expand and contract with the material under it
- it must penetrate and adhere to the surface it's applied to
- it must be hard enough to not scratch off, but soft enough to dent and not loosen, chip or peel off
- it must prevent water penetration into the surface under it, yet breathe enough to let water vapor pass through it
- it must spread easily and form a mark-free coating
- it must dry fast enough to prevent dirt and insect entrapment, but not so fast that it won't spread easily and penetrate the surface
- it should be washable with soap and water
- it should be resistant to most airborne chemicals
- it should resist the effects of ultraviolet *(U/V)* radiation, fading and discoloration
- it should allow you to easily clean your hands and tools with a solvent

Composition of Coatings

The base, called the *vehicle* (or *carrier*), is the liquid part of the coating that evaporates as the coating dries and cures. That can be oil/alkyd, water/latex, alcohol or petroleum. Some coatings even come in dry form, and you add the base. Cement paint is an example of this.

Clear coatings let you see the grain and other natural characteristics of the material being coated. They include shellac, urethane, varnish, poly, and epoxy. Semi-opaque coatings let some of the material show through, but still add color — stains and tinted clear coatings fit this description. Opaque coatings completely hide the coated material. Paint and petroleum or tar-based products are opaque.

Chemical formulations and silicon products allow coatings to repel water and insects. You can buy insect repellent and add it to most coatings; just pour in one ounce of repellent for each gallon of coating. Generally, water repellent is applied after the final color coat, but I've also had luck putting it on a few weeks before the paint.

Coatings are composed of the vehicle and the *pigments.* There are two types of pigments: *active* (or *prime*), and *inert*. Prime pigments are the ones that give coatings their color. Most of today's prime pigments are manmade; but years ago, they were natural, derived from plants, clays and mineral ores.

Inert pigments are added to give coatings qualities other than color. They're not dissolved in the vehicle, they're suspended in it. Some inert pigments, like ground walnut shells or sea shells, give coatings body or thickness. Minerals, metals and synthetic compounds can provide some special characteristics.

Additives are a group of pigments, generally liquid, that dissolve in the vehicle. Figure 7-1 is a list of coating characteristics and the additives that produce them.

Most of these pigments add some color to the coating. Pigments are added to the vehicle as a percentage of the vehicle's weight. Since inert pigments are in suspension and don't chemically combine with the vehicle, they can settle. When you buy the coating, you must put these pigments back into suspension. You do that by mixing, shaking, or *boxing* the coating. Boxing is pouring the coating from can to can several times.

If you have two cans of a certain coating, I recommend boxing, so all your material is a uniform color. Use a third can and pour half of each full can into it, then pour the remaining half of one can into the remaining half of the other. Repeat this eight to ten times. If pigment sticks to the bottom of a can, use one of the wooden paddles from the paint store to loosen the pigment.

Special additives can be used to condition the surface to be coated by removing oxidation and contamination. These additives are usually acids.

Quality	Inert pigment or additive
Abrasion resistance, strength	Clay, mica and talc
Algae and barnacle control	Tributyltin and copper compounds
Bacteria control	Teflon
Bleaching, waterproofing	Pentachlorophenol
Durability, weathering	Clay, calcium carbonate, mica, magnesium silicate and talc
Fire resistance	Nitrogen compounds
Heat resistance	Aluminum and bronze powders
Insect control	Cinerin, dieldrin, Paris green, and chlorpyrifos
Rapid drying time	Cobalt or manganese salts
Rust resistance	Red lead and zinc chromate
U/V protection	Carbon black

Figure 7-1
Paint additives and what they do

Catalysts make up another group of additives. They start a chemical reaction that develops the heat needed to cure and solidify the coating. Epoxies, polyesters and fiberglass are compounds that require catalysts to harden. Without a catalyst, these plastic materials won't cure. You can also add cobalt to control hardening time.

Surface Preparation

Even under the best of conditions, it's important to properly prepare the surface before you apply coatings:

- Clean the surface of all loose dirt, sawdust, oil and grease. If the surface is concrete and shows any efflorescence (that powdery substance), remove it.
- Let the surface age.
- Prepare and prime the surface.

In most cases, cleaning with soap and water and rinsing with water is enough. For difficult cleaning jobs, you may need acids or chemical cleaners. Stains on new lumber are usually inks and waxes used by the mill or lumberyard to mark the material. If they're not removed, they'll bleed through the top coating. Remove them by sanding or chemical cleaning.

Two Reasons Coatings Stick to a Surface

1. Electrostatic attraction makes paint stick the same way your socks stick to your shirts when they come out of the dryer. According to the laws of physics, opposite forces attract: Negatively-charged coatings are attracted to a positively-charged surface.
2. Surface roughness is another reason coatings stick. The coating gets into all the little nooks and crannies. When the coating hardens, the pigments wrap around all the bumps and depressions and hang on. Even a smooth surface like glass isn't really smooth if you look at it under a microscope. Most fence materials are very rough, and will provide a good gripping surface.

Older walls and fences will be dirty and muddy, and may have stains from chemical leaching, oxidation and rust. You'll want to clean these old fences and walls up very well before coating them. Figure 7-2 is a list of stain removers and their applications.

Most of the chemicals are inexpensive and widely available at paint and hardware stores. *They're all hazardous to use (some more than others), so wear rubber gloves and eye protection, and don't breathe the fumes.*

"Acids and bleaches get rid of stains but leave a residue that can attack and discolor or destroy many coatings."

The gas and fume stains mentioned in Figure 7-2 are chemical stains from airborne gases that industrial plants, and sometimes sewers, put out. These fumes make paint turn dark, metallic gray, or brown.

Tannic acid is a natural stain found in cedar and redwood. It reacts with many metals and coatings, forming dark brown or black stains underneath the metal. You need to use coatings specially formulated for cedar and redwood. Isolate the metal used for hinges, etc. from the lumber with rubber strips, caulk, or paint.

Don't omit the neutralizing step where it's recommended. Acids and bleaches get rid of stains but leave a residue that can attack and discolor or destroy many coatings. The residual effect lasts for months and, in some cases, even years. The neutralizer rinse turns the acids to a water-soluble salt that rinses off easily.

Avoiding Problems with Coatings

A good coating, applied the right way, can not only make a fence or wall last longer, but adds to its appearance. However, if there's anything forming a barrier between the coating and what it's covering, all this goes out the window.

Efflorescence

Water coming in through uncapped blocks on a block wall can cause extensive efflorescence, and a coating won't adhere to this powdery surface. Find the source of the moisture causing the efflorescence and correct it before applying

Stain	Remover and Process
Ink, crayon, wax	Use trichloroethylene, or xylene, or a solution of half alcohol and half water. Follow with a solution of half water and half household bleach if stain persists. Use Type A neutralizer (see below).
Dirt, mud, clay	Wash with household detergent and water, rinse with clear water.
Dry rot grease	Use household bleach, applied with a hand sprayer or spray bottle.
Oil, tar	Use xylene or toluene or mineral spirits. If there's a heavy accumulation, try one cup of lye crystals dissolved in a gallon of water. Follow with clear water rinse.
Rust	Mix four ounces of oxalic acid crystals in one gallon of water. Brush on, allow to sit for three to four days and rinse with clear water.
Efflorescence	Wash with muriatic acid, followed by its neutralizer (see below) and a clear water rinse. For mild stains, use one cup of acid to one gallon of water. Use a 50 percent solution for heavier stains. Use the acid full strength for very heavy stains.
Efflorescence on cultured stone	One part white household vinegar to five parts clear water.
Gas stains	Use 3 percent hydrogen peroxide (right out of the bottle), or 1 part bleach to 9 parts water, or 1 part muriatic acid to 19 parts water. Finish with a clear water rinse.
Fume stains	Add one pint household bleach to one gallon of water. Brush on, allow several hours to work, and then neutralize with Type A or B neutralizer. Rinse with clear water.
Welding flux remover	Six ounces of sodium carbonate (washing soda) or six ounces of sodium bicarbonate (baking soda) and one gallon of clear water.
Whitewash remover	Use a mixture of half hot water and half vinegar, or use 10 percent hydrochloric acid in place of the vinegar. Rinse with clear water and apply new whitewash while surface is still damp.
To make:	**Use:**
Glass cleaner	Mix one pint non-sudsing ammonia and one quart clear water.
To clean:	**Use:**
Aluminum siding	Two tablespoons of T.S.R. dissolved in one gallon of water. Hose siding first and wash from bottom to top. Finish with clear water rinse. T.S.R. is trisodium phosphate (sodium carbonate & sesquicarbonate).
Galvanized metal (and stainless steel)	Mix 1/4 cup household detergent with one gallon of water. Rinse with clear water and dry. Rub down with mineral spirits.
Rusted metal	Brush or sand off as much as possible then coat with phosphoric acid (Naval Jelly). Rinse well with clear water, towel dry, and immediately apply prime coat.
Plastic and Plexiglas	Use mild soap and water. Use no abrasives or powder-type cleaners. Kerosene or naphtha will work on heavy dirt and stains.
Stucco	One cup household laundry detergent to one gallon of water. Finish with clear water rinse. Allow to dry two to three days before coating.
Painted surfaces	Wipe with liquid sanding solution, available at most paint stores.
Ceramic tile	Sandblast lightly or use hydrofluoric acid to etch surface.
Neutralizers	
Bleach neutralizer (Type A)	One cup white vinegar and one quart of clear water.
Bleach neutralizer (Type B)	One cup borax and one quart clear water.
Muriatic acid neutralize	Mix 1 part ammonia with 9 parts water, or 1 part potassium hydroxide (lye) and 9 parts water. Follow with clear water rinse.
Tannic acid neutralizer	One quart denatured alcohol and one quart water.

Figure 7-2
Stain removers and their applications

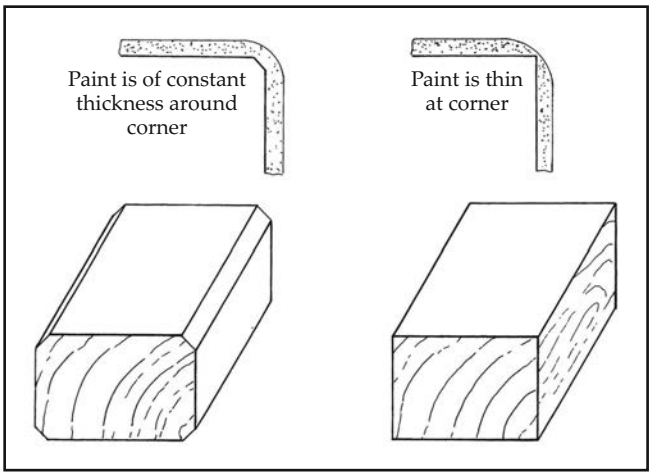

Figure 7-3
Paint thins at sharp corners

the coating. It's often caused by inadequate waterproofing behind the wall, which allows water penetration. But it can also be caused by openings in mortar joints, or inadequate moisture protection at the top of the wall. If this is the case, you can often fix this by tuck pointing the joints or sealing them with a latex concrete patching compound.

Remove the scale by wire brushing, scraping or power washing. Clean the wall with a trisodium phosphate (TSP) or muriatic acid solution, and then rinse with clean water. After the wall thoroughly dries, apply a latex coating.

Wood Rot

Dry rot (wood rot) is a fungus that consumes wood as it grows and keeps coatings, including just plain paint, from sticking to wood fences. You'll find dry rot is most common in areas where there's little direct sunlight and lots of moisture. You'll see it on the north side of homes, the shaded sides of fences, and where posts, rails and face boards join each other. If you discover it when you're coating a fence, correct the source of the problem to keep it from coming back.

First, replace any damaged lumber. You can use wood fillers to repair small areas of contaminated wood. Dig out the damaged material, and then spray the void with bleach and let it dry for an hour or two. Next, rinse with Type B bleach neutralizer, followed by clear water. Let it dry thoroughly, apply the wood filler, and coat.

Figure 7-3 shows a common problem. A coating was applied to a board with sharp corners. The coating is always thinnest at the corners, so that's where it failed first. To prevent this, use lumber that's been milled with flat or rounded corner surfaces. Coatings will stick better, and water will evaporate faster.

Oxidation

Oxidation is a natural process where atoms of oxygen combine with other substances. Some materials oxidize very quickly: Aluminum, for instance, begins to oxidize in seconds. Other materials oxidize very slowly, taking thousands of years. But all materials oxidize eventually.

Oxides are inert substances. Since inert substances don't combine readily with other substances, if you try to apply a coating over an oxide, it won't stick; it will peel right off. You have to sand the oxide off before you can successfully coat the surface.

But oxidation isn't always a problem. Since oxides are inert and don't combine with other elements, they're good protective coatings themselves. Once the surface of the material has oxidized, no further damage will occur. Many bridges and buildings are built of steel that's formulated to oxidize, or rust, which is a form of oxidation. Many aluminum structures are uncoated. The aluminum oxide protects them. In fact, aluminum is self-healing, since it oxidizes within seconds.

If you happen to have a customer who wants his aluminum bright and shiny, and wants it to stay that way, you'll need to coat it. Clean the oxide off the aluminum with chromic acid or a power wash. Sand out any pits with 1,000-grit sandpaper and brighten with 1,500-grit sandpaper. If mold or mildew is present, apply household bleach, followed by a clean water wash. As the final touch, apply clear coat to brighten the surface; you can use a product called Aluminum Jelly, manufactured by Loctite®.

Metal Railings

Pay attention to the weld joints on metal railings. These railings are hollow. Factory-finished metal railings are completely assembled and welded before they're painted, so the welds aren't easy to see. An incomplete weld joint lets water into the tubing so it can rust from the inside. Rust dissolves in water, so the rusty water will eventually leak out through the defective weld joint. When the water evaporates, the rust remains to stain the railing and the surface under it.

"An incomplete weld joint lets water into the tubing so it can rust from the inside."

If you discover poor welds, you can use auto body epoxy or body filler to patch them before you paint or repaint metal railings. Let the patch harden for a day or two before you paint.

Difficult Coating Jobs

Now let's talk about the more difficult types of materials that require a finish. With any project, always allow each application to dry thoroughly prior to applying the next coat.

Pressure-Treated Lumber

Most pressure-treated lumber is treated with CCA (chromated copper arsenate). Allow the lumber to weather for a few months before you paint it.

Clean any mold, mildew or algae with a diluted chlorine water solution and a stiff bristle brush. Apply an acrylic latex primer coat, followed by a coat of latex paint.

Cedar

For cedar, apply a water repellent, then a water-borne stain-blocking-based primer or alkyd-based primer coat to prevent tannin bleed. Paint the wood with an acrylic paint, or stain it with an acrylic solid color stain.

Redwood

Redwood contains tannin, so my advice is to not paint it. Oil treatments attract dirt and are susceptible to mildew. Varnishes and polyurethanes crack and peel, which is time consuming and expensive to repair.

Galvanized Metal

Clean galvanized metal with household vinegar. Use a power washer to remove any surface debris. To get rid of mildew, wash with a solution of water, chlorinated bleach and TSP. Remove rust with a stiff wire brush. Apply a galvanized-metal or acrylic primer, followed by a coat of acrylic paint. In hot, dry climates where the metal surface is exposed to direct sunlight, apply an acrylic urethane of a silicone-based coating. In moist, shaded areas, use an alphatic urethane. I recommend applying two coats.

Vinyl

Clean the surface with warm, soapy water, and then rinse with clean water. Use bleach to remove mildew. For normal surfaces, use latex paint. If the surface is slick, apply a bonding primer prior to the latex coat.

Plastic

To paint plastic panels, clean the surface with a warm soapy water solution, and then rinse with clean water. Spray with two coats of a flexible acrylic primer, followed by three coats of acrylic paint.

Glass

Glass paints come in opaque or transparent colors. Opaque paint is used to block sunlight or provide privacy. Transparent paint allows light to pass through. One way to make an opaque paint is to mix water, vinegar and gum arabic (vinegar trace paint). Gum arabic, a powder that is mixed with water

or alcohol, helps the paint adhere to the glass. Wet the glass before applying the paint. A paint easier to work with, but more transparent, is matt paint, which uses a base of gum arabic and water or vinegar. Some paints require an undercoat and an overcoat, while others don't, so follow the manufacturer's recommendations.

Clean the glass with rubbing alcohol or glass cleaner. Use a sponge to apply the paint. To spray paint glass, etch the glass surface with 80-grit sandpaper, then clean with a glass cleaner. Prime the surface, and then spray paint the glass. More than one coat might be required.

Don't Paint Too Soon

Newly-built fences and walls are too "young" to paint or coat. They need to age and weather before they'll accept coating materials. That presents a problem for you, the fence contractor. Time is money, and you want to complete your jobs as quickly as you can. But you might get into trouble by doing so.

The trees that produce the lumber drink a lot of water in their lives. The salts and minerals in the water are trapped within the lumber, and leach out with age. If you paint newly-cut lumber, the salts and minerals will attack your paint from the inside out. Lumber also contains oils that prevent new paint and finishes from adhering properly.

So, how do you prevent the problems that come up when you paint raw wood? There are three ways:

1. Buy the materials in advance and store them outdoors for several months.
2. Build the fence, and then wait several months before you paint it.
3. Buy unseasoned lumber and age it artificially.

The best solution, from a painting standpoint, is the first one. But for a contractor, that's not always practical. And nobody wants a job left unfinished for several months, especially your customer. So consider the third alternative. Natural aging or weathering lets the pores of the lumber open so the oils and water can evaporate. Rain and morning dew help wash away the salts and minerals and open up the pores. You can speed up the process by mist-spraying the lumber with a hose several times a day for a week or two. Allow the lumber to dry between wettings for this process to be effective.

You should also age brick, block and concrete before you coat them. Manufacturers use a mold release to make the blocks come out of the molds more easily. If it stays on the masonry, it can keep the coating from adhering. It may even react chemically with the coating, causing color changes and premature failure. Most clay and concrete also contains traces of salts and minerals, which

Material	Natural weathering time	Artificial aging time
Wood siding	90 days	15 days
Treated lumber	90 days	15 days
Trim lumber	90 days	15 days
Wood shingles	180 days	90 days
Cedar lumber	90 days	30 days
Redwood lumber	90 days	30 days
Plywood	90 days	30 days
Stucco	30 days	30 days
Cement	360 days	90 days
Cement block	30 days	15 days
Masonry	30 days	15 days
Brick	360 days	90 days
Galvanized metal	30 days	immediately
White rust metals	180 days	same

Figure 7-4
Weathering times

must be removed. Again, the best thing is to let the material age before you coat it. Once again, you can speed this up by hosing it down several times a day, allowing the surface to dry between each wetting.

For galvanized metals, use the cleaning process shown in Figure 7-2 to remove the oils used in the manufacturing process.

If you're able to age your materials, Figure 7-4 shows the recommended times. As you can see, the weathering times are quite long. That's why most fences are left unfinished.

The alternative to weathering block or brick is to select materials that are already the finished color you want. That way, no further coating is needed.

You can buy metal fencing that's already cleaned and coated. Factory coatings use both harsher chemicals and more durable materials. Most factory coatings are baked on, and will last much longer than air-dried coatings.

When you're ready to apply the coating, scuff-sand wood and metal surfaces. Sandblast concrete, cement, brick, block, stucco, ceramic and metals. Do *not* sand plastics or galvanized metal. The process will scratch plastic and destroy the protective qualities of the galvanized coating on metal. Don't sand stainless steel or anodized metals, either.

Protect Against U/V Radiation

When U/V radiation penetrates the surface of materials, its energy is dissipated or transferred to the material. At the atomic level where the coating bonds to the surface, the transfer of energy can break the coating bonds. For this reason, the manufacturers of paints and coatings for exterior use add U/V inhibitors. These additives slow down the energy transfer to a point where no damage to the bond occurs. Carbon black (soot) is a good U/V inhibitor. Most clear coatings for exterior use have iron oxide, another U/V inhibitor, which gives them a slight amber color. Opaque coatings are generally immune to severe U/V damage because the pigments in the coating absorb the U/V rays. Clear coatings are most vulnerable to damage from radiation if they're not especially formulated for exterior use. They'll turn white, flake, peel, and powder if they don't contain a U/V inhibitor.

Remember, there are four things that affect the life and service of coatings: water, oxidation, contamination, and U/V radiation. As a professional, you have to take all these into account and deal with them. Don't take shortcuts, or your reputation will suffer.

Coatings and Their Uses

Here's an alphabetical list of coating materials and their applications.

Asphalt (or tar) is one of the prime coatings used to protect fence posts and foundations. It's a petroleum product that's black, thick, toxic and flammable. Roll or brush it on the back side of retaining walls, on both sides of foundations, and on the bottoms of both metal and wooden posts. It protects surfaces from water penetration at a reasonably low cost.

Asphaltum is a thin version of asphalt. It's an effective coating for posts above ground, rails and boards. You can brush, roll, or spray it. When heated, it thins out even more and penetrates deeper into the surface. Asphaltum is a preferred coating for fences used on horse ranches. It sinks in to protect the wood, and it tastes bad enough to discourage the horses from chewing on the fence.

Cement paints are water-based paints with pigment added. They're actually portland cement, and may also contain calcium chloride, aluminum stearate, hydrated lime, zinc sulfide or titanium dioxide, and up to 50 percent fine sand as a filler. Some brands use epoxy instead of water/latex as a carrier, which makes the paint very water resistant. The sand filler makes it fill large spaces and voids. It's a good cement block filler. You apply it with a trowel or special spray equipment. Cement paint is usually applied to a thickness of ⅛ to ¼ inch. It comes in powder form, ready to mix with water and specially formulated colorants.

Cement paint works well on iron that's exposed to water for long periods of time. The paint prevents rusting because it's a *base* (chemically). You'll have to think back to your days in high school chemistry for this. Both acids and bases will attack most other materials, etching wood, plastics, glass and metals. So both acid and base paint will etch and adhere to metal. But since cement paint is thick, it lasts longer and protects from rust better.

Creosote is derived from coal-tar and is similar to asphalt. It protects wood from rot and insects. But it's banned in many areas because it's toxic when burned.

Enamel paints are available with carriers of varnish, polyurethane, acrylic, and oil/alkyd resin. Enamel dries to a hard glossy film that's weather resistant and sticks well to most surfaces. Enamel isn't my first choice for exterior work because it won't let water vapor flow through it. When water is trapped in a fence or wall, it makes the enamel blister or peel. Oil-based enamels are being discontinued by most manufacturers because they're too toxic. The newer

latex (water-base) enamels are taking their place. Unfortunately, water-base enamels still aren't quite up to the quality of the oil-based ones.

Latex paints are the most popular paints today. They're inexpensive, easy to apply, and clean up with soap and water. The latex in latex paints is actually a synthetic polyvinyl acetate. You can get latex paints in flat, semi-gloss, or full-gloss enamel finishes. Use flat for block and cement walls, and semi-gloss for board fencing. Coverage and durability are very good. Touch-up is easy, even weeks after the initial application. I like latex for concrete and stucco work, because it breathes and lets moisture vapor pass through. It lets the underlying surface dry out, so it doesn't peel or blister.

Masonry paints are liquid paints in the latex family, made from polyvinyl acetate. They aren't cement based, but they do resist the alkali of the cements they're applied to. Masonry paints are applied the same as any paint — with brush, roller or spray — and are an effective water seal.

Plastic coatings dry to a hard, tough, shiny finish. They resist water, alcohol, chemicals, heat, abrasion, and household cleaners. The most common type is polyurethane. Its only drawback is that the drying time is long — several days between coats. It takes several coats to give an "under glass" look. Specify a U/V inhibitor in plastic coatings for use outdoors. You'll probably never have to finish a fence like this, but the owner may want a high-gloss finish on a railing around a patio or balcony.

Some of the newer urethanes set up tack-free in one to four hours, so you can re-coat within that time, or wait 48 hours. You just can't re-coat between four and 48 hours or you'll end up with wrinkles or maybe even cracks.

Stains are dyes made from plants and mineral ores mixed into a carrier. Stains do a better job of coating lumber than paints do. They sink in deeper and surround the wood fibers. Paint remains on the surface. Stains fade, but very seldom peel or flake. Stain is available in dozens of natural wood colors, as well as decorative shades like red and blue. It comes either transparent or opaque. Opaque stains mar easily, so I don't recommend them for anything that people will sit or walk on like decks or benches. Use the semi-transparent stains for these, instead.

Varnish is the generic name for coatings that dry to a hard, lustrous finish. Most varnish is clear, but you can tint it. The best varnish for fencing applications is *spar varnish,* the kind used to protect boats and exterior railings. Apply it with a brush or spray outfit.

Wood green is replacing creosote for most applications. It protects against rot and insects when it's applied correctly, which is by injection, not brushing. This is a factory treatment, as the chemicals are applied under great pressure.

Wood preservative paints are made from a variety of ingredients. The most common are oil with creosote, cuprite, Paris green, or pentachlorophenol. Some are made from petroleum hydrocarbons, such as asphalt and bitumen. Some contain balsam, an oil resin from plants. All do a fine job protecting fences and fence posts.

When to Apply Coatings

Once your project has weathered properly and you've cleaned it thoroughly, you're ready to apply the coating.

You can apply asphalts and tar-based products almost any time of day — the hotter the better. In warm weather, the coating sinks into the surface and grips better. In cold weather, use a *hot pot* (a temperature-controlled kettle) to heat the coating material. *Do not heat over an open flame.* The vapors and the materials are flammable and can explode.

Wait until after any dew has evaporated to apply stains and paints. Surface and air temperature should be from 60 to 80 degrees F. Lower temperatures will slow drying, make application more difficult, and possibly trap moisture. Higher temperatures will speed drying to the point where application becomes very difficult and the coating won't be absorbed enough to adhere properly.

If you must work in very warm weather, schedule your coating job for the morning hours or follow the sun. Keep working in shady areas as the sun moves across the sky during the day.

Avoid working in the late afternoon or early evening hours. Night air is very moist and will keep the coating from drying properly.

Also, in many areas the temperature drops very rapidly when the sun goes down. This rapid drop in temperature is a shock to the coating. It tries to contract too quickly and cracks.

Painting Tools of the Trade

The best painting tool is no tool at all. If you can get away with it, try to avoid having to coat fencing material. Bricks come in several colors that don't require coating. Block comes in colors also. You can buy metal railing fences coated at the factory. Most aluminum, steel, or vinyl siding materials are precoated. Use wire mesh with a vinyl rubber or urethane coating. Stainless steel, brass, chrome, aluminum, rocks, cedar and redwood don't have to be coated.

But if you must apply a coating, you have a wide choice of tools. Among them are brushes, rollers, paint pads, paint gloves, canister sprayers, airless sprayers, and pump sprayers. Each is good if used properly and for the intended application.

For instance, you wouldn't try to paint a chain link fence with an airless spray outfit. This equipment can spray up to a gallon of paint in 45 seconds. On a chain link fence, about 98 percent of the paint sprayed would be lost in the air. On a block or stucco wall, about 99.5 percent should land on the wall and stick to the surface.

You can use a brush to coat a metal railing or pipe fence very effectively. But you can do the same job with a paint glove in about a tenth of the time. A paint glove is a rubber glove that's coated with fabric similar to a paint roller. You dip your hand into the paint and rub the paint onto the surface. It's very fast and easy. You can buy paint gloves for less than most brushes cost.

Here's a list of the common fence painting jobs and the best tool to use for each:

- *Chain link fences:* Use a medium- to long-nap roller. Make one pass down one side of the fence and a second pass down the other side. Do touch ups with the roller or with a brush.
- *Wire mesh fences:* Same as chain link.
- *Pipe fences:* Use a paint glove or a brush.
- *Siding fences:* You can paint wood, metal, or vinyl with a brush, roller, or airless sprayer. The airless sprayer is the best, with a roller second best.

"A paint glove is a rubber glove that's coated with fabric similar to a paint roller."

- *Block, brick, and concrete walls:* If they're very smooth, use a roller. If they're rough, use an airless sprayer. If you use a roller, use the serrated foam rubber type designed specifically for rough surfaces. Most nap-type rollers will catch and pull on these surfaces. The roller won't last long, and the nap will stick to the surface you're painting. You can't use the serrated rubber rollers if there are lots of sharp or jagged edges, such as on a stucco wall.

  Use a trowel to apply very thick coatings like tar or filler paints to brick, block and concrete walls. These coatings go on from ⅛ to ¼ inch thick, compared to six to 40 thousandths of an inch thick for most paints. Some can be applied with a brush or special spray outfit.
- *Wood, smooth:* Use a brush, roller or airless sprayer, depending on how the lumber is spaced. For instance, use a brush or roller for a picket fence because you'd lose too much paint if you use a sprayer. Use a sprayer for a board fence – a brush would take too long. You can do either one with a roller or paint pad.
- *Wood, rough:* Use a sprayer or a brush, depending on the spacing of the lumber. Rollers and pads don't work well because the nap catches on the rough surface.

- *Wood, alternate method:* The best and fastest way to coat wood stock is to do it before you build the fence. This method uses more paint but gives a better, deeper-penetrating coating in much less time. This is the preferred method for applying a wood preservative. Use a paint bin filled just deep enough to coat one side of the lumber. Soak the boards for at least a few seconds and up to a minute or so. Then turn the boards over. To test for penetration, cut a piece off a board and look at the cut edge. A penetration of ⅛ to ¼ inch is considered very good.
- *Glass and plastic panel fences:* These aren't usually painted, but sometimes you'll need to coat them to control the sun or block the view. For best results, use a conventional spray gun. The coatings for these materials are thin. An airless sprayer won't handle them as well as a conventional spray gun will.

  Be very careful of runs and drips. You can use a roller or a brush. But it's hard to get good coverage and a smooth finish that way. For small areas, use a canned aerosol spray. The disadvantage with canned aerosols is their high cost. An aerosol can will only cover about 40 square feet of surface area. Four aerosol cans, which will cost about the same as a gallon of paint, will cover 160 square feet. A gallon of paint covers 350 to 450 square feet. So aerosols cost more than double.

How to Choose Your Tools

The cost of a paint brush depends on the kind of bristles, size, and quality. Most brushes are made of synthetic bristles, which you can use for stains, polys, lacquers, enamels, and latex paints. Natural bristle brushes are preferred by many painters. They're great for doing quality interior work using oil-based paints, but not for latex or water-based paints. The bristles soak up the water and swell, ruining the brush in the process. Polyester or nylon/polyester brushes are best for fence work. Natural bristles will abrade and don't hold up to the surface roughness of most wood fences and block walls. Nylon softens from the sun's heat and won't apply an even, controlled coating when hot.

Rollers come in lamb's wool or synthetic materials. Professional painters prefer lamb's wool for quality interior work, but the synthetics are fine for fences. They're inexpensive, so you can afford to use them once and throw them away. Cleaning usually takes too long, especially if you try to get them completely clean. A long-napped roller is best for most fences.

Paint pads and paint gloves fall into the throwaway category, also. They're also inexpensive, so they're not worth the bother of cleaning.

Here's a tip for keeping brushes, pads and rollers in good condition between uses or during a break: Don't wash them, just cover them with aluminum foil or plastic wrap. You can keep your tools this way for up to a day or so. After that, throw the pads and rollers out. You can keep a brush in good condition for up to a year if you soak it in the proper cleaning solution, wrap it in foil, and keep it in the refrigerator.

Power rollers use a small compressor to pump paint into the roller or pad as you use it. You save time by not having to dip the roller in the paint tray, but the additional cost of the rollers might not be worth the extra convenience.

"Here's a tip for keeping brushes, pads and rollers in good condition between uses or during a break: Don't wash them, just cover them with aluminum foil or plastic wrap."

Conventional spray units are expensive and they're great for spraying fine work with light-body paints and stains. I don't recommend you spend that much money for fence work. The materials you'll use are medium- to heavy-bodied and won't spray well with a conventional sprayer.

An airless sprayer outfit is almost essential today. An airless can spray paints as thick as tar. With enough horsepower and the correct spray tip, you can spray stucco. For outside work, I recommend a three- to five-horsepower gasoline-driven unit. These units are very expensive, so you'll probably want to rent. You can rent airless units in many places by the day, week or month.

Don't fall for one of the cheap airless units on the market. They're designed for the homeowner who'll do one paint job every five years, not every day or week.

Color

Everything you apply a coating to will both absorb and reflect light. It's this reflected light that we see as color. But color can be tricky. It's only what people perceive it to be. Some people see red as pink, others see it as violet, and still others see it as gray. You need to help your customer select the right color for the job. Sometimes it's helpful to make a little sketch of the wall or fence you're building and color it in. It helps you and the customer see how well it will blend with nearby structures and landscaping.

Here are some other things to look out for:

1. Make sure the color looks the same when it's applied as it does on the sample or in the can. Keep in mind that the color of a small sample is not as bright as the color will appear when it's applied to a large surface.
2. Use a color that's suitable for the neighborhood. Many neighborhoods have HOAs that have the right to approve exterior color schemes for the community. You paint a fence bright green in a neighborhood where all the other fences are tan, and you'll get a reputation for being a troublemaker!
3. Color changes with viewing direction, the kind and level of light, and surface smoothness. Coat a sample spot before you plunge in and paint an entire wall or fence. Allow the sample to dry completely; some coatings change color as they dry. Look at the color from several different directions and under different light conditions — morning, noon, and evening. If both you and your customer are satisfied, then finish the job.
4. Avoid bright or dark colors. The pigments will fade very quickly in the sun. Use tans, grays, and whites and you shouldn't have any fading problems. Bright colors turn whitish very quickly. Brown is one exception; dark brown fades to light brown that's still acceptable to most people. There's one situation where dark colors work best, however. In areas with a lot of moisture and little sunlight, dark colors help to absorb the heat and dry out the excess moisture. It's also a good idea to add chemicals to the coating to kill mold and mildew.
5. Consider the effect of the color on the plants in the area. A large flat white wall or fence reflects a lot of sunlight and heat. It can raise the temperature to over a hundred degrees up to 3 feet away from the wall. That's hot enough to kill many plants. In areas with a lot of bright sun, use darker colors to absorb the heat.

Some colors are traditionally used for certain applications. If you build a lot of picket fences, then stock up on lots of white paint. Ornamental iron fences are usually black. Wood fences are commonly shades of brown, from tan to dark. Block walls are mostly white or tan or pink pastel colors.

Certain fences *should* be painted a bright color. Snow fences, for instance, are usually painted bright red where they mark the boundaries of fields, driveways and roads. You want them to be very visible to the guy driving the snow plow.

If you work for the government, check Federal Specification 595a. It lists the colors you must use for various applications. Go on the Internet to find out how to get a copy.

What happens if you don't paint the newly-installed fence or wall? Most woods will turn to a silver-gray color. Metals will turn rusty red. Aluminum will turn grayish-white. Brick and block usually don't change color unless they contain a concentration of minerals such as vanadium or molybdenum — then they may take on a greenish color. Redwood turns brown unless there's metal touching it, in which case it turns black from the tannic acid reaction.

Keeping the Coating on the Fence

Here are a few tips to help you make sure that the coating you apply stays where it belongs. First, consider whether the material to be coated is smooth or rough. I call wood smooth if I can run my hand over it without losing skin or picking up splinters. Of course, glass, plastic and metal are smooth. Most masonry is rough.

Why does the surface texture matter? Because materials expand and contract with heat and cold. The coating also has to expand and contract at the same rate or it will crack and peel off. Here's the rule of thumb:

- On *smooth* surfaces, apply a coating that's as thin as possible while still coloring and protecting the surface. Thin coatings expand and contract much more easily than thick coatings.
- On *rough* surfaces, apply a fairly thick coating to counter the effects of weather and contaminants. The roughness of the surface will hold the coating in place.

Besides the texture of the surface, consider the weather conditions. Where there are wide temperature extremes, use rough surfaces and thick coatings. They'll hold up better. And in areas with little rain — or acid rain — advise the homeowner to wash down the fence or wall every few months. That will remove the dirt, acids and other contaminants that will attack the coating. In areas with heavy rains, apply a water seal product at least once a year. Finally, consider a mildewcide and an insecticide in areas threatened by termites, ants and other boring insects.

This page left intentionally blank

Chapter 8

Troubleshooting & Repair

FENCES AND WALLS ARE like everything else in the world — they wear out, they fall down, and they need fixing. Sun and rain make them dry out, discolor or rot. Wind blows them down. Water seeps into metal fences, block and brick walls, and causes them to deteriorate. Trees and plants grow in, over, and under fences and walls. As that happens, they'll eventually be destroyed.

If you're building new fences and walls, this chapter will help you avoid some common problems. If you're repairing existing fences or walls, let this chapter be your guide to making the right repairs at the right times.

Throughout this chapter I'm going to make my point by telling you about actual fences and walls I've seen that have failed long before the end of their normal useful lives. I hope that by learning about the errors of others, you'll avoid the same mistakes.

You can make a good business out of just maintaining fences and walls. It's an inexpensive way for a beginning contractor to start out. All you need is skill, knowledge and a few hand tools to sell your services to homeowners, businesses, and local government. Many homeowners don't have the time, energy, or talent to make their own repairs. They're just too busy making a living. They'll be more than willing to pay a knowledgeable professional.

Maintenance Contracts

You can do repairs on call or as part of a maintenance agreement. Sign your customers up for *preventive maintenance* contracts. Agree to inspect their fences and walls, and do routine upkeep like oiling hinges, tightening screws

and bolts, and tuck pointing loose mortar. Charge a yearly fee for this service. Charge your regular rate for any major repairs at the beginning of the contract, then you'll have an easy time the rest of the year.

Suppose you make eight maintenance calls a day on each of the 21 working days each month. That would give you 168 active contracts — a good annual income. You should be able to make those eight visits in three to five hours, which leaves you three to five hours for other work.

The best thing about maintenance contracts is that they get your foot in the door. Do a good job on the contract work and you're in a good position to sell the owner larger construction jobs. Figure 8-1 is an example of a preventive maintenance contract.

Is It Worth Fixing?

Here's the rule of thumb I use: If the fixing cost is more than 40 percent of the replacement cost, then replace it. As a maintenance contractor, you know how much it will cost to replace a fence or wall, and with some fences, it's difficult to determine what's best to do. See Figure 8-2. Keep your repair cost between 15 and 40 percent of that price. At less than 15 percent, you'd probably lose money on the job unless the repair is minor and very inexpensive. If you quote more than 40 percent, you probably won't get the work. Either someone else will underbid you, or the item isn't worth spending that much on because all the components are weathered and worn.

When it comes to repairs, remember three things:

1. the item being repaired once worked and was in good shape
2. something has happened to make it not work correctly
3. it can be fixed

Fences

The older a fence is, the more problems you'll find. Some fences fall apart within the first three years because of faulty design, materials or construction. Once they're over ten years old, they fail just from exposure and lack of maintenance. In most neighborhoods, about 90 percent of the fences and walls need some kind of repair. Many of them are over ten years old.

Here are some design problems that cause fences to fail before their time:

- foundation not deep enough to support a wall
- not enough support for line and corner posts
- posts set too far apart
- no internal support (rebar) in block walls

Preventive Maintenance Contract

Scope: To service and maintain in good condition the fences, walls and gates located at,

_____ in the city of _____

state of _____.

Includes: Service shall include a monthly inspection on the _____day of each month or within

_____days of that date.

Service: The service includes, but is not limited to, nailing of loose lumber, oiling of gate latches and hinges, tuck pointing of loose mortar, minor bracing and repairs.

Warranty: All materials and workmanship provided under terms of this contract shall carry a

_____day warranty.

Cost: This contract is $ _____and will continue in force from this date

_____ and for a period of _____months.

Cancellation: Contract ❑ may ❑ may not be cancelled by either party. If cancelled, the funds remaining will be refunded on a _____month prorated basis.

Payments: Customer will pay for contract in full upon acceptance, or may elect to pay $ _____

per month for _____ months.

Customer: _____

Address: _____

Phone: _____

Acceptance: Customer signature _____Date _____

Contractor signature _____Date _____

Paid **$** _____

by ❑ cash ❑ check # _____

❑ bank or credit card # _____

Figure 8-1
Preventive maintenance contract

- wood in contact with the earth
- poorly designed rail-to-post connections
- fence or wall too close to trees and root systems
- lack of proper caps and water drainage devices

Figure 8-2
A fence in need of repair

Material problems can include the following:

- wrong kind of fasteners and nails
- wrong lumber used, especially for posts
- incorrect concrete, cement, or mortar used
- incorrect or inferior sealer or paint used
- uncoated steel used for latches and hinges

Here are poor construction techniques that can lead to failure:

- lack of expansion joints or improperly-spaced expansion joints
- badly-finished joints on block or brick walls
- sloppy workmanship
- use of mortar that's too dry or mixed more than two hours before use
- unfinished weld joints on metal fences
- improper stretching of fabric on wire mesh fences
- over-tightening of screws and fasteners

These maintenance jobs are often neglected:

- regular oiling of hinges
- sealing or painting when needed
- fixing small problems as they develop
- cutting back trees, vines, and other plants from fence
- keeping drainage holes and pipes clean

Figure 8-3
Pets can push a fence out of alignment when they try to climb it

Figure 8-4
Vehicles can damage fences quite easily

Figure 8-5
Graffiti

Figure 8-6
Pet digging under fence

And then there's the normal abuse that all fences are subject to:

- climbing — by people (small and large) and animals (see Figure 8-3)
- being hit or pushed by vehicles, shown in Figure 8-4
- graffiti, as illustrated in Figure 8-5
- water from sprinklers
- pets that dig and chew (Figure 8-6)
- vandalism

And then there are the effects from weather:

- severe wind storms
- U/V destruction of sealers and paints
- snow loads that topple the fence
- rain and ice
- expansion and contraction caused by temperature changes
- shifting ground moving posts out of line

All these things will create a demand for your fence repair services. Let's get on with the kinds of failures you'll run across, and what to do about them. I'll begin with wood fences.

Maintaining Wood Fences

Wood fences are among the easiest and cheapest to build. But the tradeoff is that they also need the most care. If you come across one that wasn't designed well, and has been neglected besides, it could need a lot of work.

Fencing lumber absorbs water in three places: the top cut, the bottom cut, and where it contacts the rails. The rails should be sealed before the face lumber is attached. Use treated lumber for the rails. Mount the lumber so it's 6 inches above ground, if you can. If that's not practical, leave at least one inch.

Remember that redwood isn't entirely rot-proof. Heartwood resists rot, but white wood isn't much better than pine or fir. Most redwood sold for fencing has a lot of white wood. Treat it if it's going to be exposed to wet conditions.

When a fence starts to lean over, the first thing to look for is rotted posts, posts not set deeply enough into the ground, or posts not set in concrete. The only solution is to rebuild the fence, but you can salvage some of the face lumber.

I once ran into a situation where a gate hinge broke off and the supporting wood rotted away. There wasn't an obvious reason for the problem until the sprinklers came on and I discovered the gate was being watered every day. I installed a new face board on the gate, replaced the hinge, and repainted the gate. Then I had the owner get a different sprinkler head that watered the lawn and not the gate. Figure 8-7 shows what led to this repair job.

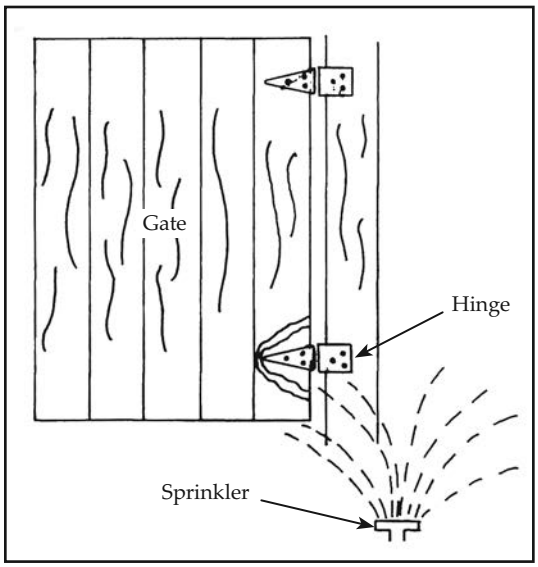

Figure 8-7
Sprinklers are hard on gates

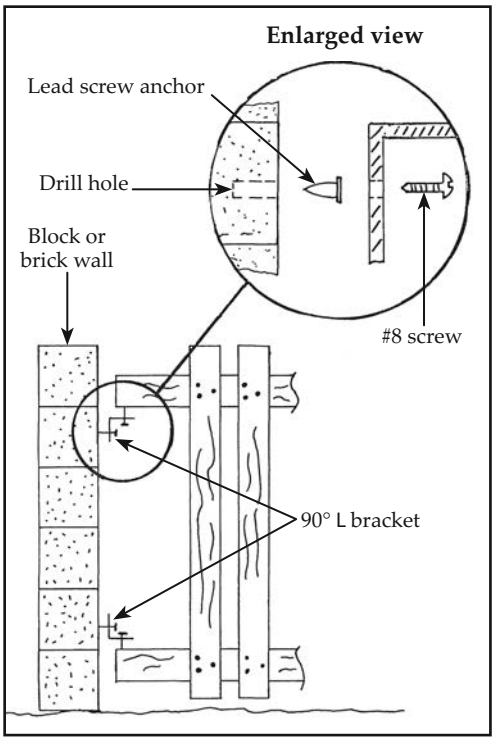

Figure 8-8
Attach wood fence to block wall with brackets and screw anchors

You'll often need to replace loose face boards. Several things can cause this problem:

1. nails that are too short, and not rustproof
2. unseasoned lumber that dries out and pulls away from the nails
3. plants that encroach on the fence and push it apart

One fence I was called on to repair had all three of these problems. The plants in question were bamboo — a very invasive plant — and the fence was double-sided. The bamboo grew between the two faces of the fence and pushed them outward.

To keep the same thing from happening again, I convinced the owner to cut the bamboo and apply a weed killer to the area. I renailed the fence with hot dipped galvanized nails, placing the nails ½ inch from the original nail holes.

I had one fix-it job where a fence section pulled loose from its anchor rod in the block wall. The face boards were attached with only one nail each when this fence was built. And when the end of the fence came loose, the face boards pivoted.

There were more problems here: The foundation of the block wall had shifted, causing the wall to tilt away from the wood fence. Also, the connection between the fence and the wall wasn't secure. The builder had drilled a hole in the end of the rail and shoved it onto a piece of exposed rebar.

So, how did I fix this? First, I leveled the block wall (see how to do this later in the chapter, under the heading *Leveling a Block Wall*). Then I used 4-inch L-brackets to fasten the wood rails to the block. Next, I drilled holes in the block, installed lead screw anchors, and used No. 8 screws as shown in Figure 8-8. I also renailed the face boards.

Don't fasten a fence to a stucco wall. Stucco is a finishing material, not a structural material. The stucco will dissolve where it's exposed to water trapped behind the post. Water will also damage the rail-to-post attachment. And when the wind blows hard enough, the fence will pull away from the wall. If it's a closed-board fence, it will get the full force of the wind.

The solution is to cut the fence back 6 inches and install a new post next to the wall. Anchor it in the ground with concrete, and nail another rail to the original, damaged one. You'll also have to scrape away the crumbled stucco and replace it.

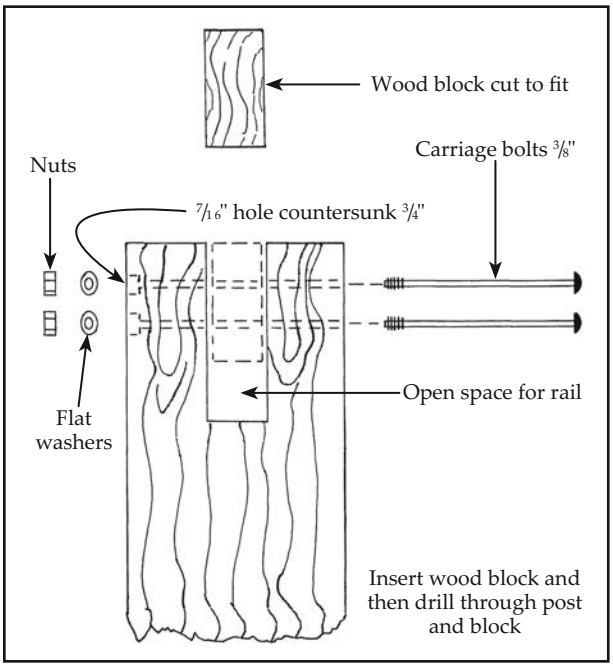

Figure 8-9
Repairing a split rail fence post

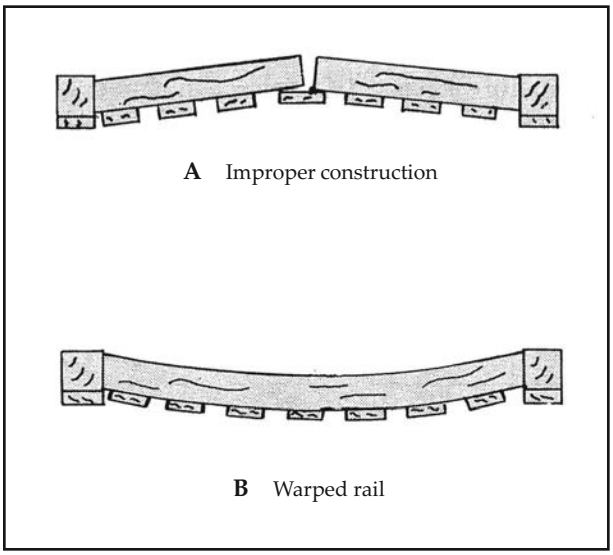

Figure 8-10
Fence rail problems

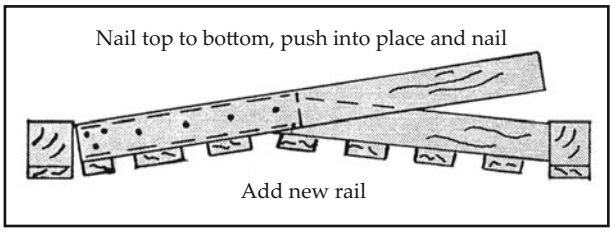

Figure 8-11
A fence rail solution

Don't nail a fence to brick, either. Brick fractures easily and turns to powder. Instead, use L-brackets with screws and lead anchors.

What if you have a peeler log rail fence that's been eaten by termites or ants? Peeler logs are untreated logs with the bark peeled off. The first step in solving this problem is to probe the rest of the fence with a screwdriver to find if there's any more damage. Solid lumber won't give way when you poke it; insect-ridden lumber will disintegrate. Remove the infested logs and spray the area with insecticide. Then replace the damaged logs with new, treated lumber.

If you look back at Figure 3-21 in Chapter 3, you'll see a split rail fence where the post has split and a section has fallen out. Figure 8-9 shows you how to fix this. Cut a block of matching lumber that's slightly narrower than the cut for the rail. Drill through the post and the block and insert long carriage bolts or threaded rod and fasten it with washers and nuts.

Wood screws may not be strong enough to withstand the stresses you put on a gate latch. Replace the screws with carriage bolts.

Figure 8-10 shows two rail problems common to wood fences. In diagram A, either the rail broke, or the fence was built with two pieces of rail butted together. Never end a rail in mid-air — always end at a post. In diagram B, the rail has warped with age.

Figure 8-11 shows you how to fix both of these problems. Add a second rail on top of the damaged one. Begin at one post and nail the new rail to the old

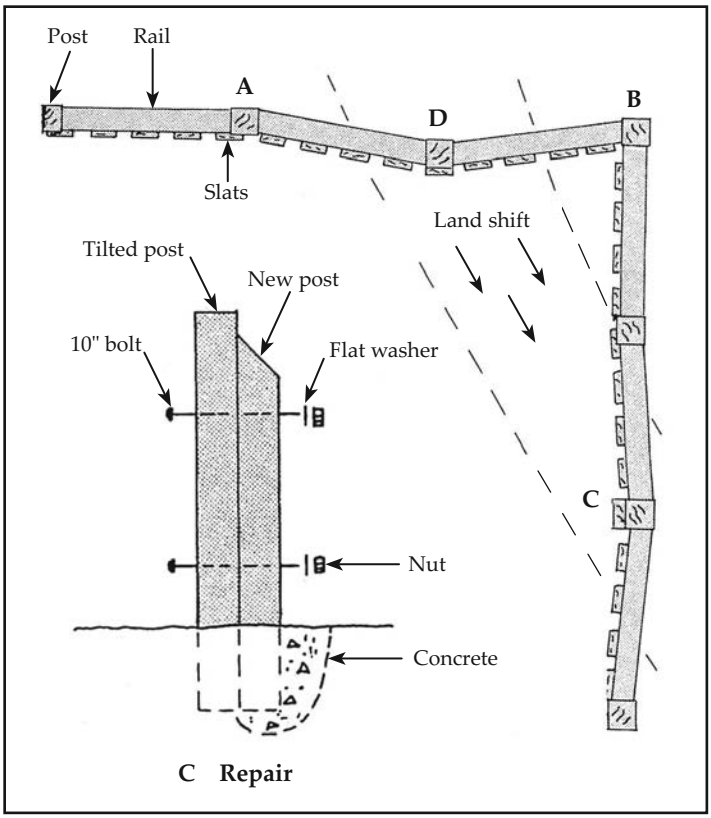

Figure 8-12
A fence that moved

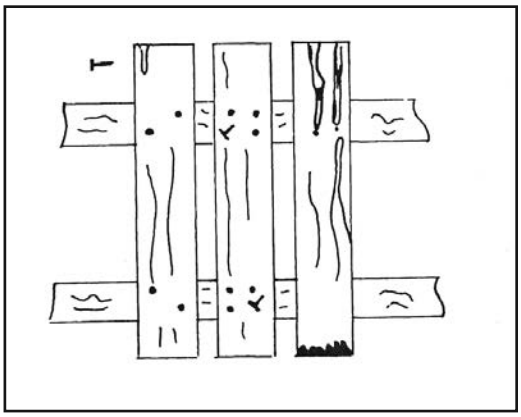

Figure 8-13
Board fence problems

one with 8d nails every 12 inches or so. Push the old rail into position as you go. If the warp is in the direction of the one in Figure 8-10 B, you'll need someone to push on the slat side of the fence while you work on the rail side. Or you could remove the face boards while you fix the rail, and then replace them.

I once had a problem like the one in Figure 8-12. Land sometimes shifts around by itself, and when it does, it takes things that are standing on it along for the ride. In this case, post D shifted out of line with A and B, and post C loosened and tilted backward. The solution here was to take the fence apart between posts A and B, dig a new post hole in line with them, and rebuild the fence.

The detail in Figure 8-12 shows how I shored up post C. I drilled through both posts and used $^1/_2$-inch bolts to attach a new post to the old one. Quick set post concrete kept the base of the new post in place. I also tapered the top of the new post. It looks better and lets water drain off.

Figure 8-13 shows a board fence with three problems. The first board has cracked near the top edge. You can probably fill a small crack with wood glue and small (2d or 4d) finishing nails. Replace the popped nails in the second board with hot dipped galvanized nails. Replace the third board entirely. It's rotted at the bottom, and the splits are too big to fix.

Refinishing Wood Fences

Many fences aren't painted. But if the weathered look isn't what the owner wants, you can recommend a wide variety of coatings. I explained in the last chapter how to paint a new fence. But here, we're more interested in follow-up care.

Fences should be recoated about every three to four years — more often if the fence starts to look bad or if water no longer beads on the wood. As long as the water beads, the coating is intact. When water doesn't bead, it means that the wood is absorbing water and will soon begin to rot.

When the coating really starts to peel, it could be from poor preparation work or improper coating selection. In this case, you'd have to remove all old loose coating and lightly scuff-sand the remainder before you recoat the fence. Use 100 grit sandpaper wrapped around a 2 x 4 sanding block to keep the splinters away from your fingers. Better yet, water blast the entire fence right down to the bare wood and start over. If some of the coating is peeling, chances are the rest will too. When it does, your new coating will peel off with the old.

Wood Fence "Surprises"

Before I leave the subject of wood fence repairs, here's a funny story about a not-so-funny repair job. Hinges take a lot of strain. On one repair job, the hinges ripped out from the weight of the gate the owner built for his storage shed. I expected only to remove and reinstall the hinge — about a 10 minute job.

"The whole area was overgrown with ivy that had to be eradicated. Poison ivy."

We all know about surprises when we're doing repair or remodeling work inside a house. But those are nothing compared to the surprises when you do outdoor work. In this case, the owner had built the gate by nailing 1 x 2 redwood boards to a sheet of ¼-inch plywood. Unfortunately, he had used interior plywood, and it was splitting apart. And he had nailed and clinched the hinges to the wood, so when the hinges ripped out, the lumber was torn up, too. I couldn't find replacement boards for the broken and missing ones, so I wound up making a new gate from 1 x 3 redwood mounted on a 1 x 6 frame. I prepared to finish the job with new hinges and long screws. But it wasn't that easy.

I discovered the gate post and adjacent fence were loose, so I had to brace and renail those. The whole area was overgrown with ivy that had to be eradicated. Poison ivy. When I was doing that, I ran across a nest of black widow spiders … my very favorite.

I built the gate on the ground and cut it square, but when I installed it, it didn't look right. The roof of the shed sloped, and that made it look like the gate was sagging. I had to trim the gate to match the roof line to make it look "straight." By then it was time to go home.

It rained during the night, so the gate I so carefully fitted the day before didn't open the next morning — the lumber was swollen. A little more effort with a wood rasp and plane finally finished the job.

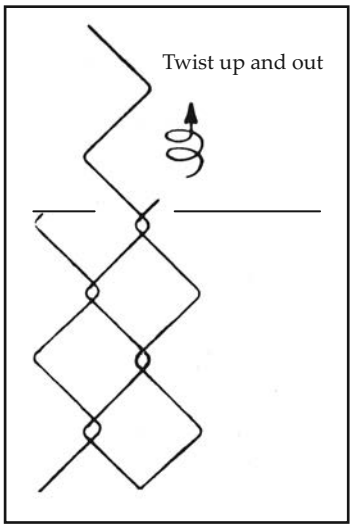

Figure 8-14
Removing a vertical strand of a chain link fence

Here's the point of this long story: *Don't take anything for granted.* Know what you're getting into before you start, and doublecheck everything. When you quote a repair job, allow something extra for situations like this one.

Repairing Chain Link

Chain link that's been cut is easy to repair. Sometimes you can just tie wire the cut section together. If the cut is large, or some of the fabric is missing, you have to splice a new section of fabric into place.

You can remove the vertical strands from chain link quite easily. Just pull and twist the strand upward and out. Butt a new piece of fabric next to the old one and reinstall the vertical strand by twisting it back in. See Figure 8-14.

If the damaged section is very large, I recommend you install tension bars and loops on the sections of fabric on both sides of the damaged section and attach them to the line posts. Replace the damaged section with new fabric and attach it to the posts with bars and loops. See Figure 8-15.

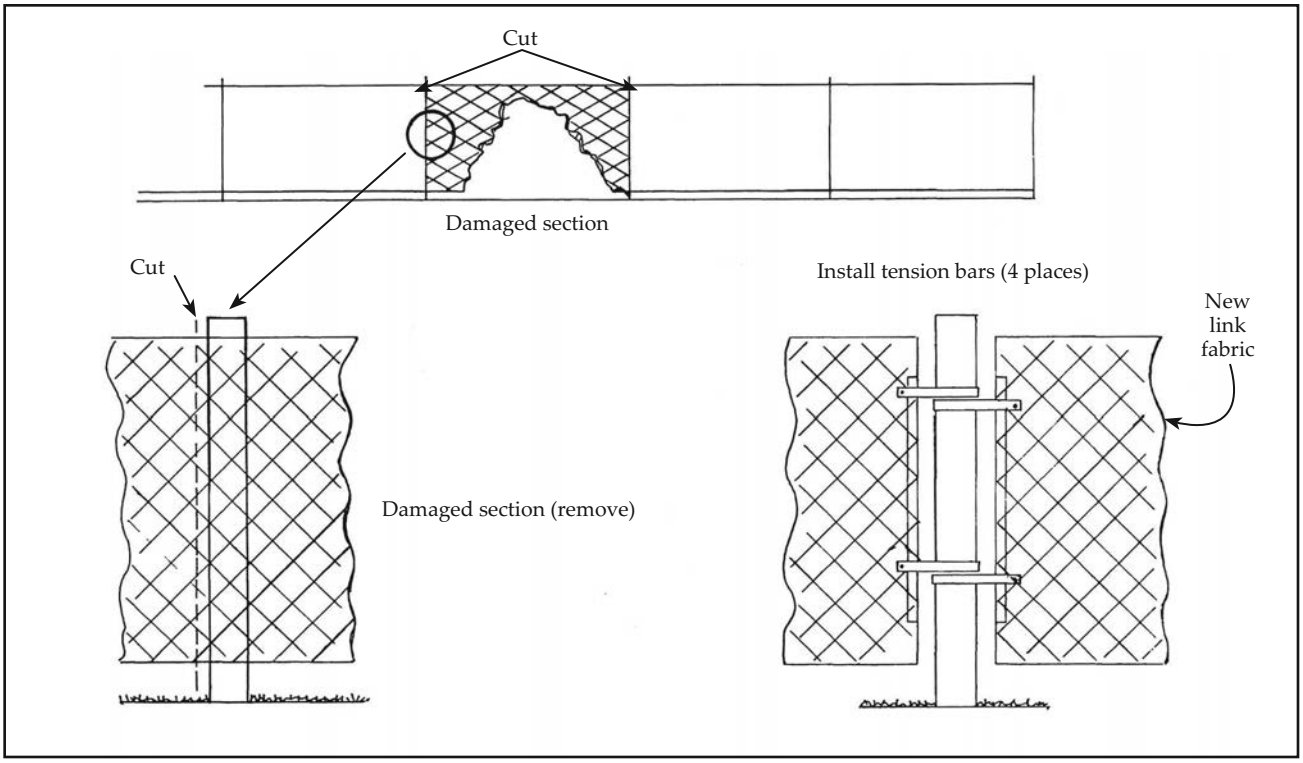

Figure 8-15
Replacing a section of chain link fence

Galvanized chain link fencing shouldn't rust. If it does, it's because the coating has been cut or abraded, exposing the steel. Clean the rust away with a rust remover such as *Naval Jelly* and rinse with clear water, towel dry, and apply a clear enamel or lacquer. You can also use galvanized spray paint to seal abraded spots. It's available in hardware and auto supply stores.

Removing Chain Link Fences

When you have to remove a chain link fence, you can often salvage the fabric and reuse it. Cut the tie wires and unbolt the tension loops and the fencing will drop. If the posts are anchored in concrete, there are several ways to remove them:

1. Use a backhoe or a bulldozer to dig the posts out.
2. Cut the posts off at ground level with a hacksaw or a welder's cutting torch.
3. Twist the pole out of the foundation concrete. To do that, remove the cap and fill the pole with chipped ice. That should make the post contract away from the concrete. Now, grab the base of the pole with a 36-inch plumber's pipe wrench. You may have to add a 6-foot length of pipe to the wrench handle to get more leverage.
4. Dig the posts out by hand.

If you use a welder's torch, be sure there's nothing in the area around the cut that will burn. Also, remember that you're cutting pipe coated with zinc and lead. The fumes are very dangerous. Proper ventilation is essential. This is also true if you're welding galvanized pipe together. Wear protective clothing and U/V eye protection.

Remember, any fence can require maintenance. But fixing a neglected fence will nearly always be more expensive than making timely repairs. Of course, the best solution is to anticipate the problems I've mentioned. Fortunately, it's not too hard — once you understand what cause fences to fail.

Walls

I ran across a very strange situation one time. The block wall was tilted, the fence was cut to match, and so was the gate. The owner "fixed" the fence in this case. The cause of all this was a tree that grew under the wall. The freestanding wall was on a concrete foundation. But as the tree grew, its roots tilted the wall more than 6 inches out of plumb.

Figure 8-16 shows the root system of a typical tree. The tap root usually doesn't create a problem because it grows straight down. The spreader roots near the surface are the ones that can give you trouble. As you see in the

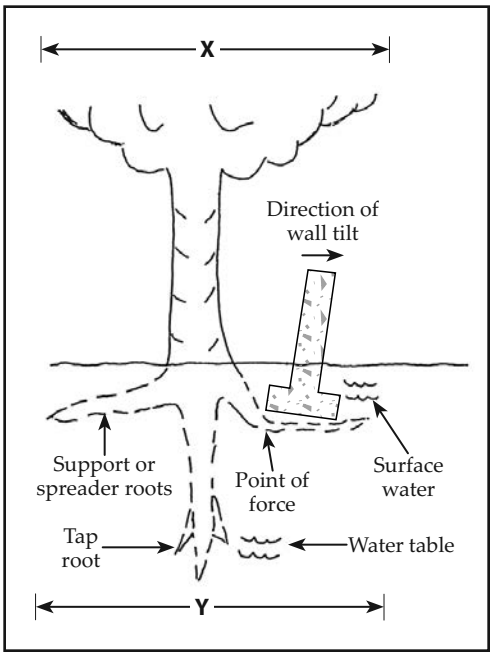

Figure 8-16
How a tree can displace a wall

drawing, the X and Y dimensions are usually about the same. You can tell by the spread of the tree how far the roots extend underground.

One solution is to remove the tree. If you can't do that, cut or saw the roots off about 3 feet away from the wall on both sides. That shouldn't damage an established tree.

Leveling a Block Wall

Here's how to straighten a block wall:

- Dig close to the base of the foundation on both sides and flood the area to soften things up. (In this case, I had to remove some brick pavers, too.) Use braces and a hydraulic two-ton automobile jack to over-plumb the wall by about ¼ inch. You may have to drive stakes into the ground behind the jack to keep it from sliding backward.
- Dig under the foundation about 6 inches on the side the wall is leaning toward. Pour new concrete under the foundation and up the side of it. Let the concrete cure for at least several days, then release the jack and let the wall settle back to plumb. Now, even up the fence and gate boards.

That tree cost this owner a lot of money. Damage from plants and tree roots is a common problem you'll probably have to deal with eventually.

In this case, it wasn't practical to rebuild the wall, because there wasn't access for a backhoe and bulldozer to tear out the old wall and foundation. Anyway, the repair was much cheaper than replacement.

Fixing Old Walls

Another common problem is replacing old wall components that aren't manufactured anymore. Suppose your customer knocks the cap off a pilaster and breaks it. Twenty years ago, when his wall was built, cap blocks were 1 inch thick. Today the standard thickness is 1½ inches. A new cap would look out of place with the old ones.

One alternative would be to replace all of them. A better one is to use a product called *Fix-It-All*™. It's a concrete patching compound for outdoor use and is available at most paint and hardware stores. Use it to fix block, brick, or even lumber. I've used *Fix-It-All* to cement the pieces of cap block back together. Where there were pieces missing, I used the cement to fill in the gaps.

In another repair job, the column the gate was mounted on had tilted about ½ inch. I couldn't shore up the foundation this time because the foundation was the driveway slab. The cure here was to break the column away from the foundation and then wedge it into plumb. You use *pickle bars* to do this. Pickle bars are wedges, like the one in Figure 8-17; you can buy them at auto supply stores. They come in sizes from 12 to 20 inches long, and are used to break apart stuck ball joints on cars. They're also great for wall and fence work. I used a good, sturdy sledge hammer to bang them into place under the wall. In this case, it only took one bar to raise the column ½ inch.

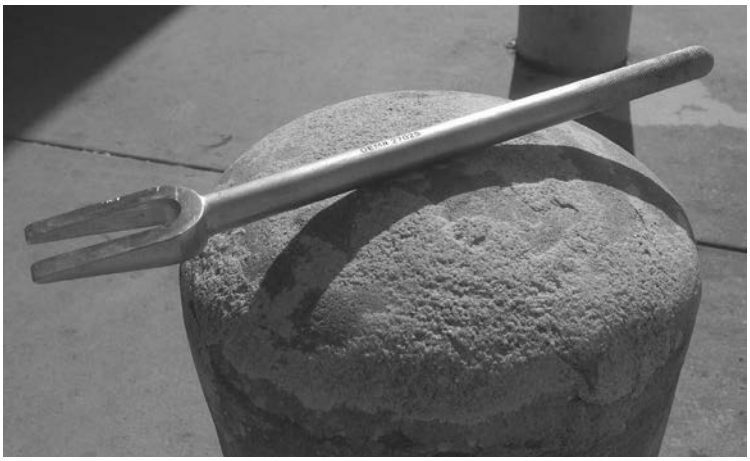

Figure 8-17
Pickle bar

Once the column was plumb, I squeezed a layer of Type II mortar under it. I used a mason's trowel and a few short pieces of wood to squeeze the mortar in tight. After I let it set up for a few days, I removed the wedges and filled the remaining space with fresh mortar.

Here's a typical problem with a brick wall — loose and missing bricks. This almost always happens on top or top end bricks. You have to chip off the old mortar and replace the brick, using new mortar.

I have a theory about the cause of this problem. By the time the person laying the brick gets to the top row, the mortar has dried out. Dry mortar doesn't penetrate the brick well, so the bond isn't secure. *Always use newly-mixed mortar on the top layers of block or brick walls.* In hot or dry weather, wet the bricks before you install them to prevent over-absorption of water from the mortar. Over-absorption leads to a dry, powdery bond layer. Also, people often climb onto brick columns and use the top course as a foothold for climbing.

Mortar that's too dry can also cause cracks in block walls — but they're more likely to be caused by the foundation settling or part of the foundation being raised by tree roots. In either case, repair the cracks before moisture gets in and damages the wall.

The technique you use to repair cracks is called *tuck pointing.* Chip out as much of the old mortar as you can. Remove all dust with a strong spray of water. Using hydrated Type II or Type S mortar, start at one end of the crack and tightly push mortar into the crack with a pointed trowel. Finish by striking off with a tool whose shape matches that of the remaining wall joints. *Repointing* is another name for this repair.

While you're at it, find out why the wall cracked in the first place. If you don't repair the cause, there's a better-than-even chance the wall will crack

again. Then it's your reputation that gets cracked along with the wall. Look for tree roots or inadequate footings. Another possible cause of the problem is a footing that isn't heavy enough.

Graffiti is a very common problem in urban areas. It's very hard to remove the "handwriting on the wall." And when you have this situation, you'll probably have to repaint the wall to get the proper color match. Here are answers to graffiti problems on a block wall:

1. Muriatic acid in a 10 to 18 percent solution straight from the bottle removes mineral-base stains.
2. Acetone removes fingernail polish and some acrylic spray paints. Use it full strength.
3. Use lacquer thinner full strength for lacquer or lacquer sprays.
4. Dissolve two teaspoons of lye crystals in a cup of water to remove oil-based paint. (This solution won't affect latex paints.)
5. Full strength methyl chloride (commercial paint remover) removes most paints, including latex.
6. Denatured alcohol (100 percent) takes off shellac.
7. Household bleach mixed equally with water gets rid of many inks. Use a neutralizing rinse of one cup vinegar in one quart of water.

You can buy commercial coatings that resist vandalism, but they work most effectively on smooth surfaces. Block and brick are porous, and therefore harder to protect.

Don't use a water blaster spray tip too close to a wall — you can eat a hole through stucco, brick, block and wood in seconds. *Never* check for pressure by putting your hand in front of the spray tip, and *never* point the spray tip at anyone.

If chemicals don't work, you can use a water blaster or sandblaster. These are motor-driven machines that spray water or sand at very high pressure. The particles easily cut through paint and rust. But be careful with both water and sandblasters; they produce pressures in excess of 2,000 psi. You can rent a water blaster at most rental yards. You can buy a new one, but they're very expensive.

How do you get rid of a natural stain caused by vanadium and molybdenum compounds in the clays the bricks are made from? It's easy. Remove this green-tinted stain by washing the brick with a solution of one cup sodium hydroxide (lye) mixed in ten cups of water. Rinse with clear water when the green color disappears.

Do *not* use muriatic acid on this type of stain. It will turn the stain from green to brown and set it permanently. Whenever you clean bricks with muriatic acid, always test a small spot first. Most bricks will clean up and brighten in color; but some won't. And others will stain.

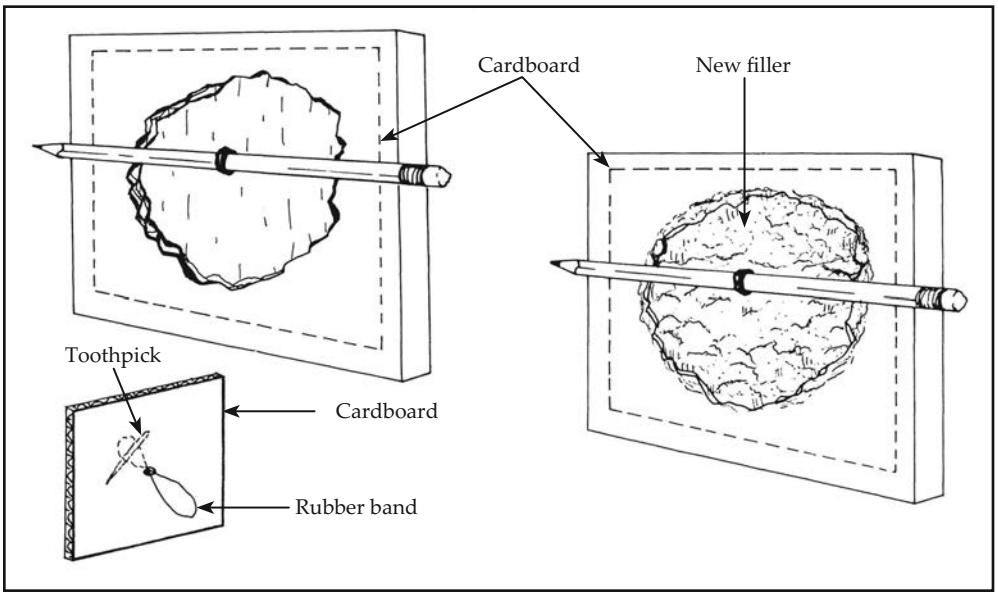

Figure 8-18
Repair a hole in plaster or stucco

If you've got a case of poor design, which allowed a knob on a security gate to punch a hole through a stucco wall, don't despair. The solution is to repair the wall and then install bumpers.

To repair a hole in a frame wall that's covered with plaster or stucco, cut a piece of heavy cardboard that extends about an inch all around the hole. Punch a hole through the center of the cardboard, and pass a short rubber band through the hole. Use a toothpick on the back of the cardboard to hold the rubber band in place. Poke the cardboard through the hole, and slip a pencil through the rubber band. Use the pencil to twist the rubber band until the cardboard rests snugly against the back of the hole. Figure 8-18 illustrates this.

Use plaster, wood filler auto body filler, or *Fix-It-All* to fill the hole to just below the level of the finish coat. Let it dry until it's very firm. Then clip off the rubber band with scissors, and apply and texture the finish coat to make the patch even with the existing surface. This method can also be used to repair holes in drywall.

An alternate solution would be to cover the hole with a painted metal plate. You could use a 4 x 4 electrical box plate, and secure it with toggle bolts. Or have a sheet metal shop make you a stainless steel plate. Then you wouldn't have to worry about painting *or* rust.

Chapter 9

Wiring & Plumbing

MOST FENCE CONTRACTORS AREN'T electricians or plumbers, so why am I including this chapter in a book on fences and retaining walls? Because fence contractors need to know a little about both of these trades. I can't tell you how many times I've had to move sprinkler lines out of the way or install a hose bib. And sometimes the reason I got the job was because I was able to install a lighting fixture on a post or hang an electric gate. To your customers, it makes sense to hire a fence contractor who can handle little plumbing and electrical jobs like these. It's not only good for your customers; it can also put some extra money in your pocket.

If you want to sell add-ons with your fence jobs, here's a good way to do it: Find a reliable supplier for exterior light fixtures and gate security devices. Bring along product literature, samples and pictures when you make sales calls. Offer to do those little extras that your customers want … even if they don't know yet that they want them!

There are a number of basic electrical or plumbing jobs that tie into fence and retaining wall contracting. You may need to install electrically controlled gates, or *hot* fences. In some cases, you'll be asked to include plumbing for a waterfall in a wall. Many fence jobs require changes in sprinkler systems or spigots. True, you could subcontract this work to plumbers, electricians, or security experts. But even then, you'll need to know something about their trades to supervise and approve their work.

Puppy Dog Selling

Place a temporary lamp or two where you propose to install lighting. Connect the lights to a power source with an extension cord. Leave them overnight. I call this *puppy dog* selling … leave a puppy with someone for a day or two and he'll want to keep it. The same thing will happen with your temporary lights. Your customers will appreciate the beautiful lamp fixture near their gate or entry. They'll appreciate the extra protection and visibility exterior lighting offers. And they'll want to keep it.

The first step is to get a copy of the National Electrical Code (NEC), published by the National Fire Protection Association. The NEC is the bible for all electrical work. There are also descriptions of several electrical and plumbing reference books at the back of this book. But to get you started, here's a fence contractor's primer on electricity and plumbing. Each city/village and rural area has a specific *NEC* code year they have adopted. You'll need to talk with your local building officials to determine which year of the *NEC* they use, so you can purchase the correct one.

Some Basic Definitions

The flow of electricity is called *current*. In electrical formulas and specifications, current is represented by the letter *I*. Current is measured in *amperes,* or *amps.* Think of amps as the volume of flow. The greater the amperage, the more current will flow. Electrical force is called *voltage* or *volts* and is represented by the letter *E*. You can think of voltage as the pressure behind the flow of current.

When you install a pressure regulator in a water line, the flow decreases. There's *resistance* to the flow. When electricity flows through wires, motors, and light bulbs, those things produce resistance to current flowing through them. Electrical resistance is represented by the letter *R* and is measured in *ohms.* The symbol for ohm is the Greek letter omega, Ω.

There's a direct relationship between current, voltage, and resistance. If the voltage stays the same and the resistance changes, then the current will change. This relationship is called *Ohm's Law*, after the man who discovered it. The formula for Ohm's Law is $E = IR$ (voltage equals current times resistance). In formulas like this, if two values, or constants, appear together without a mathematical symbol between them, you multiply them together. As with any three-value formula, if you know two of the values, you can find the third by turning the formula around. (See Chapter 16 for step-by-step instructions on how to solve contractor math problems.)

For example, to find the current if the voltage is 100 and the resistance is 100 ohms, divide the voltage *(E)* by the resistance *(R)*. The formula is $E \div R = I$, so the answer in this case is one amp of current ($100 \div 100 = 1$).

The unit of energy or *power* produced by the flow of current through a resistor is represented by *P* (or *W*), which stands for *watt.* Watt is the name of the man who discovered the relationship that gives us another formula, and the name for the unit of power. Watt's formula is $P = IE$, which means that power equals current times voltage.

If you substitute the values from the example above, you'll find that one amp of current times 100 volts equals 100 watts of power.

You can express Ohm's Law and Watt's formula in several ways to solve for any of the values. Here's a summary:

Ohm's Law

$E = IR$, or $I = E \div R$, or $R = E \div I$

Watt's formula

$P = IE$, or $I = P \div E$, or $E = P \div I$

You can also substitute values between the formulas:

Since $P = IE$, you can also say that $P = I \times IR$, because $E = IR$. You can also write the last formula as $P = I^2R$ which means you multiply *I* by itself, and then multiply by *R*. (I^2 is the same as saying "*I* squared," or "*I* multiplied by itself.") $P = E^2 \div R$ is another variation of the power formula. You get this formula if you substitute $E \div R$ for *I*.

Safety Features

Electrical devices are designed to operate under specific conditions. They're rated by those limits. The ratings tell you how much current, voltage, or power the device or appliance can handle safely.

But sometimes things go wrong. The power company may have a brownout or power surge. An installer may make a mistake when he hooks something up, or connect it to the wrong power source. Or maybe the device is defective or worn out. In any case, you need to protect electrical systems from shock or fire. You do that with *fuses* or *circuit breakers.*

> *"A circuit that shows zero resistance, not infinite (when measured with an ohm meter), is a* short *circuit."*

Fuses and circuit breakers *blow* or *trip* when there's an overload of current. Breakers and fuses are rated by the voltage they can handle, and the maximum current that can pass through them before they interrupt the flow. Too much current on a circuit with a fuse or breaker causes the circuit to open, and no current can flow. After you have determined the reason for the trip and have taken action to prevent reoccurrence, if the device is a fuse, you replace it with the same current rating as the one that blew. If it's a circuit breaker, you reset it.

Let's back up a minute and clarify a few terms. A *brownout* occurs when the voltage from the power company falls below the standard required. In the United States, residential lighting fixtures and receptacles provide nominal 120/240 volts AC. The minimum is 110/220 volts AC, and the maximum is 127/254 volts AC. When output voltage falls below 110/220 volts AC, it's considered a brownout. For typical electric utilities it means maintaining the voltage plus or minus 5 percent. When the voltage falls greater than 10 percent you have a brownout.

During brownouts, lights will dim, and operating motors and compressors will stall, overheat and possibly burn out. Poorly-designed timers and security systems will either not work or will require resetting.

A *circuit* is completed when power flows from the source, to the device being powered, and back to the source. If the circuit isn't complete, it's called an *open* circuit. A circuit that shows zero resistance, not infinite (when measured with an ohm meter), is a *short* circuit. The supply and return lines are connected without a load resistance in between.

Short circuits blow fuses, trip circuit breakers, and sometimes burn up wiring or components. The danger of short circuits is that they can set fire to the structure that contains the short. For this reason, the electrical code requires fuses or circuit breakers to be sized to protect the wiring contained within a structure. Separate fuses or circuit breakers, installed where power enters an electrical device, protect the equipment.

Most electrical devices have several parts. If one of those parts shorts out, the circuit will still be complete, and there will still be some resistance. That's called a *partial short,* or an overload. You'll usually notice the smell first — the shorted device overheats and sometimes burns. The odor you smell is actually ozone. If you design the circuit properly, a breaker will open to prevent further damage. This is important when you're installing an electrically-operated gate, for example. If a car hits the gate, the gate motor may stall, overheat and burn out. A fuse or circuit breaker should protect the motor.

An important safety note: AC and DC voltages below 48 volts are not considered harmful to humans. AC and DC voltages above 48 volts *are* harmful.

Electrical Power and How It Travels

The power supplied by the power company is AC power. AC stands for *alternating current.* DC, or *direct current,* is generated by batteries or converted from alternating current. The electrons in AC power flow in waves that vary in frequency (changes of directions) and amplitude (power). DC power doesn't pulse, but travels in a constant flow from the source to the thing it's applied to — its *load.*

Frequency is measured in cycles per second. The name for cycles per second is *Hertz,* which is abbreviated *Hz*. Each cycle has a positive and a negative pulse. In the U.S., power is delivered at 60 Hz. In many other parts of the world, power is supplied at 50 Hz. Equipment containing 60 Hz timers won't keep the correct time if they're operating at 50 Hz frequency. Television monitors and cameras designed to work on 50 Hz will not function properly on 60 Hz. Motors, fans and heaters must also be run on the proper frequency.

Think of wire as the pipe through which electricity flows. Water flows through the middle of a pipe, but electricity flows along the surface skin of a wire. That's why wire comes in various diameters. The larger the diameter, the more surface area, so more current can flow.

"In many other parts of the world, power is supplied at 50 Hz. Equipment containing 60 HZ timers won't keep the correct time if they're operating at 50 Hz frequency."

Wire size is measured by *gauge.* The higher the gauge number, the smaller the diameter of the wire, and the less current it can handle. Most wire is covered by an insulating jacket of rubber or plastic that keeps current from jumping to other *conductors.*

A conductor is anything (such as wire) that lets electricity flow through it. You yourself are a conductor. So are water and most metals. An *insulator* is anything that won't conduct electricity very well. Glass, wood, plastic, and rubber are all good insulators.

Converting AC to DC

Lights and motors operate better on AC than on DC. Control circuits operate better on DC. When you design a control circuit, you have to convert the AC line voltage to DC with a *power supply.* This usually consists of a *transformer,* a *diode bridge,* and a *filter network.* Most of the gate opener circuits and alarm circuits you install will include a power supply.

A transformer converts AC voltage from one level to another. A *step down* transformer converts from higher to lower voltage — for example, from 110 volts AC to 12 volts AC. A *step up* transformer converts the input voltage to a higher output voltage. An *isolation transformer* produces output voltage the same as the input voltage, though it limits the current that flows to the load side of the transformer.

A diode controls the flow of current, since it only lets current flow in one direction. Four diodes (in what's called a diode bridge) in a power supply convert AC input to DC output. But the resulting DC output will have spikes and ripples that can damage sensitive components; that's where the filter network comes in — it cleans up the DC.

The filter network probably has a *capacitor,* a storage device that passes AC but blocks DC flow. When voltage is applied, the capacitor charges to the maximum voltage. If you disconnect the current, the capacitor will hold its charge for a long time. This makes it very dangerous to work on capacitor circuits. You can get a shock from a charged capacitor even when it's disconnected.

It's good practice to discharge capacitors before you begin working on any device that includes a capacitor. Create a resistance path for the current to escape. Discharge time depends on the amount of resistance you switch in.

Switches

The most common switch is the wall-mounted light switch. It's made of two terminals and a moveable metal conductor strip. When the switch is in the off position, the conductor only touches one of the terminals, so the circuit is broken. When you turn the switch on, both terminals are contacted and the circuit is complete. Switches control all kinds of electrical equipment.

Relays are electromagnetic switches. An electrically-charged magnet moves the conductor to and from the terminals. Relays can be designed so they're either normally open or normally closed when the power is turned off.

Using Sensors to Operate Switches

Both alarm and gate circuits need to sense the presence of people or vehicles. Alarm circuits are often triggered by *light emitting diodes (LEDs).* They produce infrared light that's detected by a sensor that doesn't respond to ordinary light.

As long as the infrared beam isn't broken between the diode and the sensor, nothing happens. Once an intruder breaks the beam, the alarm goes off. You could use this kind of sensor to keep an electric gate from closing if something is blocking its path.

"Alarm circuits are often triggered by light emitting diodes (LEDs)."

You can also buy inexpensive detectors that use sound waves to turn switching circuits on and off. All of these have two things in common: a signal transmitter, and a signal receiver that drives an output switch to turn something on and off.

These are all *non-contact* systems. Direct contact systems require some kind of physical contact by the user. A good example of this type of system is a key lock gate entry. When you turn the key, the circuit closes to release the gate. Some security systems respond to a number code. You enter the code on a keypad, like the one in Figure 2-9, back in Chapter 2. Or you use the keypad to phone someone inside the building who releases the lock.

Pressure-activated switches use a special cable that's embedded in the ground or pavement. The cable has two conductors separated by an air gap. When the cable is compressed, the two conductors touch each other, and the circuit is complete.

Invisible Fences

Electronic fences are becoming more and more common. They're normally used to keep animals in a certain area. These aren't the same as *electric* fences, which are charged with enough voltage to shock a person or an animal that touches it.

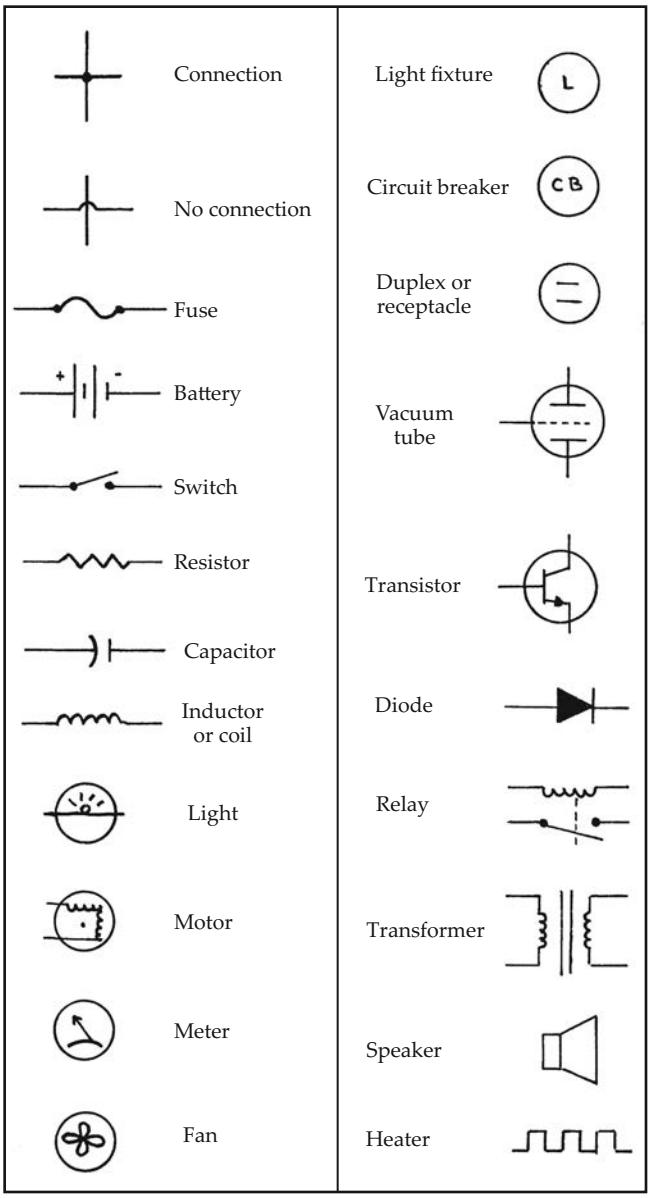

Figure 9-1
Symbols for schematic drawings

Basically, an electronic fence transmits a radio signal that either annoys an animal into withdrawing, or triggers a receiver on the animal's collar that sets a switch to deliver a mild shock. The animal learns to avoid the source of the shock — the invisible fence. In each case, you bury a wire in the ground and connect a radio transmitter to it. These systems are available through stores that sell pet and farm animal supplies and equipment.

An Electrician's Primer

Some fence contractors don't handle work that requires any understanding of electricity. I think that's a mistake. Remember this: An important function of most fences is to improve security. A fence or wall by itself is great for keeping *honest* people out. It's the dishonest ones you need to stop with the addition of lighting, an alarm, and/or a security system. And a security system built as part of a fence is nearly always better than a security system added later. It's easier to conceal and protect from damage by intruders. If you offer these additional services, you'll be a step ahead of your competition.

You can do this two ways: Either hire an electrician, or learn to do the work yourself and charge for the service accordingly. Licensing rules vary from state to state: Some states require you to have an electrician's license; others cover these activities under their licensing requirements for fence contractors. In some places you only need a building permit, but no license, and in others, you don't even need a permit if the dollar amount is small. Most jurisdictions *don't* require a license for low voltage systems using less than 49 volts.

You won't have to know the purpose of each component in a circuit to install an alarm system or gate operator. You *will* have to know where and how to install each part of the circuit. You'll also have to know something about your local electrical and building codes, and how to identify and select the appropriate components.

Figure 9-1 shows some common electrical symbols. In Figure 9-2, you see several of these symbols used in the schematic drawing for an alarm system. Figure 9-3 is my list of materials needed for the alarm system in Figure 9-2.

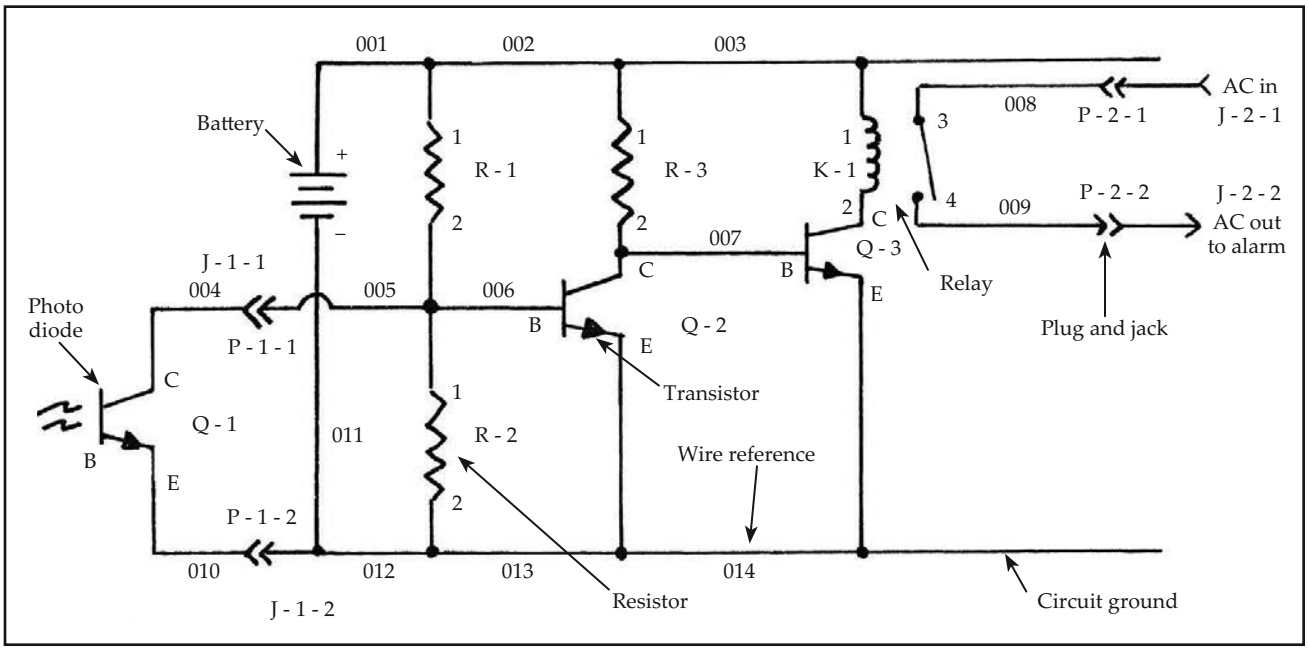

Figure 9-2
Alarm system schematic

Material Takeoff					Job: A-452 Date: 6-22-12 By: McElroy
Item	**Description**	**Quantity**	**Mfg**	**P/N**	**Notes**
Bty	Battery 9VDC	1	EV	9N32	Screw terminals
P-1/P-2	Plug 2 pin	2	Plugco	2F	
J-1/J-2	Jack 2 pin	2	Plugco	2M	
Q-1	Photo transistor	1	Tranco	2NPT01	
Q-2/Q-3	Transistor	2	Tranco	2N2200	
K-1	Relay SPST 9V	1	BP	9VSP120	Contacts rated at 250 VAC
R-1	Resistor 22K 1/2W	1	Risco	223.5	5%
R-2	Resistor 10K 1/2W	1	Risco	213.5	5%
R-3	Resistor 2.2K 1/2W	1	Risco	203.5	5%
–	Wire 16G blue	A/R	YCO		
–	Wire 28G orange	A/R	YCO		
–	Wire 22G brown	A/R	YCO		

Figure 9-3
A sample material takeoff

Color Codes

A little electrical knowledge can take you a long way. Here's something you can learn in a minute and may use many, many times: *Black Bears Rarely Outrun Young Grizzlies But Victimize Gray Wolves.* Remembering that sentence, called a *mnemonic* (a memory device), helps me identify electronic color codes. The first letter of each word in the sentence stands for a color. Each color has a corresponding number, as follows:

0	Black	5	Green
1	Brown	6	Blue
2	Red	7	Violet
3	Orange	8	Gray
4	Yellow	9	White

You'll see these colors on resistors, capacitors, and wires. Resistors are marked with colored bands. The band nearest the end is the first number of the resistor value. The next band is the second number, the third band is the number of zeros to add, and the fourth band is the tolerance. For example, a resistor with bands of red, yellow and green, in that order, is a 2,400,000-ohm resistor. The red band is the first number, 2. The yellow is the second number, 4. The green band means add five zeros. The fourth band will be brown, silver, or gold, representing 10, 5, and 1 percent tolerance, respectively.

Sometimes wire colors are listed on schematics by codes: #9 is white, #0 is black. You may also see #4/#0, which means yellow with a black tracer or strip. Wire gauge may also be shown by number, from #000 through #32. A *wire listing* associated with a schematic lists each wire, its gauge and color, and both ends of its termination. Figure 9-4 is a wire listing drawn from the schematic in Figure 9-2.

Schematics

Figure 9-5 is a schematic of a simple switch and lamp. Notice the wire color codes. The *hot* lead is always black on 110 volt AC circuits. The neutral, or AC return lead, is white. The switch is a SPST (single pole single throw) switch. The black wire from the line (plug) goes to the gold terminal. Figure 9-6 shows the same circuit using a DPST (double pole single throw) switch. The black wire goes to the gold terminal and the white wire goes to the silver terminal. Be careful, though. While this is the standard for AC switches and switching circuits, some might be wired wrong, or require that the hot lead goes to the silver terminal. Always turn the power off or check the terminals with a volt meter before you work on any switching circuit.

Wire Listing								Job: A-452 Date: 6-21-12 By: McElroy
Wire #	**Type**	**Gauge**	**Color**	**From:**	**Type Connect**	**To:**	**Type Connect**	**Notes:**
001	ST	16	Blue	Bty +	Screw	R-1-1	Solder	Two connections
002	ST	16	Blue	R-1-1	Solder	R-3-1	Solder	Two connections
003	ST	16	Blue	R-3-1	Solder	K-1-1	Solder	One connection
004	ST	28	Orange	Q-1-C	Solder	P-1-1	Solder	
005	ST	28	Orange	J-1-1	Solder	R-1-2	Solder	Jumper R-1-2 to R-2-1
006	ST	28	Orange	R-1-2	Solder	Q-2-B	Solder	Use low heat soldering iron
007	S	22	Red	Q-2-C	Solder	Q-3-B	Solder	Jumper Q-2-C to R-3-2
008	ST	12	Red	K-1-3	Screw	P-2-1	Solder	Hot AC in
009	ST	12	Black	K-1-4	Screw	P-2-2	Solder	Hot AC out
010	ST	28	Brown	Q-1-E	Solder	P-1-2	Solder	
011	ST	22	Brown	J-1-2	Solder	Bty –	Screw	Two connection
012	ST	22	Brown	Bty –	Screw	R-2-2	Solder	Two connection

Figure 9-4
A sample wire listing

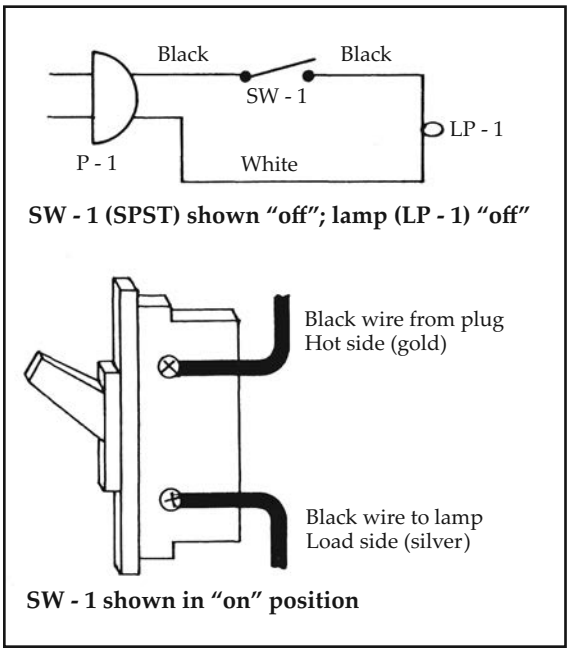

Figure 9-5
Switch and lamp/switch schematic

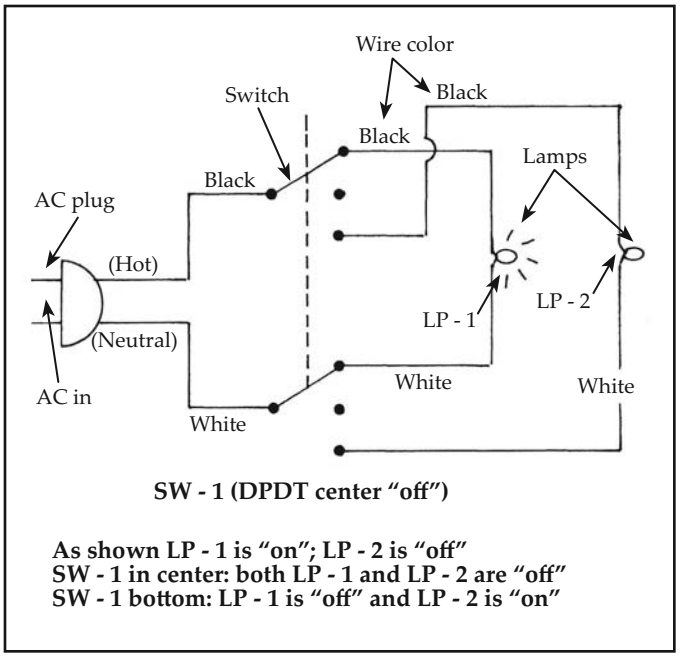

Figure 9-6
Lamp circuit with double pole switch

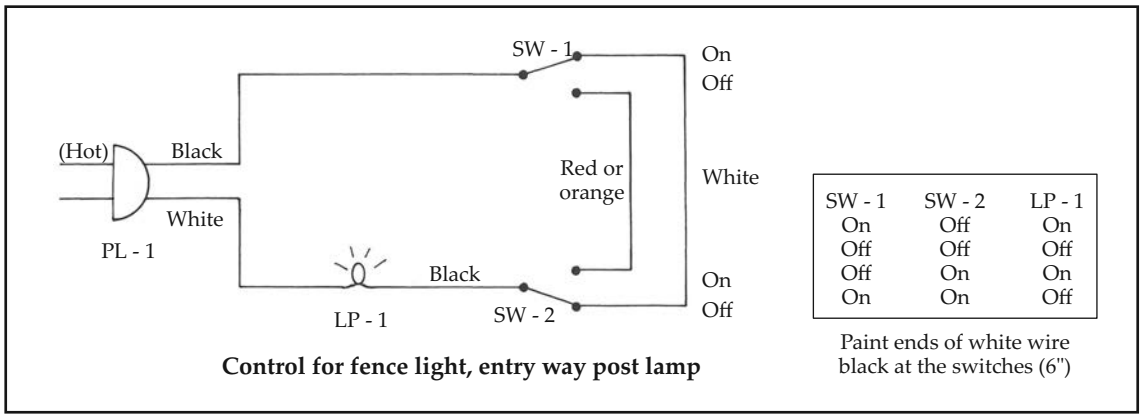

SW - 1	SW - 2	LP - 1
On	Off	On
Off	Off	Off
Off	On	On
On	On	Off

Figure 9-7
Two switches control one lamp

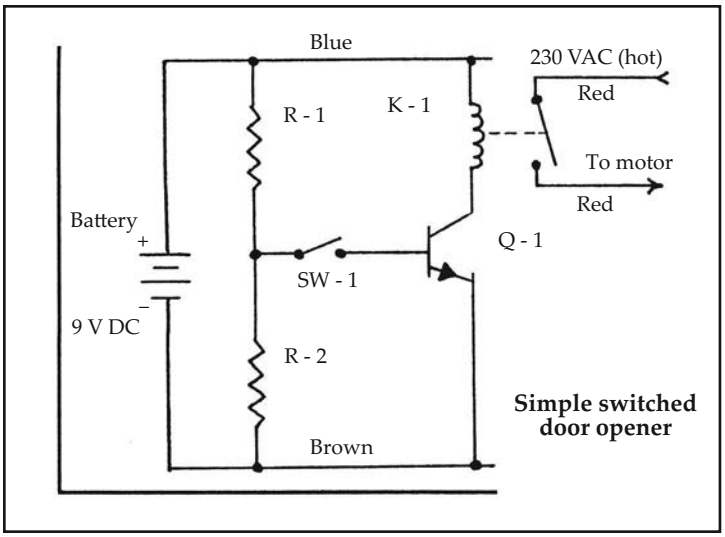

Figure 9-8
A DC circuit

In Figure 9-7, you see two separate switches controlling a single lamp. This is a three-way switch circuit. The switched wire is orange to show that it may or may not be hot. Blue and red are also used as switched wires. A circuit like this allows you to turn a light on or off from either switch location. For instance, you could turn a light on at the gate, and off at the garage or inside the house.

Figure 9-8 shows a DC circuit, a switch, a relay, and a battery. When switch SW-1 is closed, a positive DC charge is applied to the base of the transistor Q-1. (A transistor is a three-terminal semi-conducting device that switches or amplifies low voltage signals. Most garage door openers and alarm systems contain transistors.) This DC charge on the base of the transistor causes the relay K-1 to close and complete the 230-volt AC circuit to the motor, causing the motor to start.

In the U.S., the positive wire is red and the negative wire is black for low voltage DC current. The *NEC* doesn't require a specific color code on the ungrounded conductors of a DC system, but does require them to be grouped and identified. The grounded conductors are typically white or gray.

This type of circuit lets you control devices that require large voltages and currents with small switches and currents, such as motors. A common application for this is the hand-held remote control unit for a garage door opener.

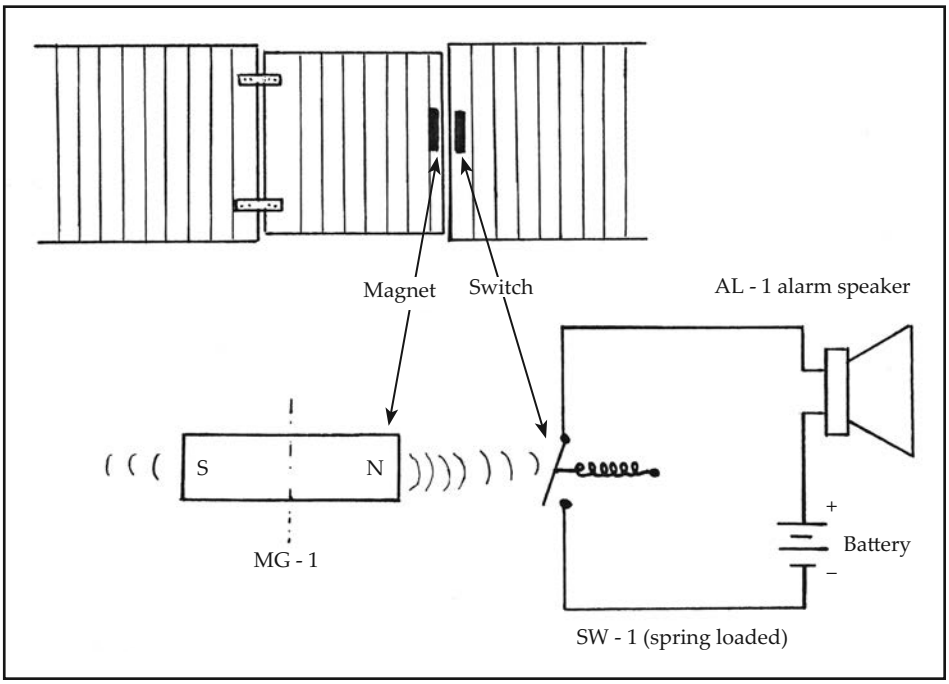

Figure 9-9
Magnetic switch system

When you press the button, 9 volts DC is applied to the circuitry in the remote unit which transmits a signal to the controller receiver attached to the main unit. A signal switching transistor turns on the 110 volt AC power to the drive motor.

Low voltage switches control alarm circuits, security monitor circuits, electric fences and sprinkler systems.

Figure 9-9 is a magnetic switch system. When the gate is closed, a magnet on the gate opens a switch on the gate post. If someone opens the gate, the magnetic field is broken and the switch on the gate post closes, completing the alarm circuit. The switch in Figure 9-9 is a magnetic reed switch. You can buy this as a two-piece plastic-encapsulated set at most electronic hobby stores. One piece contains the magnet (MG-1), the other the reed switch (SW-1). Power comes from a 9-, 12-, or 24-volt DC battery. The speaker (AL-1) is a special speaker designed to work on DC current.

This low voltage system is not recommended for anything above 48 volts. You only need one wire or conductor per circuit. An 18 gauge wire will do. It loops from the battery to the switch, from the switch to the speaker and back to the battery.

Each switch requires a separate circuit, but they can all connect to the same battery and speaker. For instance, you can install one circuit and switch for the rear yard gate, one for the front yard gate and one for the driveway gate. This system has a very low voltage and current drain, so the battery can be several hundred feet away.

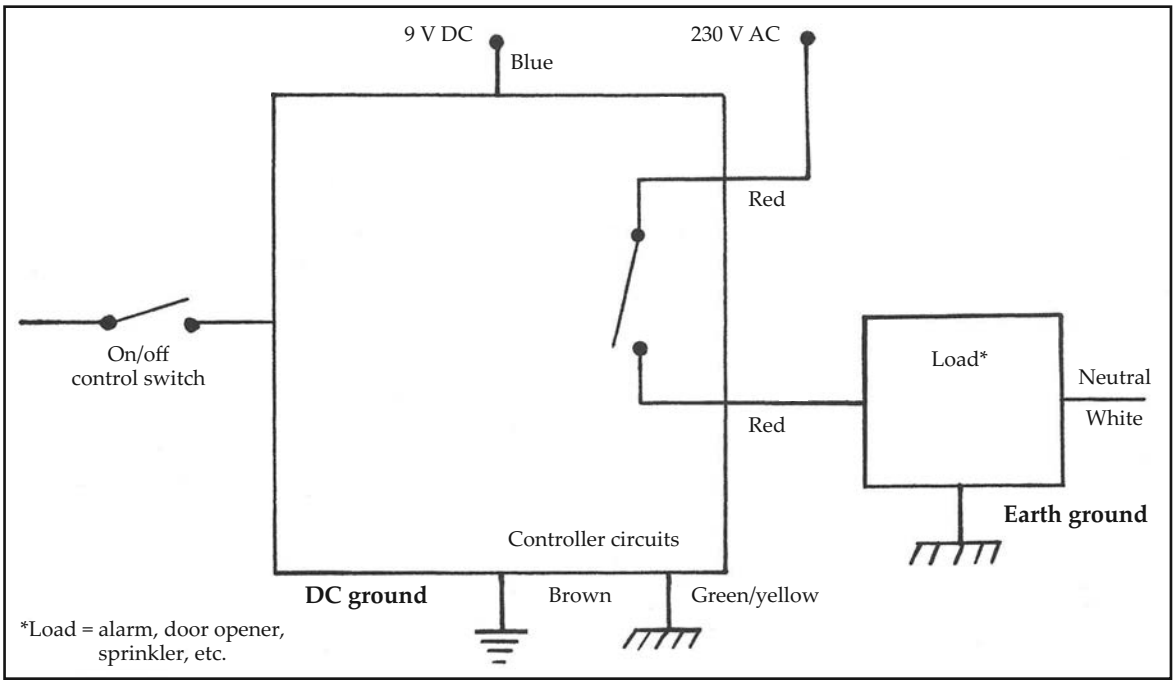

Figure 9-10
A black box diagram drawing

You can substitute a low voltage lamp for the speaker. Just be sure it matches the battery voltage. Personally, I like the speaker versus the lamp, as the lamp may have burned out and you're not aware of it. You can also add a toggle switch at the battery to turn the system off when it's not required.

Figure 9-10 shows a black box diagram of a circuit. The load can be an alarm system, a sprinkler system, a fire detector or a garage door opener. The term *black box* refers to a self-contained manufactured unit. A drawing that includes a black box is called a block diagram drawing. It doesn't show any of the circuitry in the box — it only shows you how to connect it to external switches, controls and devices. That way, manufacturers don't have to give away any of their trade secrets.

This type of drawing is much easier to read than a fully detailed one, because it shows only the hookup points and external devices. Notice the color code for the *earth ground* wire. In the U.S., plain green is used. All electronic equipment must be grounded to protect the operator from shock.

If there's a short in the equipment and the short is to the chassis, the earth will absorb the electricity. All conduit run to, in, or from your fence or wall must have a bare copper wire clamped to it. This *ground wire* then clamps to a ½-inch-diameter copper rod buried vertically six feet or more in the ground.

All power meters and circuit breaker boxes must also be earth grounded this way. The wire clamping must be metal to metal, with all dirt, oil, paint, and insulators removed.

Sand the surface where you're going to attach the ground strap with some 120 grit sandpaper. Use 10 or 12 gauge bare copper wire from the equipment chassis to the ground rod. Most chassis have a green grounding screw where you attach the ground wire. If there isn't one, then either attach the wire to a case screw on the chassis, or drill a hole and use a self-tapping screw. Bend the ground wire into a hook shape and attach it as in Figure 9-11 F. Building supply centers carry ½-inch by six- or eight-foot ground rods and wire clamps.

Use AC outlets with GFCI (ground-fault circuit interrupter) protection; install them in place of unprotected outlets. These outlets contain a circuit interrupter that prevents the user of an electrical device from getting a shock if something shorts out. You can also get circuit breakers with the GFCI option to replace existing ones in the main electrical panel.

Under most codes, all wet area and outdoor AC outlets must be GFCI protected. Wet areas are baths, kitchens, laundry rooms and pool or spa areas. Circuit breakers are easy to change; most of them just snap into the panelboard. Turn the main power off using the main breaker in the panel or at the meter to be on the safe side.

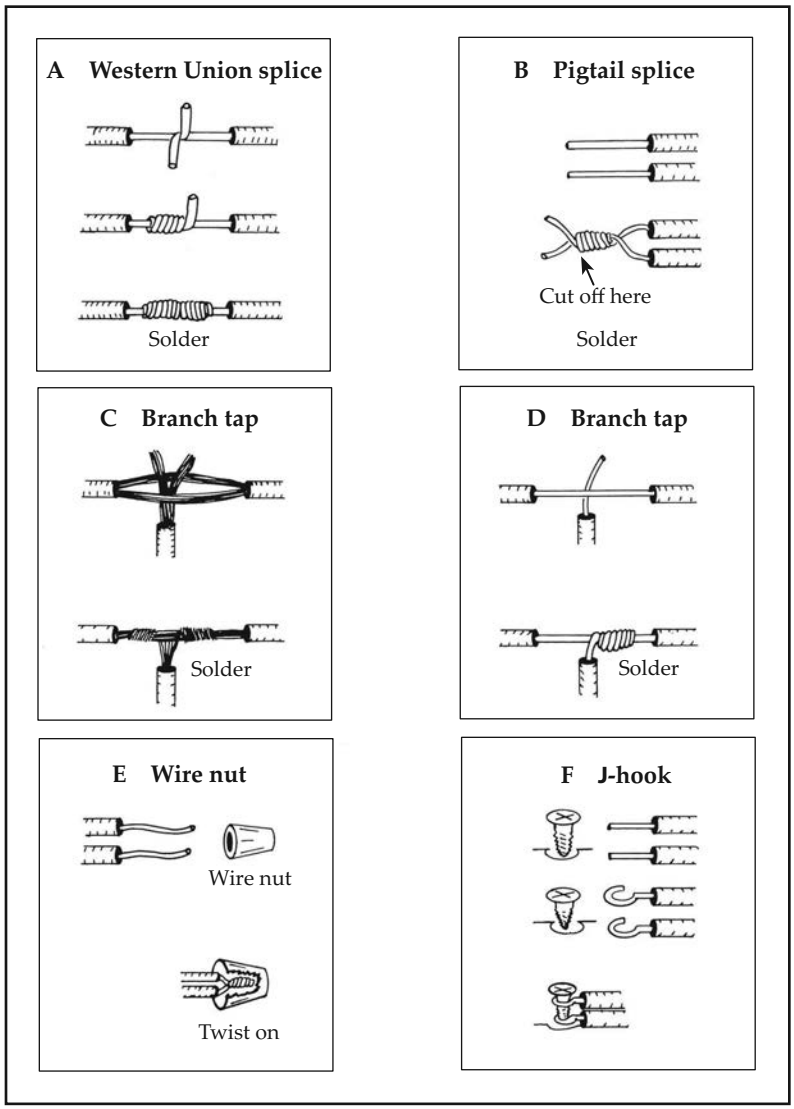

Figure 9-11
Proper wire connections

Conduit

Conduit is metal or plastic pipe used to protect electrical wires. If the electrical code doesn't allow the use of unprotected cable, you'll have to install conduit and then pull the conductors through that conduit. Metal conduit is available in several weights: *thin wall, intermediate* and *rigid.* You can bend thin wall conduit with a conduit bender so it turns corners and fits odd angles. You can't bend rigid conduit: It has to be cut and threaded for elbow fittings to turn corners.

Check with your local building inspector before you install conduit. Some places prohibit the use of thin wall conduit outdoors. Plastic conduit is available as gray PVC (polyvinyl chloride) pipe (see Figure 9-12). It's designed just

Figure 9-12
Plastic conduit

for electrical work. Don't confuse it with the white PVC or black polyethylene pipe only suitable for water lines.

Conduit comes in sizes from 1/2 inch up to 12 inches in diameter. You'll use either 1/2-, 3/4- or 1-inch conduit for most work. The size you need depends on the number, size, and type of wire you're installing. Refer to the *NEC* for a complete list. But here's a short guide to minimum requirements.

Wire gauge	1/2" conduit	3/4" conduit	1" conduit
#8	1 wire	3 wires	5 wires
#10	4 wires	6 wires	11 wires
#12	4 wires	8 wires	13 wires
#14	6 wires	10 wires	16 wires

Planning a Wiring Job

How do you know how many wires you'll need and their sizes? The circuit diagram (the schematic) will give you the wire count. The size is determined by the *load* the wire must carry. Load is the total current the wire must carry from all sources. A lamp may use a 110 volt AC, 100-watt bulb. Remember, current equals power divided by voltage. So the load current will be one amp (100 watts divided by 110 volts AC). A #14 wire, rated at 15 amps, will handle this load with no problem. Now suppose you had ten of these lamps all hooked to the same circuit. You have 10 times the current, or 11 amps. That's still within the capacity of a #14 wire.

But if you add a motor to open the gate that draws 6 amps, the load is 16 amps. The #14 wire isn't heavy enough. You'll have to use #12 wire rated at 20 amps total capacity. Again, you can find complete information in the *NEC*, but here's a summary, at the left.

Wire gauge	Current rating
#8	40 amps
#10	30 amps
#12	20 amps
#14	15 amps

For DC control wiring, use #18 wire; for alarm wiring use #22 wire.

Each circuit will have a minimum of three wires: hot, neutral, and ground. If you use metal conduit, that can serve as the earth ground. If you're using plastic conduit, you'll need a fourth wire, bare copper with no insulation.

Types of Wire

Electrical wire is either solid or *stranded*. Stranded wire is a bundle of fine wires that make up the conductor. Use only solid copper wire for earth ground, not stranded. Solid wire is easier to use in residential work. Most switches and plugs have insertion holes that make connections quick and easy. Just strip the insulation off the last half inch of the wire and insert the wire into the connection hole. Stranded wire is better for DC circuits. You usually solder DC connections, and stranded wire soaks up the solder better to get a firmer connection.

Look back at Figure 9-11. It shows how to make proper connections and splices. Poor connections cause equipment failures and can be a health hazard.

Wire in outdoor conduit should be moisture- and heat-resistant. Moisture-resistant wire is identified with a "W" (for wet). For example, *RHW*, *TW*, *THW*, *THWN*, and *MTW* are all moisture-resistant wire types. The "M" in MTW stands for machine use. It's rated for use around oils. "T" stands for thermoplastic, "R" for rubber, and "H" for heat. "N" is for nylon, an outer jacket over the insulation that makes the wire abrasion resistant.

"If wire in conduit has to be replaced, it's usually easy to pull the old wire out and install new. Burying new cable can be a major project."

Some wire comes with a protective plastic covering. For example, types *UF* and *USE* cable are designed for use as underground feeder lines without any protective conduit. UF stands for underground feeder, USE stands for underground service entry. Most codes let you bury these cables directly in the ground, although you can't use them in poured concrete walls.

You can use *NMC (non-metallic cable)* in wet locations or inside brick and block walls without using conduit. However, you can't use NMC inside a poured concrete wall.

AC, *ACL*, and *MI* cables can be encased in poured concrete. These abbreviations stand for *armored cable*, *armored cable lead shielded*, and *metal shielded*, respectively. AC, ACL, and MI cable are designed for use in concrete. They stand up under heat during curing and corrosion from alkali and minerals in the mix.

It's usually cheaper to bury cable than it is to run wire in conduit, but buried cable has a disadvantage. If wire in conduit has to be replaced, it's usually easy to pull the old wire out and install new. Burying new cable can

be a major project. I recommend you use conduit for all buried and embedded applications. The wire is cheaper, replacement is easier, and you'll meet code requirements without any problems.

Use plastic-coated cables outdoors for low voltage lighting (less than 49 volts AC). Malibu lights and similar systems use 12- or 24-volt circuits, so plastic cable is acceptable. For fixtures that use regular 110 volt AC power, use AC or MI cable.

... Before You Dig

Be careful when you're digging footings and foundations for fences and walls. There might already be underground wiring or plumbing (water, sewer, natural gas, propane) in place. Telephone and electrical service lines should be in conduit, but you may find some that aren't. Regardless of the state, call 811 before you dig (www.call811.com). This connects you to your local call center. Always call at least 48 hours before you dig. They usually mark the location of their lines. Look for a yellow caution tape buried over the lines, about 18 inches under the ground. There should also be a piece of 2 x 10 lumber buried about 12 inches above the lines, but don't count on that.

Pulling Wire Through Conduit

Conduit is installed without any wire in it. Once it's installed, you pull the wire through it. The method depends on the type of conduit you're using. With flexible conduit, you snake a flexible wire (sometimes called a *fish line* or *fish tape*) through the conduit, attach conductors to the line, then pull the line back out until the conductors are pulled all the way through. Pulling wire is easier if the bends in the flexible conduit have a minimum radius of 14 inches. It also helps to use talc or commercially-available pulling lubricant on the wires. *NEC* Article 348.24 specifies code requirements for bends using flexible conduit.

If you're using rigid conduit, install *junction boxes* at each turn, so you can pull the wire from junction box to junction box. Don't cut the wire at the intermediate boxes unless you're branching to a second or third location. You may need a helper at each box to help guide and feed the wire so it doesn't get tangled.

Support for Conduit

When you install conduit above ground — suspended below a fence rail, for instance — be sure to secure it adequately. *NEC* Article 314.23 gives the maximum distances between supports. I suggest no more than 36 inches for all types of conduit. At terminal locations for motors, lamps, or switches, put a cable support within 12 inches of the box or fixture.

Buried Cable

When installing longer runs of buried cable, I use a small gas-powered trencher with digging blades on a revolving wheel. A trencher makes short work of digging a 6-inch-wide, 2-foot-deep trench for cable. It will cut through most soils and many tree roots. You can cut a 50-foot-long cable trench in less than an hour. Depending on what you pay for labor, it doesn't make sense to hand dig a trench that's much more than 10 feet long.

"A trencher makes short work of digging a 6-inch-wide, 2-foot-deep trench for cable. It will cut through most soils and many tree roots."

Use watertight conduit outside — not thin wall electrical conduit and fittings or rigid conduit, both of which are restricted to indoor use, *unless* they have watertight fittings. Flexible BX type conduit isn't permitted in wet areas, with one exception: that of connecting a motor to a junction or cut-out safety switch box. PVC Schedule 80 conduit is permissible. PVC conduit uses solvent welded (glued) fittings. Metal conduit should be connected with fittings that have rubber O-ring compression seals.

Junction Boxes

The *NEC* requires that you leave six inches of unshielded wire inside any junction box where you connect to the load. That means if you're using shielded cable, you have to strip the shield and leave six inches of unshielded wire inside the box. That allows some slack in case you have to cut the end off the wire to replace or repair the load device. You'll still have enough wire to splice into; otherwise, you might have to pull a new length of cable to the box.

Junction boxes are covered by the code, also. There must be a required amount of free air space inside them for working and cooling purposes. As a rule of thumb, use a 2" x 4" box to connect a single load device to the line. Use a 4" x 4" box for up to three devices. Article 314 of the *NEC* lists box sizes and the wires they'll accommodate. Allow three cubic inches of space inside the box for each wire. For example, a 4" x 4" by 2⅛" box contains 30.3 cubic inches. That's enough space for 15 #14 wires, 12 #10 wires, or 10 #8 wires.

When you buy junction boxes, they don't have any holes for the wires, only *knockouts* (circular indentations) on all sides. Knockouts are easily removed with the tap of a pointed tool. But don't just randomly remove them. Most boxes have knockouts of several sizes, so knock out only as many as you need for the size conduit or cable you're using. Don't knock out any you won't use. The electrical inspector will reject the job if your junction boxes have unused holes.

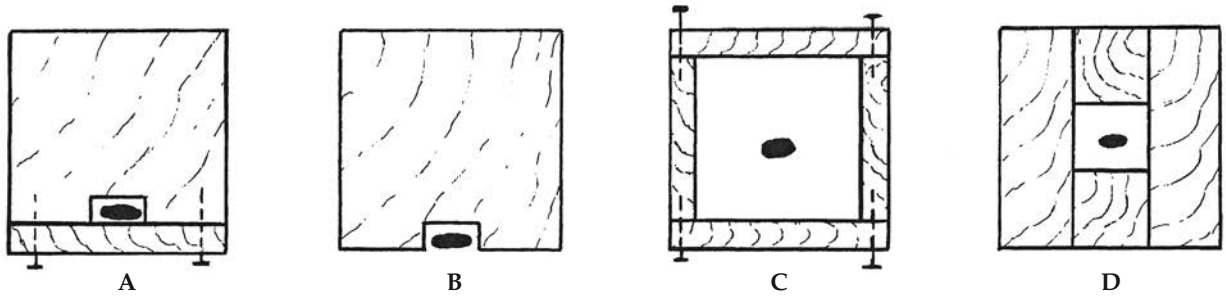

A 4" x 4" with dado for wire: Nail 1" x 4" to cover
B 4" x 4" with dado for wire: Paint post and wire to match or fill over wire with wood putty and paint
C 1" x 6" and 1" x 4" glued and nailed
D 2" x 2" and 2" x 4" glued and nailed

Figure 9-13
Hide wiring in fence posts

Junction boxes come in several sizes and types. Select those designed for wet areas or outside use. Some codes allow plastic boxes, some don't. I prefer molded plastic boxes since they don't rust or corrode. Covers and fittings for junction boxes are sold separately. Be sure to buy watertight covers and fittings for outside use.

Concealing Cable and Conduit

How do you run conduit up a wood post without it being noticeable? It's buried underground along the fence line, but what about where you want to install a lamp fixture on the post? First, make a 90-degree bend to the post. Then there are a couple of things you can do:

1. *Dado* a channel on the post for the cable, staple your cable into it, nail a face board over it, and then paint everything to match. To dado a channel, you need either a router with a straight bit or a radial arm saw with a set of dado blades. They're small chipper blades sandwiched between two outer cutting blades. You can buy the blade sets at most builder's hardware stores. Dado blades let you cut grooves from ¼ to 1 inch wide with one pass of the saw. Use electrical staples, which are about ⅝ inch wide and have an insulated flat top on them, to secure the cable.
2. Make your post from four separate pieces of lumber nailed together to form a square raceway. Your wire goes inside. Watch out for protruding nails that could puncture the wire. Figure 9-13 shows how to hide the wiring.

Fixtures

Remember that post lamp fixtures mount in various ways. Some bolt down onto a solid wood surface, while others slip over the post. The ones that

fit over the posts come with bases of different shapes and sizes to fit round or square posts, rough or finished lumber. The job is easy with the right fixture, and very hard with the wrong one.

Fixture Placement

What is the lighting intended to do? Illuminate a walkway? Provide security? Create a mood? Let's start with a mood. Mood lighting should be low voltage lamps with colored lenses. Place them so they shine on trees, plants, or walls. Lights along a wall should be about 10 feet apart.

You can also use low voltage systems for walkway lighting. Place the lamps about 18 inches high, again, about 10 feet apart. The fixtures should direct light down onto the walk. If you place walkway lighting on posts, be careful to direct lights down at the walk, not at eye level. A good height for walkway lighting is 48 to 52 inches.

"Mood lighting should be low voltage lamps with colored lenses."

Don't put driveway lighting too close to the drive where it's easy to hit with a car. Pay careful attention to the height, also. If the lights are too low, the driver can't see them; too high and they shine in the driver's eyes. Experiment and find the height your customer is most comfortable with. For driveways, it's usually between 24 and 30 inches.

Use flood lamps for security lighting. Wire these so they're switched on only when there's a suspected intrusion. (They consume a lot of electricity, so they're expensive to operate.) Position them so they flood the entire area with light, including corners and walls. Because these lights are very bright, they can be disturbing to motorists and neighbors — that's why they're rigged to come on only when necessary.

You can now buy inexpensive floodlight units that contain motion sensors. They turn on for a preset time whenever movement occurs within a certain range in front of them. This is handy for driveway or entry lighting. Check these out for the features your client wants. Some models don't have a sensitivity adjustment, so they may come on every time a person or vehicle passes the building. Also, get the ones with a daylight sensor, so they only come on at night.

You can also use low wattage perimeter lights that stay on all night. Forty to 60 watt lamps usually aren't disturbing unless they shine directly into someone's room.

Use timers or photocells to activate outdoor lamps. Mount photocells so they're not triggered by headlights or street lighting.

Make a plan view drawing of the property before you install security lights and alarms. Mark the sensitive areas such as walks, driveways, entries, and corners. Walkway lamps will light an area about five feet in diameter. A lamp placed on a post will light a 10- to 20-foot circle. Flood lamps shed light in a V-pattern for 30 to 40 feet.

Sketch in the light coverage on your plan. Once it's the way you want it, decide on the best paths for the cable runs. You may need several: one for low voltage lamps, one for line voltage lamps, one for the front yard, another for the back, and separate lines for entries and driveways. Include a fuse or circuit breaker in each line, a disconnect switch, and a timer or sensor. You'll want a disconnect switch so you can maintain the system without turning power off at the main.

Make the cable runs as short as you can to cut costs and increase performance. Then prepare your materials list from the plan drawing.

Plumbing

A plumbing code is enforced in your community just like the electrical code is enforced. I strongly suggest you follow that code.

Water lines are useful around property borders, not only for watering plants, but also for cleanup and fire protection. Here are some ideas to discuss with your customers that may put you ahead of the competition:

- Most homeowners will want to maintain the strip of property between their fence and the street. For this, they'll need a spigot or two.
- Put a hose bib on the wall around a pool or beside a driveway. These areas need hosing off frequently.
- Install a shower on the pool wall so the owner can rinse off after a swim.
- Mount a large wash basin with both hot and cold water in the side or back yard for washing off tools, pets, kids, and dad when he's through working on the car.
- Build a fountain at the back corner of the yard or beside the patio.
- Install drip irrigation along the fence line so sprinklers don't water the fence. Include some hose outlets to use in case of fire, when it might not be possible to get close to the building.
- If you enclose an area for trash containers, put a sprinkler head on the fence. It could prevent a disaster, and may lower fire insurance costs.

Plan the Layout

First, determine where the nearest water source is, and where you'll hook into the existing system. Now, use graph paper to draw a plan to scale. Locate all the connections and label them. Decide what kind of materials you'll use, and what size. You'll also need to know whether the lines will go above ground, underground, or inside a wall.

Turn off the water at the main valve and remove the existing spigot. Add a tee and reinstall the spigot on one branch of the tee. Put an in-line cutoff valve on the other branch of the tee.

> ***The best place to connect*** to the existing water line is often at the main inlet turnoff valve, the one where the pressure regulator is. There's usually a spigot there, too. The next best location is at an existing spigot that's close to where you want the new line.

You'll also need to install an anti-siphon valve (also known in the plumbing trade as a back flow preventer). This is a one-way check valve that prevents standing water in the new lines from siphoning back into the clean incoming water supply. Code requires an anti-siphon valve for all exterior water lines that may come in contact with the earth or that contain standing water.

Beyond the anti-siphon valve, you can add electrically- or manually-controlled valves, or simply branch out to the new lines. Sprinkler systems may require several branches and electrically-controlled valves. Most of these valves are plastic.

PVC pipe for outdoor installations comes in 10-foot lengths. Install it so it's protected from physical damage and freezing. In most places, it's acceptable to bury the pipe in the ground, 12 inches below the frost line. You should consult the local building official for the frost line depth for your local climate.

Use ¾-inch pipe for the main runs and ½-inch pipe for the branch runs. If you need more branches off the ½-inch pipe, use ⅜-inch flexible PVC tubing for the branches. You'll also need bends, ells, and tees.

Connecting PVC Pipe

First, sand the mating surfaces to remove the manufacturing glaze from the plastic. Then condition the connections with purple primer and wait a few minutes for the primer to set up.

Next, apply PVC cement as follows: Put a liberal application of the cement on one or both surfaces. Hold the pieces you're joining so that one of them is a quarter turn away from its finished position. Quickly push the two pieces together and twist them a quarter turn back to the way you want them. Twisting the pieces together helps spread the cement and prevents voids that can result in leaks. You can handle the pieces within minutes, but I suggest you don't pressure- or water-test them for at least 24 hours, after everything has had a chance to set properly.

If you're connecting a fountain, sink, or fire sprinkler to the line, put a cutoff valve near the fixture to make servicing easier. When you install irrigation sprinklers, you'll need cutoff risers. These are short lengths of pipe,

threaded at both ends. One end screws into a threaded coupler, and the other end screws into the sprinkler head.

Install a tee or an elbow at each sprinkler head location along the water line. Install the threaded couplers on the tees or ells. Insert the risers into the coupler, then attach the sprinkler heads.

Use pop-up sprinkler heads if they're to be installed at ground level. Water pressure makes these pop up, but they retract into the ground when the water is turned off. This makes it easy to rake or mow. Make sure that when they're up, they're up far enough. I've seen some that weren't.

Outdoor Sinks

Use sturdy mountings for outdoor sinks. They take a lot of abuse from do-it-yourself mechanics and dog-washing kids. If you're installing hot water as well as cold, you'll need a separate line, and a heater if it's not practical to connect to the house's main hot water supply. Insulate the hot water lines if you can. And don't forget an anti-siphon valve and a cutoff.

Your local building department may require that you use copper or brass for these lines, but *CPVC* or *PB* may be acceptable. CPVC is chlorinated polyvinyl chloride. It's gray/brown in color and is rated for hot water use. It's about three to five times more expensive than PVC, and requires different primer and cement. PB is polybutylene, a heat-resistant flexible thermoplastic. PB isn't acceptable everywhere, so check your local code.

If you must use copper lines, I suggest you use flexible copper tubing. First, install 1-inch-diameter PVC pipe with bends made to a radius of 12 to 18 inches or more. Then feed the flexible copper lines through the PVC pipe. There are two advantages to doing this: The copper won't corrode where it contacts the earth or concrete, and it's easier to make repairs. And, of course, copper tubing requires copper fittings.

Drain water from an outdoor sink is considered *gray water.* This means that it's not contaminated with human waste. Some localities will allow you to drain this water directly into the ground, while others require you to connect to the sewer line or provide a dry well.

Some codes may consider water supplied to an outdoor sink to be non-potable (not safe to drink). If that's the case, you'll probably have to post a sign to that effect.

Fountains and Waterfalls

In most places, garden fountains are required to be *recirculating* — the same water is used over and over. You'll need a pump, and your customer will probably want lights as well. Be sure to provide GFCI-protected electrical outlets for both of these.

Put a screen or filter on the recirculating drain or pump inlet to keep debris out of the pump. Install a spigot near the base of the fountain or waterfall, and include a small spillway to the pool so it's simple to replenish evaporated water. That way the owner can overfill the pool once in a while to flush away floating dirt and leaves.

Fire Sprinklers

Sprinklers are rated according to their type of use and the temperature that will set them off. Some will reset themselves after the fire is out, but others have to be reset manually or are one time-use and have to be replaced. Install an in-line cutoff valve just ahead of the sprinkler line. Put this valve in a secure location, or outfit it with a lock to prevent unauthorized or accidental shut-off.

If you're installing sprinklers over a trash collection area, the local code might specify the height to install the sprinkler heads above the trash bins. Most codes require the water feed line to be protected against fire damage and freezing or require a dry system. You can probably meet this requirement by embedding the water line in concrete or large diameter steel pipe.

Maintaining Electrical and Plumbing Systems

Lights, receptacles, alarms, and electric gates need periodic maintenance. So do spigots, automatic sprinklers, waterfalls, and fountains. Light bulbs burn out, sockets rust and corrode, switches and sensors fail or wear out, and motors need servicing. Sprinklers get clogged, valves leak, pipes freeze, and pumps burn out.

Even if you don't choose to do these things yourself, you should know something about them. I've been called on many times to do some trouble-shooting and make minor repairs.

Turn spigots on at least once a month, so they don't "freeze" in the closed position. (It would be smart to tell your customers this.) Noisy spigots are usually the result of dirt that's lodged in the valve. Leaky ones probably need a new washer. Remove the spigot and give it a good cleaning. Replace washers if necessary.

Sprinkler heads become clogged so they don't spray where they're supposed to. Sometimes turning them on high will clear them. Otherwise, unscrew the head from the pipe and clean out any dirt, bugs, and little snails that may have moved in.

Water pumps are self-lubricating, but the motor that drives the pump usually is not. Oil the motor bearings at least once every six months.

When you're called out for a repair, or if you're doing routine maintenance, look for physical damage, deterioration, blocked drainage and weep holes. Repair small things and do minor cleanups at no charge, as a gesture of goodwill that your customers will remember. Report any major problems you find, and write an estimate to repair them. To prevent busted water pipes, turn on outside faucets so they'll drip during freezing weather.

I know that this all seems easy, and you're probably wondering why your customers can't or don't just do this maintenance themselves. After all, what's so hard about changing a light bulb? Usually nothing. Usually. Except for outdoor lamp fixtures. They're often flimsy, made from steel with a brass or painted coating. They rust quickly. And they're usually mounted on a 6- or 7-foot post, so just getting to the bulb might take some planning. If the fixture isn't grounded properly, you may be in for a shock.

Here's my suggestion: Turn off the switch or, better yet, cut off the electricity at the circuit breaker box … especially if the fixture is controlled by more than one switch. Three- and four-way circuits can still be dangerous even when the light is off.

Look for knurled nuts on the top or sides of the fixture. Those usually let you gain entry. In some cases, when you loosen the nuts, the rails that hold the glass in place loosen also. If it looks like that's the case, wrap some masking tape around the fixture. That may help keep things in place. If the glass falls out and breaks when you're changing the bulb, guess who gets to buy new glass — if it's even still available.

Removing a Stubborn Light Bulb

Too often, when you start to unscrew a burned-out bulb, it won't come out. Either it just won't loosen, or the whole socket or lamp base moves. What's happened is that the socket has bonded to the fixture by *galvanic action.* Metal molecules from one material have migrated to the adjacent piece of metal.

Now what? First, turn off the power; then slip a small plastic bag over the bulb. Put on some thick leather gloves and grab the bulb as close to the base as you can. Then turn. You may have to hold the socket base at the same time to keep it from moving. Most of the time, the bulb will come out in one piece. If it breaks, the gloves should protect your hands and the plastic bag should contain the glass fragments.

If the bulb *does* break, you're left with the base of the bulb stuck in the socket. Be sure the power is *off.* Slip one tong of a pair of needle-nose pliers between the socket and the base of the bulb. Tighten your grip on the pliers. Turn the pliers through 90 degrees. This should bend the bulb base away from the socket without damage to the socket. Do this several times around the bulb base until it comes loose.

When you install the new bulb, coat the threads with *non-conductive* electrical heat sink grease. You can buy it from electronic hobby stores by the tube.

It keeps the new bulb from sticking the next time it needs changing. Put some more of this grease on the threads of the bolts that hold the fixture together. That makes the next bulb change *much* easier.

By the way, most outdoor fixtures are rated for bulbs only up to a certain watt size. Look for the maximum wattage stamped somewhere on the fixture. Don't put in a larger bulb than specified on the light fixture; it may melt the fixture, or cause a fire.

Repairing Outlets or Sockets

Use an *outlet tester* or a *VOM (volt-ohm meter)* to check outlets. You can get the outlet tester at most electronics stores. It looks like a three-prong adapter plug with three LEDs on the face. The LEDs glow to show if the circuit is live or not, whether the ground is connected, and if the hot side of the plug is wired correctly. As you look at a three-prong electrical plug with the U-shaped opening down, the right socket should be the hot, or voltage, side. The left side is the neutral, or return, side. The U is the ground. If the tester shows that this is not so, *turn off the electricity* and rewire or replace the socket.

To remove a socket or duplex receptacle, remove the screw in the center of the cover and then the two screws on the ears of the socket. Pull the socket straight out about five to six inches. Using a pair of dikes, clip the wires as close to the socket as you can. Strip the insulation from the wires with a wire stripper. Don't nick or cut into the copper wire. Strip about ½ inch of insulation from the end. There's a gauge on the back of the new socket to show you how much to strip.

Hold the socket in position with the U down and facing you. Tip the socket forward and insert the white wire in the top round hole to the left on the back of the socket. The black wire goes in the hole on the right. Bend the green wire (or the bare wire) into a U and attach it to the green hex-head screw terminal on the side of the socket. Push the socket into the box, and screw it into place.

For outdoor fixtures, the socket should have a water-resistant socket cover. The cover has a rubber gasket. Put a thin layer of silicon grease or caulk on the gasket and then install the cover. Turn on the electricity and test the socket with your outlet tester.

Your maintenance kit should include a VOM. Buy one with a 3- to 4-inch-wide meter. Cheap VOMs are available, but you get what you pay for. A better meter will have a longer life bouncing around in the back of your truck.

Here's how to use a VOM to check an outlet:

1. Set the range scale to 250 volts AC.
2. Insert one probe into the U, and the other into the left socket hole. You should get a voltage reading of zero.
3. Now insert the probes into the U and the right socket hole. The reading should be from 105 to 120 volts AC.

If the voltage is under 105 volts AC, suspect a bad connection, a bad switch, or a bad circuit breaker. If the voltage is over 120 volts AC, but far less than 230 volts AC, look for a problem in the wiring. If the reading is zero, the ground connection has failed. Rewire it.

To check a lamp socket, set the VOM on the 250 volts AC scale. (Checking 220 volt power on a lower scale could damage the meter.) Put one probe on the bare metal of the outside of the socket. Touch the other probe to a water pipe or a copper rod pushed into the ground. The reading should be zero. If the meter shows any deflection at all, lower the range scale to 100 volts AC. The reading should be zero. Keep lowering the range until you get a reading. If it's above 10 volts AC, suspect a faulty ground connection. This is a dangerous situation. Correct it. Check the lamp base for a bare or green wire. Make sure this wire is attached to a water pipe, metal conduit, or ground rod.

Where there are several lamps around a property, test for *line loss.* This happens when wire is corroded, too small for the load, nicked or damaged. To check for line loss, first measure the voltage at the circuit breaker. Record this reading, then go to the most distant light or outlet socket. Measure this voltage and record it. The drop or difference between the readings should be from zero to a maximum of 2 or 3 volts AC. If the drop is from 3 to 8 volts AC, there's a potential problem. If the drop is over 8 volts AC, the problem already exists. Find it and correct it.

Use the *halfway* method to isolate the problem. Repeat the check on a fixture or outlet halfway between the circuit breaker and the last device you checked. If the reading is normal there, you know the problem is between that point and the end of the line. Otherwise, it's between that point and the breaker. You can continue to check midpoints within sections until you isolate the problem.

When you locate the problem, use the ohm meter part of the VOM to identify the cause. Turn the power off at the circuit breaker. Now, re-test the voltage with the voltage meter. It's important to re-test: You may have turned off the wrong circuit, or there may be a cross connection between two circuits. If you test a live circuit with your ohm meter, you'll have to buy a new meter.

On the voltage scale, *zero* means there is no voltage. On the ohm scale, it means there is a connection. A lack of a connection is indicated if the meter registers infinity (∞). Anywhere in between zero and infinity means there is a connection with a resistance. If you check both ends of a wire, or across a closed switch, or from a neutral to a ground, you should get a reading of zero or near zero. If the reading is several ohms or more, then there's a problem of high resistance. High resistance will cause the voltage to be lower on one side of the component than on the other side. If the reading is infinite, try moving your probes. You may not be making a good connection.

If the reading is infinite after you try several test points, the item you're testing is *open* and won't conduct a current. Check switches in both the off and on positions. Replace the bad component with a new one. Switches and AC sockets are inexpensive, so keep a few in your tool box.

Maintaining Gates and Security Systems

Whether or not you install them, you may be asked to service automatic gates. They're relatively maintenance-free if they're tuned up regularly. Motors and chains should be oiled at least every few months. Clean trash and dirt from motors, chains and tracks. Oil rollers and wheels. Check for proper operation of rollers, motors and electrical circuits. Check for proper tension on the drive belt or chain.

Alarm systems require maintenance, too. First, make sure they're armed and respond when they're supposed to. Test key and button controllers. Lubricate keyholes, especially after wet weather. Use the DC volt meter on your VOM or the ohm meter to check sensors that don't work.

To maintain electrical fences, check for loose, broken, cracked, or missing insulators. You should be able to locate the manufacturer's name and part number on one of the remaining good insulators on the fence line. Most insulators simply thread out or unbolt from the post they're installed on. Insulators are available from agricultural suppliers or feed and grain stores. Cut back any bushes, grass, or tree branches that may contact the fence. Turn the power off before you do any of this, of course.

Make sure that all wire mesh and chain link fences are properly grounded. Metal fences both attract and conduct lightning. Make sure there's a ½-inch copper rod driven at least 6 feet into the ground for every 150 linear feet of fence. Be sure the clamps that tie the fence to the ground rod are secure. (Metal fence posts can themselves serve as a ground rod, if at least 6 feet of their length is buried.)

In this chapter, I gave you some very basic information about plumbing and electrical work as it applies to fence and wall contracting. If you decide to offer these services, do your homework. Check out local codes, and learn the latest tricks and techniques of each trade. Read about these subjects — the order card in the back of this manual is a good source for books.

Visit electrical and plumbing suppliers, talk to the people there, and pick up the free flyers. You can have some fun, and you'll learn things that will make money for you.

Chapter 10

Retaining Walls & Stone Walls

FENCES AND ORDINARY WALLS keep people, animals, and things in or out of certain areas. Retaining walls protect people, animals, and things by keeping land or water out of certain areas. Retaining walls can stop landslides from destroying places such as roadways, parking structures and building lots. They can be used to create raised planter enclosures, prevent soil erosion, and keep unwanted sediment from filling bodies of water. Just as the purposes for retaining walls are different, the ways they're built are different, too.

The earth we live on lets us use it in countless ways. We can build on it, dig it up and move it, burrow into it, level it off, and pile it up. The problem with earth is that sometimes it moves by itself … and without warning. When earthquakes and avalanches strike in populated areas, they have the power to devastate whole cities and towns.

Water also takes its toll. Mountains of stone fall down during heavy rains and in the spring when the snow thaws. Rivers, lakes, and oceans rise and fall when it rains, or when the moon's gravity pulls at them. And sometimes they flow right through homes and businesses.

Retaining walls and dikes help control this movement of earth and water. Most fence contractors can build small retaining walls and dikes and make money on them. Leave the big ones to heavy equipment operators and engineers.

Earthen Barriers

Some slopes have their retaining walls naturally built in. You often see those in residential developments where the lots are on hilly ground. Grass is planted on the level section and ground cover on the slope, to hold the earth in place when it rains. I'm sure areas like the one in Figure 10-1 are familiar.

Figure 10-1
Slope stabilized with vegetation

Figure 10-2
Terraces with stone

On steeper slopes, you can grade to create a series of steps, or *terraces*. Figure 10-2 shows a terraced hillside.

Terraces lessen the force of flowing water, and decrease the amount of erosion and runoff. You can protect the terracing either with plants or by reinforcement with retaining walls.

Figure 10-3 shows a typical residential lot on a hill. The home builder has to contain the dirt at both the front and back of the lot. This is where your talent for building retaining walls will be in great demand.

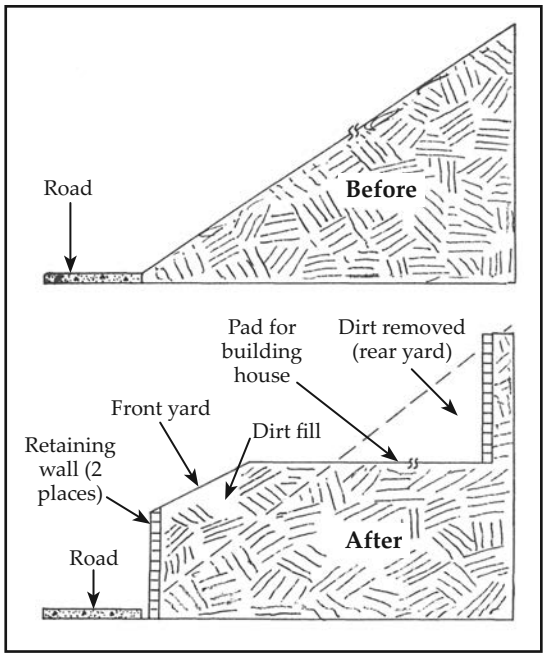

Figure 10-3
Residential lot retainers

Wood Retaining Walls

The most common type of retaining wall you'll be asked to build is a wood wall for planters and gardens. There are basically two types of wood retaining walls: vertical-board and horizontal-board.

Vertical-Board

A vertical-board wall is stronger than a horizontal-board wall, but regardless of the type, always use treated lumber and galvanized nails. The following instructions will make it easy for you to build a good, sturdy vertical-board wall (see Figure 10-4):

- Begin laying out the wall with stakes and a stringline for the straight portions. A garden hose is handy for outlining the curved parts.

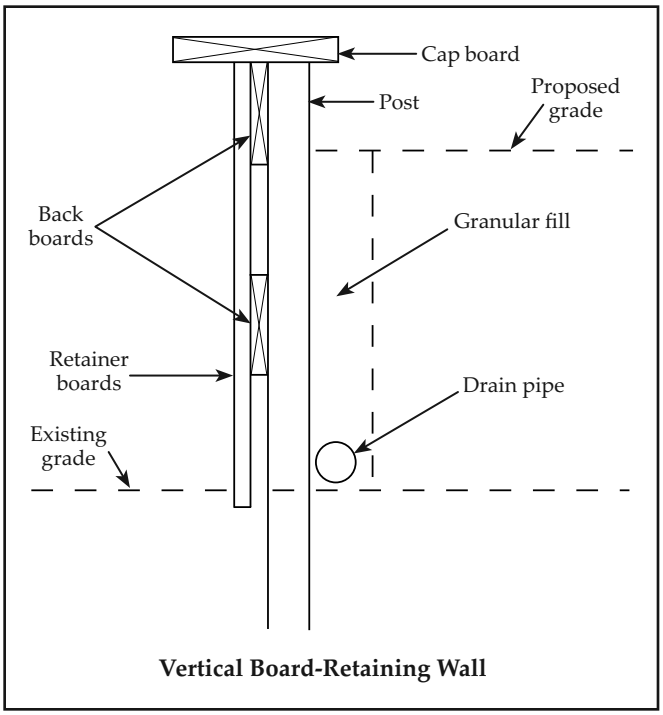

Figure 10-4
A good example of a vertical-board retaining wall

- Next, install 4 x 4 posts, using two posts at each external corner and one at each interior corner. Place intermediate posts no more than 4 feet on center.
- Dig the post holes at least 10 inches in diameter and deep enough to accommodate the length of post under the ground surface, keeping in mind that half the post should be underground.
- If you have to dig down past a frost line, you'll have to dig larger and deeper holes. Dig each hole to accommodate a layer of sand or gravel at the bottom of the post, to help drain water.
- Pour and mound the concrete 2 inches above grade and round the top. This will help shed water away from the post. Allow two or three days for the concrete to cure before you finish the rest of the wall.
- Next, install horizontal backboards at the center and top of the posts using 16d galvanized nails, making sure that all joints butt at the posts. This will help prevent a breach failure.
- Install the vertical retaining boards, edge to edge to the backboards. Allow each board to go one inch into the ground to help prevent toe failure.
- To extend the life of the wall and reduce water pressure, install landscape fabric or filter cloth behind the wall. Also, as you backfill behind the wall, place the soil in lifts, allowing room for a 4-inch perimeter layer of sand or gravel to help drain water.
- It's also a good idea to drill weep holes at the bottom of the wall on 4-foot centers, or you can place a 4-inch perforated drain pipe (toe pipe) sloped at 2 percent along the bottom of the wall.
- To make the wall more attractive and provide seating, install a 2 x 8 cap board at the top of the wall.

Horizontal-Board

Building a horizontal-board retaining wall is similar to building the vertical kind, but don't make this type of wall if you need one that's over 2 feet high.

No backboards are required on a horizontal-board wall. Install 2 x 6 retaining boards horizontally using 16d galvanized nails, making sure each joint occurs at posts.

With either kind of wall, if you have heavy soil and rainfall, install tie rods anchored to deadmen or wood supports to help prevent top failure. Make sure to install tie rods or wood supports at the top of each post and into the soil at a 45-degree angle.

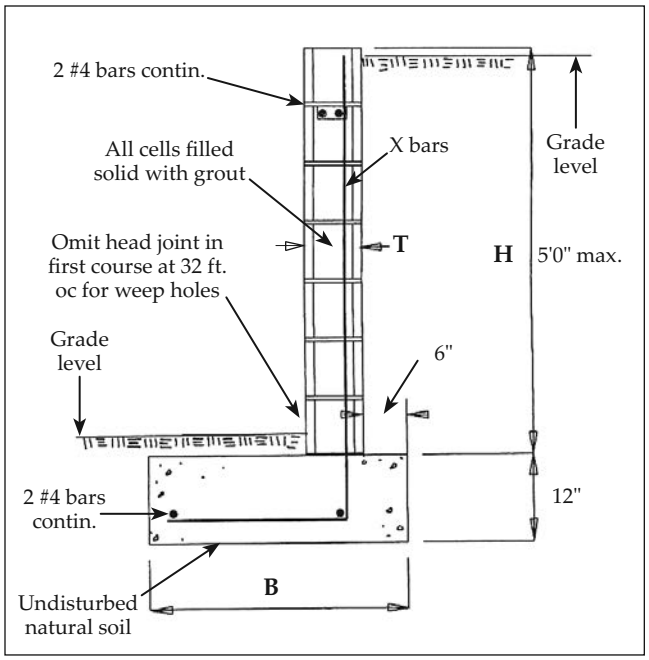

Courtesy of Max Schwartz

Figure 10-5
Concrete block retaining wall with toed-out footing

Concrete Block

Earth compacts and expands; it moves both vertically (up and down) and laterally (sideways). It's composed of various types of soil — each of which acts differently from the others. It may be very dry, or saturated with water to form underground rivers. You may need to hire an engineer to determine soil type and build a retaining wall that will hold it in place. Be sure to hire an engineer to design any retaining wall. An engineer will design a wall with a safety factor of 1.5 against lateral sliding or overturning.

One of the strongest types of retaining walls is concrete block. The following was graciously loaned to me by Max Schwartz, author of *Basic Engineering for Builders*. (The information is quoted directly, except that the figure numbers were changed for this book.)

> Concrete block makes an economical retaining wall. Retaining walls withstand the pressure of the retained soil and superimposed loads, or surcharge. You should always provide weep holes or open joints near the bottom of a retaining wall to drain the retained soil. The horizontal pressure of the retained soil is called 'equivalent fluid pressure.' This means that the soil is equivalent to water weighing 30 pounds per cubic foot instead of 62.4 pounds per cubic foot. For most drained soils, you design for a minimum fluid pressure of 30 pounds per square foot per foot of height.
>
> The retaining walls shown in Figures 10-5, 10-6, 10-7, and 10-8 show the size and reinforcement for retaining walls of varying heights and footing arrangements. Figure 10-5 shows a toed-out footing with the heel of the footing near the wall, or stem. Figure 10-6 shows a toed-in footing with the toe near the wall. Figure 10-7 is similar to Figure 10-5 except it's higher than 5 feet. The wall is made up of 12- and 8-inch concrete blocks. Figure 10-8 is similar to Figure 10-6 except it's also higher than 5 feet.

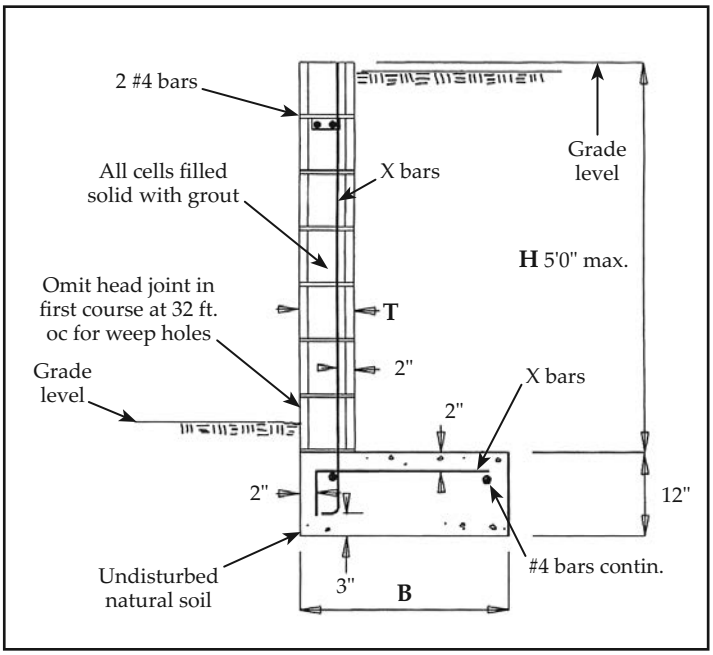

Courtesy of Max Schwartz

Figure 10-6
Concrete block retaining wall with toed-in footing

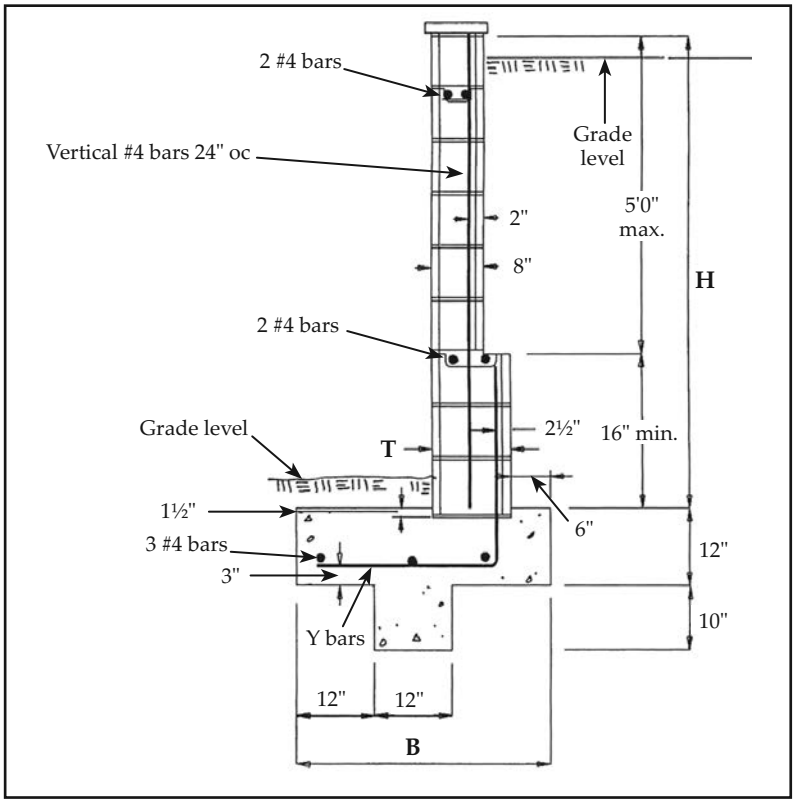

Courtesy of Max Schwartz

Figure 10-7
Concrete block retaining wall over 5 feet high with toed-out footing

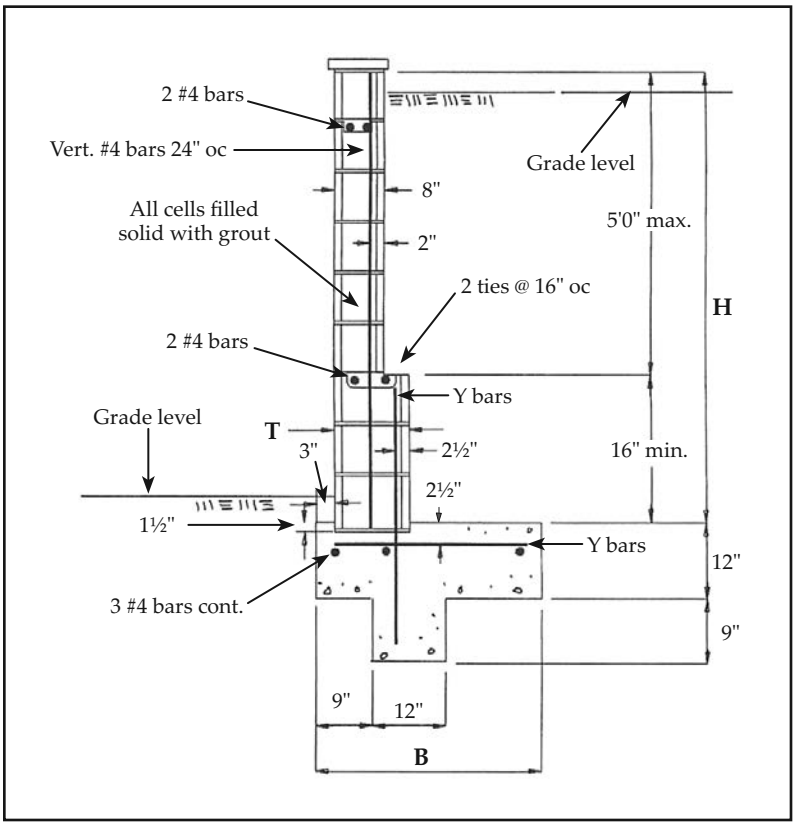

Courtesy of Max Schwartz

Figure 10-8
Concrete block retaining wall over 5 feet high with toed-in footing

Figures 10-9 and 10-10 give the various dimensions and reinforcement for these four types of retaining walls. These figures are based on a soil bearing value of 1,000 pounds per square foot and a level grade at the top of the retaining walls. The concrete in the footing has a compressive strength of 2,000 psi and the concrete blocks are Grade 'A,' per ASTM Specification C-90. Most building departments hand out standard details for walls up to 4 feet in height. For walls higher than 4 feet, you can buy publications that show details of retaining walls from 4 to 8 feet high. One of these is a booklet called the *Concrete Masonry Design Manual*. It's published by the Concrete Masonry Association of California.

You can use these publications to make preliminary designs and cost estimates but the plans you submit for a building permit require an engineer's stamp. For walls over 8 feet in height, you should hire an engineer."

Basic Engineering for Builders is available for ordering from Craftsman Book Company, https://craftsman-book.com.

H (feet)	T (inches)	B (feet-inch)	X bars	Y bars
3	6	1′9″	#3 @ 32″ o.c.	
4	8	2′2″	#4 @ 48″ o.c.	
5	8	2′9″	#4 @ 24″ o.c.	
6	12	3′3″		#4 @ 24″ o.c.
7	12	3′10″		#4 @ 16″ o.c.
8	12	4′6″		#5 @ 16″ o.c.

Courtesy of Max Schwartz

Figure 10-9
Concrete block retaining wall — toed-out footing

H (feet)	T (inches)	B (feet-inch)	X bars	Y bars
3	6	1′10″	#3 @ 32″ o.c.	
4	8	2′6″	#4 @ 48″ o.c.	
5	8	3′0″	#4 @ 24″ o.c.	
6	12	3′8″		#4 @ 24″ o.c.
7	12	4′8″		#4 @ 16″ o.c.
8	12	5′3″		#5 @ 16″ o.c.

Courtesy of Max Schwartz

Figure 10-10
Concrete block retaining wall with heel-out footing

You can strengthen any retaining wall by strengthening the soil behind the wall. Use horizontal polyester mats placed in layers behind the wall and secured by J-hooks or anchor systems. This is called mechanically-stabilized earth (MSE). MSE allows you to use steeper slopes, reducing land usage. And designers can design concrete walls using less reinforcing steel and concrete. As you backfill behind the wall you install the mats. They're available in up to 18-foot widths and various lengths. Installation goes quickly.

Pouring a Concrete Retaining Wall

Concrete walls *must* be designed by a structural engineer and Figure 10-11 shows why. The width of the wall, size of the footing and type and amount of reinforcing steel depends on the wall height. For example, if the "H" dimension of the wall is 5 feet high, the thickness of the footing (D) must be 10 inches and the wall thickness (B) must be 8 inches. The width of the footing (A + B + C) must be 8" + 8" + 27" = 43 inches. The total number of top and bottom horizontal rebar in the footing (F and L) is ten #5 bars. The outside-of-wall vertical dowels must be #4s set horizontally on 12-inch centers (see drawing), and the inside-of-wall dowels (V) must be #5s set on 16-inch centers. The horizontal inside and outside rebar in the wall must be #4s set on 12-inch centers, vertically.

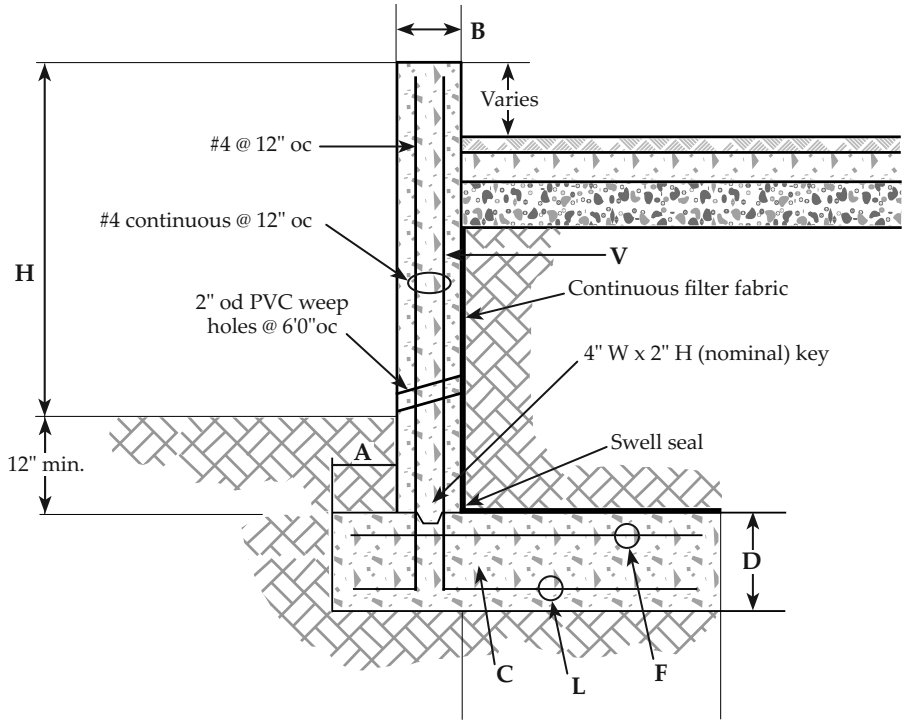

Table 1 — Retaining Wall Typical Section

H	D	C	V	F	L	B	A
3′ or less	10′	12′	#5@16′	5#5	5#5	8′	8′
4′	10′	20′	#5@16′	5#5	5#5	8′	8′
5′	10′	27′	#5@16′	5#5	5#5	8′	8′
6′	10′	34′	#5@12′	6#5	5#5	8′	8′
7′	12′	42′	#5@12′	6#5	5#5	12′	12′
8′	12′	54′	#5@8′	6#5	5#5	12′	12′
10′	12′	54′	#6@12′	8#5	6#5	12′	24′
14′	16′	71′	#6@8′	11#5	8#5	16′	33′

Figure 10-11
Concrete retaining wall design

Once the entire wall is cured, remove the forms and waterproof the back side of the wall. Then backfill behind the wall. Use small stones or gravel, from 12 to 24 inches deep, for the bottom part of the backfill.

Some concrete retaining walls have a base wider than the top. Figure 10-12 shows one possible design. This design gives added resistance to lateral force at the base. This is called a *battered* wall.

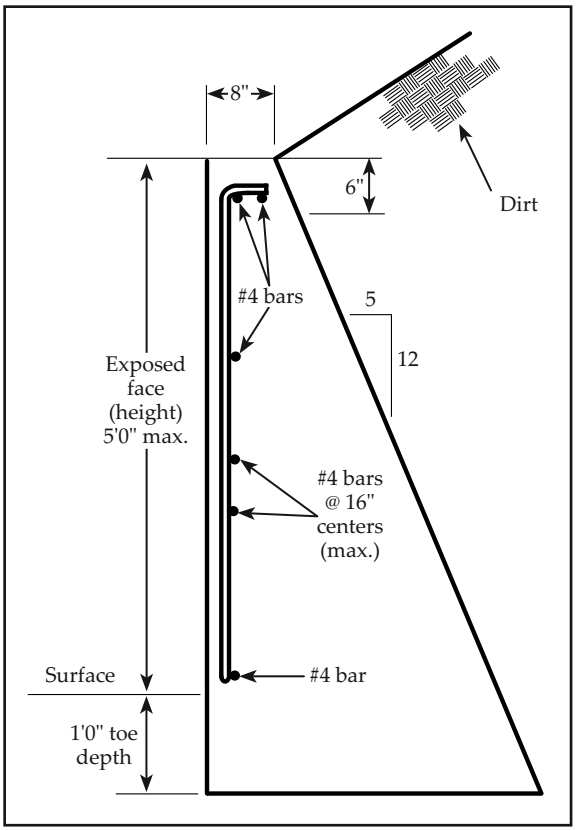

Figure 10-12
Battered concrete retaining wall

Figure 10-13
Timber retaining wall in failure

Retaining Walls from Other Materials

Since retaining walls can be built out of so many materials, it just makes sense to choose those that are readily available. Not too many of your customers will want to pay a big shipping fee for some exotic timbers when you can pick them up something locally that will make a great retaining wall for a fraction of the price.

Railroad Ties

Figure 10-13 is a low-cost retaining wall made from used railroad ties. This type of wall should be no more than about 4 feet high. Interlock the timbers and spike them together through predrilled holes. You can buy drill bits made for telephone linemen to drill holes up to 14 inches deep. Then drive the spikes in from the top of each piece of lumber as you stack them. For extra security, you can spike the end pieces to the side pieces they butt up to.

As you can see in Figure 10-13, this wall is almost in failure. Why? Because the builder used spikes that were too short and toenailed, instead of driven through each timber. Also, the vertical supports weren't set deep enough into the ground and were spread too far apart. Notice the movement that occurred where the tie ends were butted together. This is the result of top and breach failure.

You can use the same materials for higher retaining walls, but you fasten them together differently. First, you have to dig and pour a foundation — just like you would for a block wall. Then, insert rebar into the foundation every few feet, but never more than 3 feet apart. Check your local building code for the spacing required in your area. Remember, you can't put in too much rebar, but you can put in too little. Here's the rule of thumb I use: The distance between rebar shouldn't exceed three times the thickness of the wall. So for a 6-inch wall, I'd space the rebar 18 inches apart — *unless the building code calls for them to be closer*. Drill the

Figure 10-14
Peeler log wall

timbers and set them down over the rebar. You can build a wood retaining wall up to 8 or 10 feet high this way.

Caution: *Always* check with your local building department when you build retaining walls over 3 feet high. And I recommend that you get help from a qualified engineering firm before you build a wall over 8 feet high. Some localities require that an engineering firm design these walls.

You should have a copy of the code adopted in your area, but it's still a good idea to check with the inspector. What you need is his *interpretation* of the code.

Peeler Logs

You can build low retaining walls out of peeler logs (see Figure 10-14). They don't have to be treated for this application. Set the logs into the ground about 3 feet deep. Since most peeler logs are sold in 8-foot lengths, you can only build a wall 5 feet high. Coat the part that will be buried, as well as the back side toward the fill dirt, with a ¼-inch-thick layer of asphalt. This protects the logs against water, rot, and insects. You can build the wall at random heights, or you can steady the logs during assembly and backfilling by nailing a 2 x 4 horizontally across the top of the row. That will keep all the logs in a straight line. Then brace the row with a few more 2 x 4s during backfilling to keep it plumb.

Figure 10-15
A block wall coated with stucco

CMU Block

Figure 10-15 shows another good idea. Here, the retaining wall is made from CMU block coated with stucco. You can fill the area behind a wall like this with dirt, or leave it at grade. If there's a tree behind the wall, don't backfill dirt against the tree trunk — you'll kill the tree. If necessary, build a second, smaller wall around the tree and then fill the area between the inner and outer walls with dirt.

Figure 10-16
Poured concrete retaining wall

Concrete Poured in Place

In Figure 10-16, the retaining wall is made from poured-in-place concrete. You'd use both horizontal and vertical rebar in this, just as you would for building a foundation.

Riprap

Piled stone riprap is a very effective medium to retain hillsides. Figure 10-17 shows stone retaining a slope on the eastern shore of the Florida Inter-Coastal Waterway. The weight of the stone holds the hillside in place. An alternate to riprap is the use of gabions — galvanized steel, stainless steel or PVC-coated galvanized steel baskets filled with rock. Gabions reduce water energy and help prevent erosion.

Chain Link and Wire Mesh

You can also build retaining walls with chain link fencing and wire mesh. Those are often used on mountain roads where the amount of mud and stone that falls is minimal, but can still be a hazard to people and vehicles. A 4-foot-high chain link fence at the base of the hill catches the stones. Chicken wire or hardware cloth, attached to the chain link, catches smaller pebbles and mud. The chain link fabric supports the finer mesh wire.

Tires

Another easy-to-build retaining wall is made of old tires, which also last a long time. The wall keeps the land in place, of course, and it also uses a few of the millions of discarded tires that are piling up in landfills throughout the country. Stack the tires in staggered layers and fill each layer with soil as you go.

You can use old tires for *breakwater barriers* as well. A breakwater is a retaining wall that smoothes out wave action. Tie the tires together in a staggered pile and sink them. Use #12 solid core copper or aluminum electrical wire for your tie wire. Avoid steel wire because it will eventually rust. Once they're tied together, the tires will sink of their own weight. Keep building this pile until it extends 2 to 3 feet above the highest water line. Waves will break against the tires, thus protecting the area between the breakwater and the shore.

Well Tiles

Well tiles can also be used to build a retaining wall. Well tiles are circular concrete cylinders that line the interior of dug wells. They're about 3 feet in diameter and from 2 to 3 feet high. Stagger stack the cylinders upright against the hillside and fill them with dirt. The visual effect is especially interesting if you slope them up the hillside by offsetting each tile about 50 percent from the one below it. Then you can plant ground cover in the exposed earth in each row of well tiles.

Figure 10-17
Riprap retaining wall

Figure 10-18
Seawall

Temporary Retaining Walls

How do you build a retaining wall like the one in Figure 10-18? One way is to dig a trench about 15 to 20 feet away from the water's edge. The trench should extend down below the water line as follows: If the water will be 10 feet deep at the completed wall and the land elevation is currently 6 feet above

Courtesy of Florida Excavations

Figure 10-19
Sheet piling retaining wall

the water line, dig your trench 18 feet deep. That's 10 feet for the water depth, 6 feet for the land elevation, and a minimum of 2 feet for the foundation.

Now you can build your retaining wall in relatively dry earth. But keep in mind that you might have to install temporary sheet piling (see Figure 10-19) and provide water pumps to keep the excavation dry. After the concrete has cured, remove the sheet piling and backfill the land side. Use a backhoe to dig out the water side.

If this sounds dangerous, that's because it is. I'm not suggesting that you buy some sheet steel and start doing deep water projects. You'd probably drown. I just want you to know that there are ways to accomplish almost any job. There are firms with the proper equipment that specialize in installing sheet piling, and I highly recommend using one if the need ever arises. Also keep in mind that many local codes required sheet piling to be designed by an engineer.

Dikes

In the delta region of California, many thousands of square miles of land have been reclaimed from the Sacramento River. The flood plains and portions of the river bottom were isolated from the river by *dikes* — mounds of dirt about 20 feet wide at the top and 40 to 50 feet wide at the base. They can be anywhere from a few feet to 40 or more feet high. The reclaimed land is actually below the water level.

Where do you get the dirt? A lot of it you can bulldoze into place from the surrounding land or from mass excavations such as ponds or basements. You can probably take some from the water side with an excavator. But most of it will have to be hauled in. And you'll have to cover the completed dike with sod or ground cover to prevent erosion. If the water side is exposed to running water, you may have to cover it with stone or concrete.

If you need to divert water from a river or stream, dig another stream bed around the area where you have to work. Then dam the section you want to work in. Once you're finished, open the dam and refill the temporary channel with dirt.

Friction and Landslides

Try this. Rub your hand across your kitchen counter. Now wet a section of the counter and rub your hand across it again. Feel the difference? Your hand didn't move across the dry section as easily as it did over the wet section.

Friction is the reason. The same thing happens with the ground. During a dry spell, a hillside remains in place due to friction between the dirt granules.

But during a rain storm, friction is reduced as soil weight increases. That creates both lateral and vertical pressure. When you dig into a hillside, you open a space for the compacted dirt to flow. As the ground becomes saturated with water, the ground may begin to move laterally. This happens most often to layers of sand or clay. If these layers are near the bottom of the hillside cut, they flow out and leave the layers above unsupported. These upper layers col--lapse from their own weight and, before you know it, you have a landslide.

What can you do to prevent this? Here are a couple of solutions:

1. Old tires and well tiles help retain the soil because they increase surface friction, which resists lateral movement.
2. Gravel and stone layers offer more friction than sand or clay when moist or saturated. They resist lateral movement, so they need less lateral support. That's why retaining walls made of piled stone work so well. The highly irregular shape of most stones helps to lock them together.

Ice

Ice can cause landslides. Water seeps into the soil and stones, freezes, and expands. The force of this expansion is capable of cracking solid granite. When the ice thaws, a fracture is left in the stone. If the fracture is deep enough, some stone may be chipped off. Usually only the top 18 inches or so of the soil is affected. That's why retaining walls built to hold stone slides are only a few feet high. They're tall enough to catch the relatively small chunks of stone that break off and slide during the spring thaw.

You build stone slide walls 3 to 5 feet away from the base of the hill. All you need is a small catch area. Falling stone hits the ground in the catch space before it hits the wall. The ground absorbs most of the force, and the wall isn't damaged. The wall can be concrete, wood, or even wire or chain link. You'd usually set these walls in place on the ground or bolt them into place in stone. That way, it's easy to remove sections to clean out the catch area in case of a slide. For a hillside homeowner, a wall like this can keep not only stones but also mud and water from filling the back yard. You can build in benches or planters to make them more attractive.

Design and Building Methods

Figure 10-20 shows one way to stabilize a block retaining wall. Build the stabilizing anchor walls perpendicular to the retaining wall, then build walls in these trenches. The anchor wall sections help resist lateral forces. You can

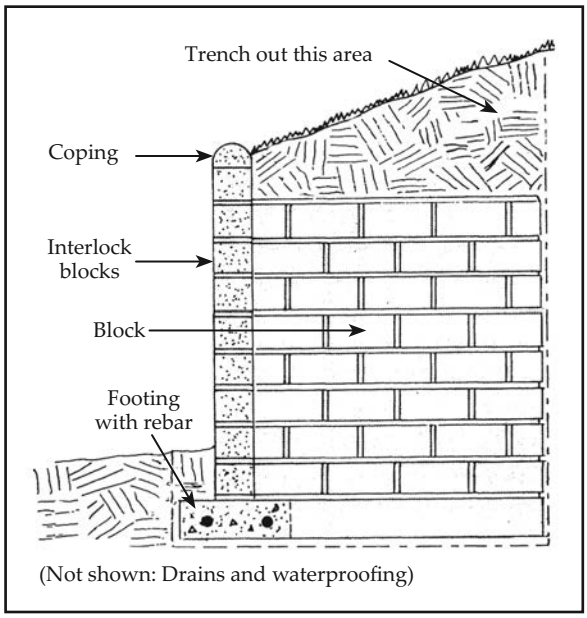

Figure 10-20
A perpendicular wall to stabilize a retaining wall

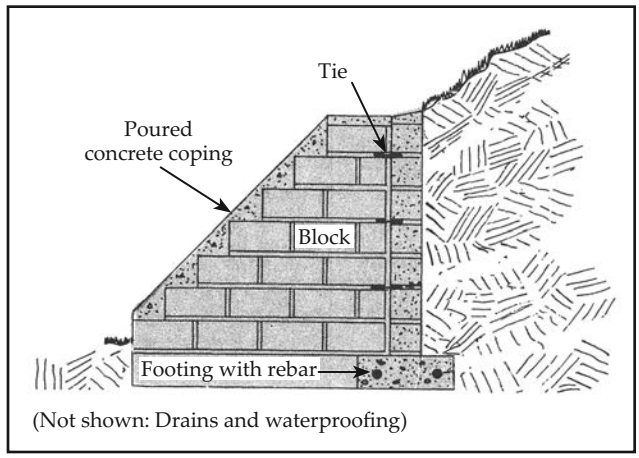

Figure 10-21
Supporting wall outside retainer

use the same principle to anchor poured concrete, concrete block and timber walls. Interlock the walls together where they join. Use rebar bent into an L shape to make the connection in poured concrete walls. If block retaining and anchor walls are built at the same time, interweave the blocks from the retaining wall and the anchor walls at the corners and use horizontal metal ladder reinforcing in the joints. This will strengthen the wall intersections.

The distance between the perpendicular walls is critical, since the loading is outward as well as downward. I would hire an engineer to determine this distance.

Figure 10-21 shows a reverse solution. Here, the perpendicular walls extend out from the face of the retaining wall to form braces. Although I show the brace extending the full height of the retaining wall, it's not always necessary to make it that high. A brace wall will normally be effective as long as it's at least 70 percent as high as the retaining wall. These braces reduce the usable area in front of the wall. But that may not be a disadvantage if the piers separate parking spaces, for example.

The coping (rake beam) shown in Figure 10-21 is poured concrete. Make a form with two strips of ¾-inch plywood held in place against the block with braces or large C clamps. Then pump the wall with grout and trowel the top smooth.

Both of these methods to stabilize a retaining wall work well, although each relies on a different physical principle. The "in the hillside" perpendicular wall works on friction. To move, the retaining wall would have to pull out the brace wall *and* all the dirt exerting pressure on it. The "outside the hillside" brace wall also works on friction, but it's only the friction of the brace wall and the earth under it. It's not as effective against horizontal movement, but it *is* better at keeping the retaining wall from toppling over.

No matter which kind you build, be sure to provide water drainage through the walls. Water buildup behind the wall exerts tremendous pressure and softens the dirt. Wet dirt has little friction or holding power. You can use weep holes, a bed of gravel, or drainage pipes.

Waterproofing a Block Retaining Wall

Figure 10-22 shows how to make a block retaining wall waterproof. The plastic sheet is 12 mil black polyethylene. You can use any hot or cold application asphalt waterproofing emulsion for the tar. And there are dozens of commercial waterproofing coatings to choose from for the plastic concrete.

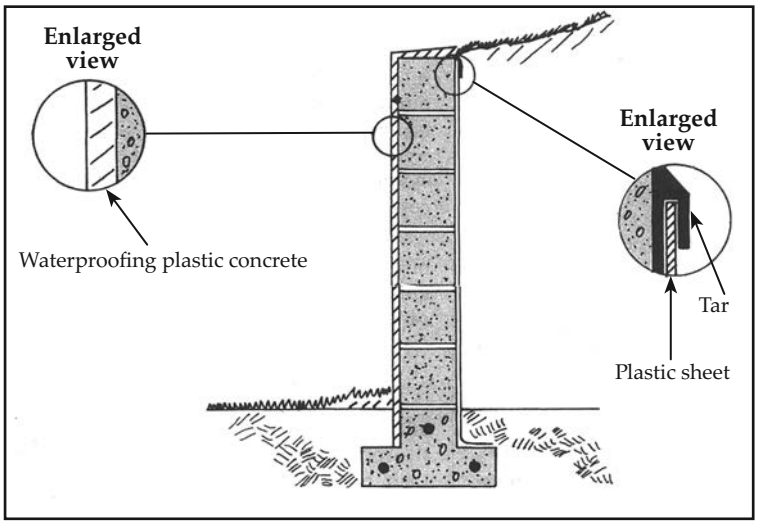

Figure 10-22
Waterproofing a block retaining wall

Using Concrete to Reinforce Earthen Barriers

Sometimes you'll have to cover a bank with asphalt or concrete to protect it from erosion or undercutting from water flowing along its base. Use at least 4 inches of material for this purpose. If you have a project like this with plenty of time to complete it, and you work near a concrete plant, you might be able to make a deal with the plant owner. He needs a place to clean out his trucks and dump excess concrete at the end of the day. You need the concrete, so you could probably work out a good trade. The only problem is that you'll have a crew at the site with no guarantee that concrete trucks will be arriving on a consistent schedule. Also, some portions of the bank might not be accessible to the trucks.

This really isn't a good idea, since you could end up with an incomplete pour in certain areas, creating "cold joints," which are unattractive and weaken the structure. I recommend that you provide expansion, or keyed joints, to prevent cracking. In colder climates, you'll probably also need to pour fiber mesh concrete or install welded wire mesh to help prevent cracking.

Figure 10-23 shows a hillside covered with concrete. Pour the slab in sections that are 3½ to 6 inches deep. To help you plan, remember that a 5-yard load from a ready-mix truck will cover 405 square feet to a depth of 4 inches. Bend coated No. 5 rebar (or purchase pre-bent bars) so they will be at a right angle to the slope and extend above it. The distance of this extension depends on the thickness of the concrete slab.

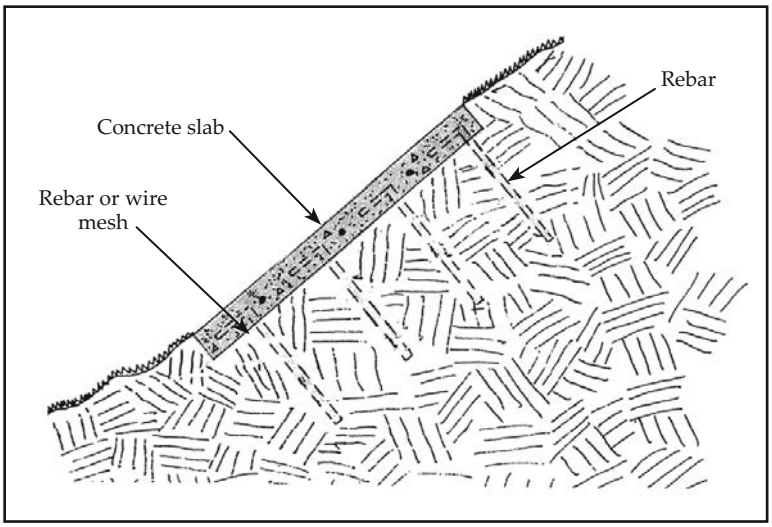

Figure 10-23
Concrete slab to retain a slope

Pound the rebar 6 to 10 feet into the ground, perpendicular to the face of the slope. Drive each bar so that each one will be in the center of the thickness of the slab. That way, the rebar will be embedded in the concrete. Space the rebar on 4-foot centers in all directions. Put wire mesh in the slab to prevent cracking. This wire mesh, designed specifically to embed in concrete, is available at most professional building supply centers. Check your local building code for specifics. You can use this method for slopes up to 45 degrees.

Here are a couple of tips to make pouring easier: First, start your pour from the top and work down, pushing the concrete downhill instead of uphill. This often means you'll have to pump the concrete where the slabs are inaccessible to concrete trucks. Second, keep each section to a workable size. I recommend sections 8 to 10 feet wide and not more than 30 feet long. To cover a very large area, form sections in a checkerboard design and pour into alternate sections. After they've cured for a few days, go back and fill in the other spaces. It might seem easier to pour a 30- by 40-foot area all in one shot — but you'd probably have cracked concrete in a few months.

To minimize cracking, incorporate expansion joints into the slab. Use a trowel with a V-shape in the middle. Just lay a 2 x 4 across the partly-set concrete as a guide, then use the jointer to cut a V every 4 to 8 feet in each direction. That way, if the earth settles, the concrete will crack through the weaker expansion joints where the cracks aren't apparent.

You should also consider "true" expansion joints. They're either plastic strips, ½-inch bituminous strips or redwood lumber strips separating each section. They provide space for the concrete to expand without buckling and cracking. Or you can remove the board forms after the concrete has cured and fill the joints with liquid asphalt or caulking compound.

Water Pressure

Water weighs 62.4 pounds a cubic foot. That means if you fill a container one foot square and a foot high with water, it will weigh 62.4 pounds (plus the weight of the container). If you make the container 4 feet high, the water will weigh 249.6 pounds. And the deeper the water, the higher the pressure at the bottom.

The bottom of a 1-foot-square by 4-foot-high container is 144 square inches (12 x 12), so to find the pressure of the water per square inch, divide the weight of the water by 144.

249.6 ÷144 = 1.73 psi (pounds per square inch)

When a liquid, including water, tries to seek its own level, it exerts force in all directions. The pressure is the same to the side as it is downward. That's why, if the 1- x 1- x 4-foot container of water is made of concrete block, it will leak — because concrete block lets water flow through it at pressures above 1.7 psi.

At higher points on the wall of the container, the pressure decreases until it reaches zero at the top. That's why dams are built with narrow tops and very thick bottoms.

You need to be aware of all this when you're building retaining walls, or you might just be building a big strainer.

Here's an example: Suppose the water behind a dam is 150 feet high. 150 feet times 62.4 pounds is 9,360 pounds. Divide by 144, and you get 65 psi at the bottom. That doesn't sound like too much until you consider that the dam is 100 feet long.

Now you have 100 times 9,360 (or 936,000) pounds of force trying to push the bottom of the dam outward. That's just at the bottom. If you add up the pressures at each point up the wall, you see that it's into the millions of pounds.

What does this mean to you when you're building a retaining wall? Let's think about a typical hillside residential lot. The builder had to dig into the hillside to make the foundation pad. The vertical cut is 24 feet deep. The soil layers are — top to bottom — topsoil and dirt, clay, compacted earth, gravel, stone, and sand. Let's say each layer is about 4 feet deep. The gravel layer is, therefore, 12 to 16 feet down from the top of the hill.

Now let's assume that there's a lake on the opposite side of the hill. The elevation of the water in the lake is 20 feet higher than the elevation of the top of the gravel vein. Gravel layers between compacted soil and stone are good conductors of water. In fact, a gravel layer can become a flowing stream (see Figure 10-24).

Lake water will try to reach the lowest level possible. The bottom of the gravel layer is 24 feet lower than the top of the lake (20 feet plus 4 feet of gravel). We know that water exerts force in all directions including sideways. We know that force is 62.4 pounds a square foot times the height of the water. Thus, 62.4 times 24 is 1,497.6 pounds per square foot. In psi, it's 1,497.6 divided by 144, or 10.40 psi. That's the water pressure at the bottom of that gravel layer. If the hillside cut is 50 feet wide, there's a problem. A fair-size river will be flowing into that lot.

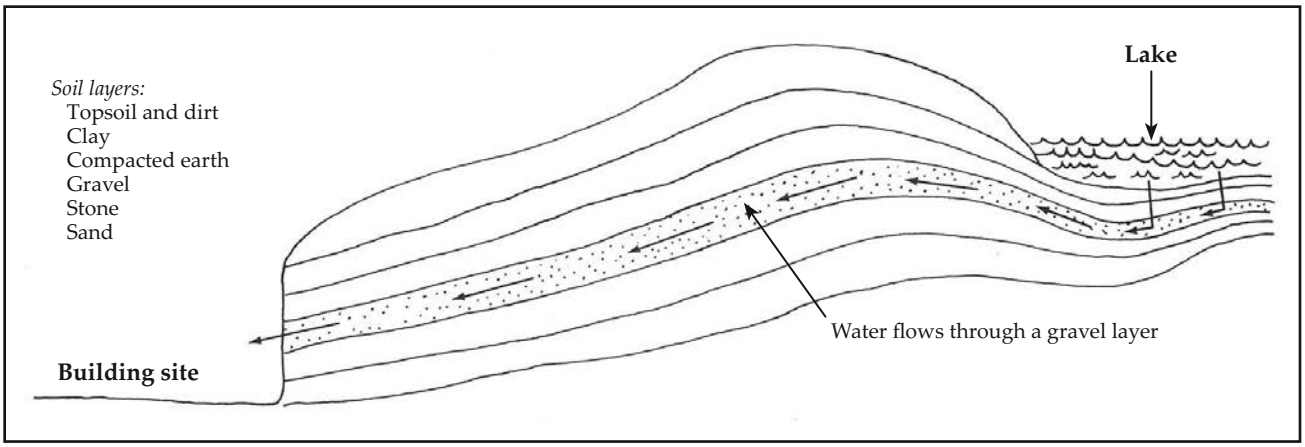

Figure 10-24
Plan for water pressure on the retaining wall

Use these calculations to help you decide on the material to use for this retaining wall. If you use concrete block, it will leak. A water pressure of 10.40 psi will push water right through the block. You could use several blocks to build up the thickness. How many blocks would it take? Divide 10.40 by 1.70. The answer is 6.11. You should use block stacked 7 rows deep. The average block is about 8 inches thick, so you would have 7 times 8, or 56 inches of thickness. That's not very practical.

Block leaks because it's porous. If you fill the block with compressed grout or concrete, it becomes quite resistant to the flow of water. You could possibly build this retaining wall with one row of 12-inch-wide, rebar-reinforced, compressed grout-filled concrete block. Or you could build it from rebar-reinforced poured concrete about 12 inches thick. Both of these should work. Grout and concrete can withstand pressures from 1,500 to over 3,000 psi. I wouldn't recommend timbers here, even though they would hold the soil in place. It's too hard to hold back the water.

That was an extreme case, with the lake directly above the building lot. But a layer of gravel can cover hundreds of square miles. The building lot could be 25 miles away and still get the force of the water from the lake. To put it simply, if you hit a band of gravel, design for water pressure from the highest water source around.

House foundations dug below grade are a form of retaining wall. Most areas have what is known as a *water table*, the level to which water will rise in an open pit. This is the level of ground water below the surface, usually in a gravel layer. In the summer and fall, the water table drops by several feet. In the spring and winter, it rises several feet. If you build a foundation or wall in the summer, the water table may be higher six months later.

Leaky basements are common in many areas starting in late winter and continuing throughout the spring. Be sure to provide adequate drainage lines around your wall. Coat the ground side of the wall with waterproofing asphalt. Coat the inside of the wall with a waterproofing cement.

Soil Properties

I've shown some examples of retaining walls and suggested how to design and protect them. Let's look at the soil under them for a bit. This information is important for foundations of all types.

There are many different soil types, with different properties. Gravel lets water flow through easily. Clay doesn't. Stones and gravel tend to stay where you put them. Sand and clay don't. You need to know the *compression strength* of the soil you're working on so your walls don't crack and collapse.

Compression strength refers to the amount of weight a square foot of soil can support before it moves or compresses to the point of becoming a liquid. Figure 10-25 is a table that lists the maximum *bearing load* for various kinds of soil. The bearing load is the weight of the structure being built.

Type of soil	Maximum bearing load permitted
Silt, wet	None
Silt, dry	500
Adobe	1,000
Clay, soft	1,000
Clay, sandy	2,000
Clay, hard	3,000
Sand, loose, fine	500
Sand, compacted, fine	1,000
Sand, compacted, coarse	1,500
Rock and gravel	5,000*
Rock, base rock, solid	40,000
* or 20% of the PSF it takes to crush it	

Figure 10-25
Type of soil and maximum bearing load permitted (pounds/sf)

See the chart to the right for weights of some common building materials in pounds per cubic foot.

Concrete, dry mix	130 PCF
Concrete, cured	150 PCF
Sand	105 PCF
Rock	105 PCF

Suppose you're building a concrete retaining wall 40 feet long, 8 feet high, and 1 foot wide. The foundation is 1.5 feet high and 1.5 feet wide. Can you build it on soft clay?

First, figure out how many cubic feet of material there are in the wall. Then multiply the answer by the weight of the material per cubic foot. The foundation is 1.5 × 1.5 × 40. Multiplying, we get 90 cubic feet. Multiply that by 150 pounds per cubic foot for the material. The answer is 13,500 pounds for the foundation.

Add to that the weight of the wall, (1 × 8 × 40 × 150 = 48,000), and the total weight for wall and foundation is 61,500 pounds.

The wall's footing is 60 square feet (1.5 × 40). You can see in Figure 10-25 that the maximum bearing load for soft clay is 1,000 pounds. The maximum weight then, for a structure that's supported on 60 square feet of ground, is 60,000 pounds. This wall is too heavy. The soil will compact under the weight and the wall may crack. You'll either have to lower the height of the wall, decrease its thickness, make the foundation wider to distribute the weight over a larger area, or change the soil.

My solution would be to widen the foundation. If you make the foundation 2 feet wide, it will weigh 18,000 pounds (1.5 × 2 × 40 × 150). Add that to the 48,000 pounds for the wall, for a total weight of 66,000 pounds. But now the foundation occupies 80 square feet of ground (2 × 40), which can support up to 80,000 pounds. That's more than enough for the 66,000 pound wall.

In some areas, you'll find *expansive soil*, such as clay — it swells when it's wet. If you build on this soil, chances are the soil will swell under your wall and crack it. You need to have a soil analysis done by a soils engineer.

There are two ways to handle expansive soil:

1. Dig below the expansive soil to build your foundation. The depth should be based upon the soils engineer's recommendation.
2. Remove the expansive soil and fill the trench with compacted coarse sand. Build your foundation on the sand, but below the frost line.

The *Uniform Building Code* requires footings to be a minimum of 12 inches below the frost line. Frost lines vary with climate. In south Texas, it's only one inch. But allow 72 inches in northern Maine. Your local building department will know the accepted depth for footings in your area.

... or Not

If you don't want to build a retaining wall at all, cut the slope at less than 1 foot vertical for each 2 feet of horizontal excavation. That's a 2:1 slope, or a maximum of 22.5 degrees. Most building codes don't require a retaining wall for a slope like that.

Stone Walls

Here are some things to consider when you plan to build a wall out of stone:

1. Is the material readily available?
2. Can you just stack it, or does it have to be cemented into place?
3. Do you have to build a foundation?
4. Is a drainage system necessary?

Field-stone rock walls have been used for thousands of years to mark boundaries and property lines. The builders of those low stone walls used the stones gathered when they cleared the fields for farming or pasture. Figure 10-26 shows a free-standing stone wall built to indicate a property line. The British even use the weight of a typical field stone, about 14 pounds, as a standard measure of weight. They call it a *stone*. So if you weigh 190 pounds in the U.S., in England you'll weigh 13½ stones, or 13 stone 8.

Field Stones

Field stones usually have an irregular shape, so they stack and hold fairly well. Some field stones and river stones have been worn smooth by ice, friction, glaciers or water. You usually have to cement those together to keep them in place.

Since you can find field stones and river stones on or near the earth's surface, they're relatively inexpensive.

Courtesy of Tiina Williams

Figure 10-26
Stone retaining wall

Quarried Stones

Stones you have to mine or dig up are more expensive. *Quarried* stones, as these are called, include slate, granite, marble, and volcanic stone. Even though they're often irregular in shape and stack well, you'll probably still want to cement them into place because of their costliness.

Slate and marble are cut from the earth in slabs or sheets. They can be cut to shape and are usually ground and polished. You'd use these as veneer over concrete block or poured concrete.

Figure 10-27
Artificial stone wall

Artificial Stones

Even though stones are plentiful, they're not a renewable resource; they took millions of years to form. Once they're used up, there won't be any more.

Inventive as always, man found a way to get around that problem. We've learned to mix colorful and decorative materials with cement to mold our own stones (Figure 10-27). Manmade stones aren't quite as hard or long-lasting as the natural kind, but they work well as a veneer. You can build a framework for a synthetic stone wall out of concrete block, poured concrete, or even wood.

Two things make artificial stones desirable as a building material. First, they closely resemble all kinds of natural stones. You can get "Hawaiian volcanic stones" in Rhode Island, without paying the freight.

The second advantage to manufactured stones is that they're available pre-shaped, so there's no cutting and no waste. Some companies not only supply the stones, but also number each piece. You follow their numbered

assembly drawing to put each piece into position. Presto, a stone wall! One supplier cuts grooves into their stones. You put metal clips into the grooves to hold the stones in place while you grout them. Pretty amazing.

Building Techniques for a Stone Wall

If you're building a stone wall that's less than 4 feet high, you can *dry stack* the stones. That means you just pile the stones on top of each other. Friction and their irregular shapes hold them together. If the wall is higher than 4 feet, you need to cement the stones together. That's called a *wet stack* wall.

One nice aspect of dry stacking is that it provides good drainage, since water can seep though the joints. Also, there's no need to build a footing beneath the frost line. You don't need a foundation. In freeze zones, the wall will rise and fall with the expansion and contraction of the earth it sits on.

"To prevent wobbling, install small stone shims in the problem horizontal joints. If the wall is a retaining wall, install deadmen. "

Excavate the trench deep enough for the soil to come to the top of the first stone course. Compact any loose soil in the trench before laying the base course. The base should be half as wide as the wall is tall. Use wide, flat stones for the first course.

Lay each succeeding course so that the vertical joints *don't* line up, since this would weaken the wall. To prevent wobbling, install small stone shims in the problem horizontal joints. If the wall is a retaining wall, install deadmen. These are stones laid vertically, and long enough to extend into the soil. As a good rule of thumb, lay a deadman for each 16 square feet of exposed wall face.

Don't attempt to build a dry wall with river stones. It won't hold together. If you must use it in a dry stack wall, cut or break the stones into irregular shapes first.

To cut stones, use a mallet and a chisel. But if you build many of these types of walls, you'll find it well worth the money to purchase a heavy-duty compressor and pneumatic stone chisels. If you look carefully at a stone, you should see some sort of grain line. Using your chisel, follow the grain line and apply short, sharp mallet blows. The stone should crack into two pieces. Wear eye protection when you do this. Slivers of stone fly off like shrapnel.

You must lay a foundation for a wet stack wall. Dig down to or below the frost line and start your wall there. A wet wall is a *monolithic* wall. That

means the combination of concrete and stones forms a single unit. It weighs too much to just rise and fall with the earth without cracking itself apart.

Battering a Wall

Batter means to slope the wall faces inward from the bottom to the top of the wall. This keeps the higher stones from falling. Their weight is fully supported by the stones under them.

If the wall is a freestanding divider wall, not retaining anything, it can be either a dry or a wet wall. If it's less than 2 feet high, its faces can be straight up and down. If it's over 2 feet high, you'll have to batter it. A dry wall requires a batter of 2 inches for each 1 foot of vertical wall height. A wet wall requires a batter of 1 inch for each foot of wall height.

Here's how to form a batter with a stringline, for a freestanding wet wall 5 feet high:

1. Cut four 1 x 8 boards 6½ feet long.
2. Call one end of the boards the *top* and measure 5 feet from that end of one board. At that point, measure in 5 inches from the edge of the board.
3. Cut a diagonal from that point back to the top corner of the board that's on the side you measured the 5 inches from.
4. Make a straight cut from the bottom of the board to the point where the diagonal cut begins. The remaining part of the bottom of the board will be 2½ inches wide.
5. Cut a point on the bottom end of the board. Then cut the other boards to match.

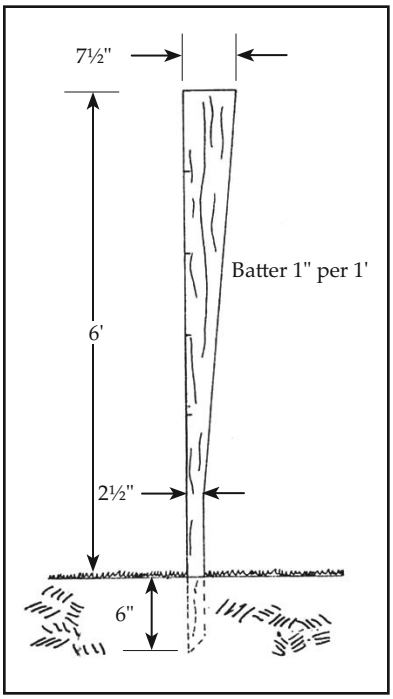

Figure 10-28
Make a batterboard

Figure 10-28 illustrates a batterboard.

Drive two of these boards into the ground at each end of the path of your wall. Sink them up to the point where the diagonal cut begins. You'll place the boards opposite each other, with the diagonal cuts facing each other. Make the distance between the boards where they enter the ground the width of your wall at the base.

Now string lines between the boards, one at ground level, and the other at the top. You'll place the stones within these stringlines.

If you're building a stone retaining wall, put the batter on the exposed surface only. The side of the wall toward the landfill is straight up and down.

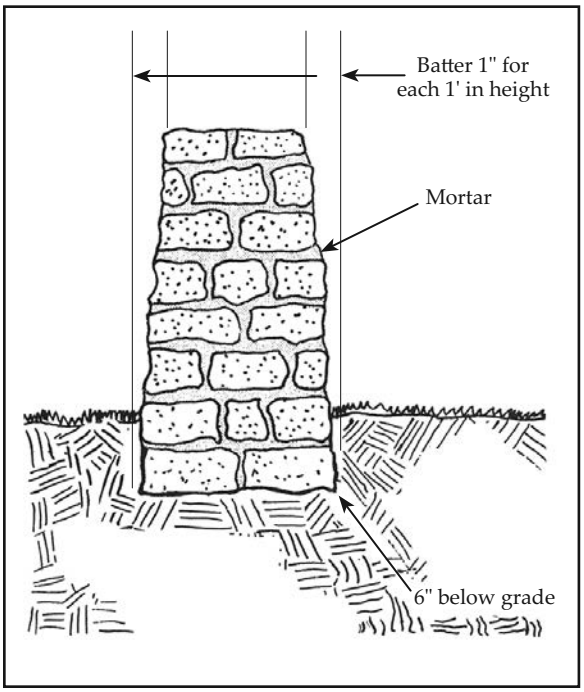

Figure 10-29
Wet stack freestanding stone wall

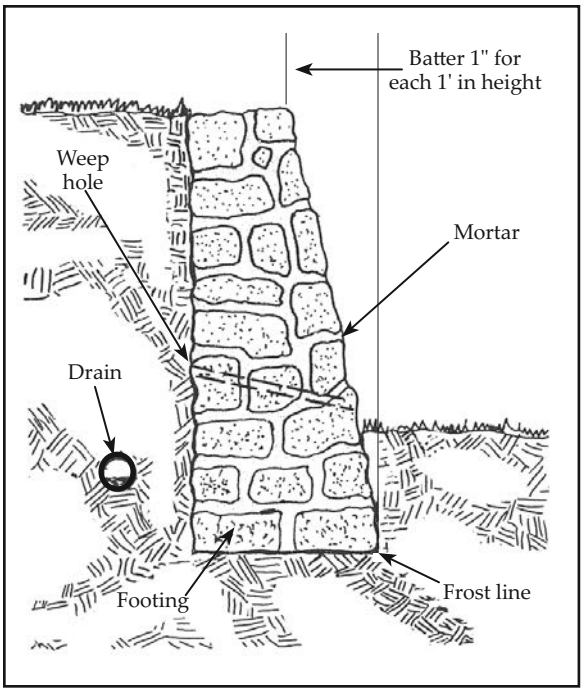

Figure 10-30
Wet stack stone retaining wall

Wall Base Width

The width of your wall at the base is determined by the size of the stones you're using. The top layer of your wall should be a minimum of two stones wide. Decrease the size of the stones as you build, with each succeeding layer made of stones smaller than those below.

Here's an example: Suppose your load has stones ranging from 5 to 10 inches in diameter. If you put two 5-inch stones side by side on the top layer, that's 10 inches. If you're building a wet wall, allow another inch for the cement.

You're going to build a freestanding wet wall 5 feet high, so you'll batter it 5 inches on each side, for a total of 10 inches at the base. Allow another 2 inches for cement. Then add the 11-inch width of the wall at the top. The total base width is 23 inches — you can make than an even 2 feet.

If you're building the wall in a freeze area where the frost line is at 36 inches, you'll have to batter it another 6 inches, 3 on each side. The foundation trench needs to be 30 inches wide by 36 inches deep. You'll make the foundation of the same material as the wall stones and cement.

Be sure to order enough material for this. You can figure the cubic yardage you'll need, or take the plans to your supplier and let him calculate the quantity. After all, it's his product, so he's the expert on the amount needed. He can also advise you on the size of the stones you should order. If you order 6-inch stones, for example, there will be some 4-inch and some 5-inch stones included, but the average size will be 6 inches. Figure 10-29 shows a cross section of a wet stack stone wall.

Stone Walls Illustrated

Figures 10-30 and 10-31 show how to build wet and dry stack retaining walls. Notice the differences between these and freestanding walls. The batter is straight on the side of the wall facing the dirt on the retaining walls. The retaining walls have a perforated drain pipe running their full

length. Note that the drain pipe location is different for wet and dry walls. On a wet wall, you need to relieve water pressure behind the solid mass of the wall. Install weep holes every few feet along its length by inserting lengths of 1-inch polyethylene or PVC pipe through the wall. You can space them at 2, 3 or 4 feet, depending on the amount of rainfall expected.

On the dry wall, you've got water seeping through from the front *and* the back. In both cases, the idea is to keep water from building up behind the wall and saturating the ground under it, undermining the base. The drain pipe should slope at least ⅛ inch for each 10 feet of length and empty into a dry well or other open area.

A freestanding veneer wall has a structural core of concrete block. It also has straight walls, no batter. It does have a foundation of poured concrete. The foundation has a step built into it, just below ground level. This step helps support the weight of the veneer stones. You use wall ties (small metal strips embedded in the block's mortar) to keep the veneer from falling forward off of the block. They're available at most block and brick suppliers. Buy ones that are long enough to extend through the block and embed into the rock veneer mortar. The cap stones give the wall a finished look and seal out water.

Figure 10-32 shows how to build a veneer-faced retaining wall. Notice that the weep holes are high on the wall. That's because rain water rarely penetrates more than the top few inches of the soil — perhaps 6 to 8 inches during a heavy rain. Drainage near the top of the wall keeps this water from backing up behind the wall. The bottom drain system will take care of any water that does seep down that far. The footing is included to distribute the wall's weight to the ground below it. This illustration shows 2-inch-thick veneer, but 4-inch veneer is also common.

Stone walls set in mortar have been used for hundreds of years and may still be a good choice for some applications. They give an appearance of solidity, beauty and distinction to a property (see Figure 10-33). There aren't too many wall and fence contractors who do this type of work, so this could be a profitable specialty for you. Do a quality job and charge accordingly.

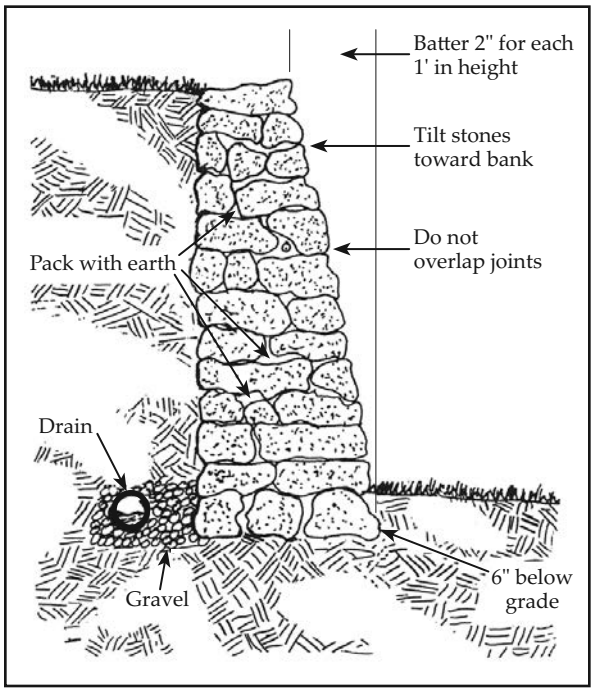

Figure 10-31
Dry stack stone retaining wall

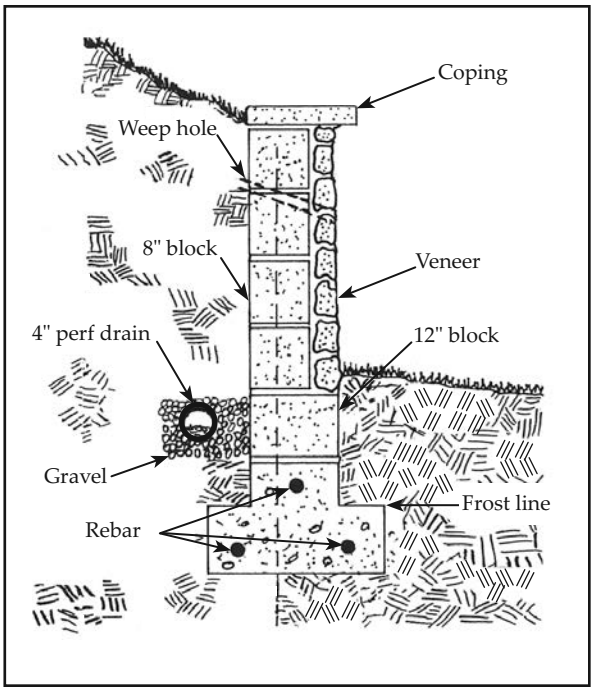

Figure 10-32
Veneer-faced retaining wall

Courtesy of Deborah Engel

Figure 10-33
A stone wall

Mass gravity walls are often built out of prefabricated concrete blocks 2½ feet wide, 2½ feet tall, and 5 feet long. This is manufactured in plain or architectural finishes. The blocks are built with "keys" to help hold them together (Figure 10-34) and they've been tested for use in retaining walls 27½ feet tall. To build a mass gravity wall as shown in Figure 10-35, you'd need a 35-foot forklift with a 6,000 pound capacity. This is something that you may leave for the "big guys."

In the next chapter, I'll tell you how to organize the business end of your fence contracting operation. Knowing how to build fences and walls is very important … so is running a profitable business.

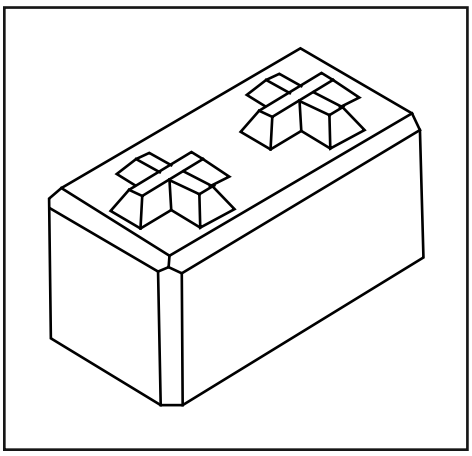

Courtesy of Ultrablock, Inc.

Figure 10-34
Mass gravity wall block

Courtesy of Ultrablock, Inc.

Figure 10-35
Mass gravity wall

This page left intentionally blank

Chapter 11

Get Your Business Started Right

IN THE PREVIOUS CHAPTERS, I've described how to build all types of fences and walls. But this business is about much more than building. If you're just getting started in fence contracting, let me offer some advice — no matter how good you are, knowledge and skill in the trade are never enough.

I've known some very good tradesmen who got in way over their heads as fence contractors. There's a big difference between being *good at wall or fence building* and being a *good wall or fence contractor*. That's the purpose of this chapter: to explain the part of fence contracting you've never experienced if you've never run a contracting business.

I'm going to start with the basics. Here's why. I've seen construction companies come and go. Plenty of them. And when I see a company fail, it's usually because someone wasn't paying attention to the most basic, most elementary parts of the business. Don't make that mistake. If you haven't run a successful contracting company before, I suggest you keep reading. The recommendations I make here may be some of most valuable advice you'll ever receive.

Before I get into the business of wall and fence contracting, let's explore some of the reasons why you might want to be a wall and fence contractor.

If you're dreaming of short hours and big paychecks, forget it. Running a business is demanding work. And sometimes there won't be enough money in the bank to pay tradesmen and suppliers, not to mention your own salary. That's especially true in the beginning. Do you want to be totally independent of others? Forget that, too. You have to depend on others — whether family, suppliers, employees, lenders or customers.

So why *are* you willing to risk your reputation, bank account and future? Here are the reasons some people give:

- I don't like my boss, and I can do better than he can.
- I want to be independent, and set my own hours.
- I want to keep what I earn, not give it to someone else.
- I can't get along with others. I'd rather work alone.
- I want to leave something for my family.
- I think I can do it. It's a challenge.
- I'm out of work and no one will hire me.
- I'm the best and I can prove it.

These are good reasons, and they might enter into your decision to start your own business. But be careful. Many of these reasons deal with feelings, not facts. Here are some of the things that inspire the *successful* business owner:

- I want a successful career most of all.
- I have the training.
- I have the money and the time.
- I know my friends and family are behind me.
- I know I can do better than the competition.
- I know I can earn a good, if not better, living than I do now.
- I enjoy being the boss.
- I know there's a real need for my services.

Now, that's more positive. Be honest. If you agree with all *those* statements, you're more than ready to go on.

Your Business Specialty

What kind of business are you going into? Yes, I know, it's wall and fence contracting. But that's a broad field. I gave you lots of options in Chapter 1. Now's the time to pick the specialty you prefer. I'll give you some tips on how to do this.

Begin by making a list of your strengths and the things that you most enjoy doing. In a column next to that list, put down your weak points and dislikes. Don't worry about the order — you'll assign priorities later. List at least ten reasons why you want to go into the fencing and retaining wall business. Put any obstacles to those reasons in the second column. Then list ten reasons why

95 out of 100 New Businesses Fail Within the 1st Year

That's a pretty scary number, isn't it? And, of the five remaining, only one will survive five years. Here are some reasons:

1. poor management and planning
2. not enough money to get the business going
3. the business was started for the wrong reasons
4. customers didn't need your services
5. costs were higher than expected
6. product or service was overpriced
7. not enough advertising
8. poor location
9. owner got sick and couldn't work
10. no systems or paperwork control
11. owner didn't know the business

There are probably a few dozen more reasons, but these are the most common. They all stem from the first item: poor management and planning.

the location where you live now is a good place for your business. Again, list any disadvantages in the second column.

List the parts of your education that will help you in business and, in the opposite column, put things you need to learn more about. Evaluate your talents, financial position and personal characteristics.

Now copy the lists over into three categories: business, personal and financial. Assign a priority value to each entry on both sides of the lists. One means "very important to me or the success of my business," down to 10 for those things you don't care about, or that won't make much difference. You can use the same number for more than one item on the list.

Copy each list again, this time with all the ones at the top, the twos next, and so on. You can refine the lists further if you want, but by now, you'll have a pretty good picture of your strengths and weaknesses, likes and dislikes. If you prefer working in rural areas, then specialize in the kinds of fencing farmers and ranchers use. If you like working alone, then concentrate on small jobs you can do yourself, not big projects that require lots of manpower. If design isn't your long suit, then stick to chain link fences or ordinary block walls. Don't go into bricklaying if you know nothing about laying brick, especially if you're a great carpenter.

And, if you can't solve or work around the obstacles or disadvantages that rank in the 1-to-3 range, then you'd better think twice about going out on your own at all.

If you're like many new business people, your weak points may be sales, accounting, and business management. Most people who open their own businesses are good at their trade but lack education and experience in management.

You don't need a graduate degree in business administration to run a small business, but you do need to know more than how to use a hammer or trowel. How much do you want to learn about being in business? Spend some time with this book, and you'll learn a lot. But can you put this information to good use? Only you can answer that question.

What Makes a Business Successful?

The owner has the ultimate responsibility for the success of any business. He has the most at stake and has to be willing to spend the time and effort to make it work. The owner has to be able to solve problems and be willing to take chances now and then. He may have to live for the business and learn how to do everything the business needs to have done for it to survive.

A business owner raises the business like a parent raises a child. And a new business is like a child. It has to grow, it gets hurt once in a while, it needs patience and discipline, it has growing pains … but, eventually, it may mature into something well worth the effort.

Your Business Structure

What kind of legal setup will your company have? Is your business going to be a sole proprietorship, partnership, limited partnership, closed corporation or open corporation? Let's discuss the differences between these and the advantages and disadvantages of each.

Sole Proprietorships

Sole proprietorships are the easiest and fastest to set up. You own everything, including all the risk. All you need to get started is a few dollars for a business license. In some states, you'll have to prove that you have a contractor's license. More on that later.

The advantages to sole proprietorships are that they're easy and don't cost much to set up. The major disadvantages are that you have to come up with all the money and, you're personally liable for all losses.

DBAs

Most proprietorships and partnerships also need a DBA. That stands for "doing business as." You need one if your business name is something other than your own name. For example, "Bill's Fences & Retaining Walls" would have to be a DBA. You register a DBA with your city or county government, and you have to publish a notice for several weeks in a newspaper that's authorized to publish legal notices.

Partnerships

Partnerships are almost as easy to start as sole proprietorships. Two or more people own the business and run it under a partnership agreement. You have

more talent and more startup money available. The main disadvantage of partnerships is potential conflicts between the partners. Also, partnerships are dissolved at the death of a partner.

> *"In many states, you'll have to file your* Articles of Partnership *when you apply for a business license."*

A written partnership agreement is a must. This agreement spells out in detail the responsibilities of each partner. It details who is liable for what and who earns what. It defines what happens in the event of an unsettled dispute. Get your lawyer involved right at the beginning. In many states, you'll have to file your *Articles of Partnership* when you apply for a business license. You also need a DBA. And, if your state requires it, at least one partner must have a valid contractor's license.

Limited Partnerships

Limited partnerships are less common in the United States than in Europe. Limited partnerships are the same as general partnerships, with one major exception: The partners are only liable for the amount they put into the company. In the event of a lawsuit or bankruptcy, the partners' personal property and bank accounts can't be attached by creditors. In sole proprietorships or partnerships, creditors can use your personal assets to satisfy a claim. Limited partnerships are more complicated to set up. You'll need a lawyer.

Proprietorships and partnerships don't pay any special income taxes. Income to proprietorships is reported on Schedule C of Form 1040. Partnerships file an information return only, disclosing income and how it's distributed among partners. Each partner then pays taxes on their appropriate share of the income.

Corporations

A *corporation* is treated just like a person under state law. Corporations have the right to enter contracts and sue and be sued. They have their own credit, bank accounts, assets, and liabilities. If more money or people are needed to run the company, more shareholders can be brought in, or more shares can be issued. Corporations pay taxes at special corporate rates.

The disadvantage of incorporating is the cost. Corporations are formed under state law. That can cost several hundred or even thousands of dollars. Corporations are separate taxpayers in their own right. So, if you choose this option, you'll have the extra cost of filing a set of company tax returns in addition to your individual return.

A major advantage of incorporating is the limited liability. Creditors have no claim against stockholder assets beyond the investment of each investor. Unfortunately, that makes it hard to borrow money in the early years. Banks and suppliers probably won't extend credit without the personal guarantee of several owners. If you guarantee a corporation loan, your personal assets are liable for payment on that loan.

Closely-Held Corporations

Closely-held corporations are usually owned by a few family members. They can sell or give stock only to a limited number of other people. That's a big advantage. Corporations continue even if shareholders die. Since company records are private in closely-held corporations, outsiders can't easily learn a corporation's secrets.

Publicly-Held Corporations

Publicly-held corporations are like closely-held corporations — with one major difference. The stock of most publicly-held corporations can be traded on the open market. Because the buying public has the right to be informed about the company, key records are open to public scrutiny.

The main advantage of a publicly-held corporation is that it can raise money through the sale of stock — if willing investors can be found. The disadvantage is cost. Qualifying for a public stock offering can cost several hundred thousand dollars in legal fees alone.

Figure 11-1 summarizes the advantages and disadvantages of the different types of business organizations.

Even under the best of circumstances, it's rare for a bank to loan money to a new business. Remember, 95 out of 100 fail the first year. So where does the money come from?

You Supply the Startup Money

Where do you get the money to start a new business?

- your own savings — you contribute property to the business
- you borrow against your life insurance
- you borrow from family and friends
- you continue to work while setting up your business
- you have a mate with a good job
- you mortgage your home
- you inherit money

ADVANTAGES	DISADVANTAGES
Sole Proprietorship	
➢ cheaper and easier to start ➢ owner has total control ➢ all profits go to owner	➢ owner liable for all damages ➢ profits taxed as personal income
General Partnership	
➢ legal and financial responsibilities shared ➢ combines talent of two or more people	➢ partners must agree on decisions ➢ history of failure due to personal conflicts ➢ profits taxed as personal income
Limited Partnership	
➢ investments made by several people ➢ liability of limited partners can't exceed their investment ➢ general business partner maintains control of business	➢ general partner has all responsibilities and liabilities but must share profits ➢ profits taxed as personal income
Corporation	
➢ investments come from many people ➢ disputes settled by voting shares ➢ shareholders are not liable for corporation debts	➢ loss of personal control ➢ shareholders may sell out ➢ most difficult and expensive type of business to set up

Figure 11-1
Typical business organizations

There are many places to get seed money. Some are better than others. I strongly suggest that you have more than enough money *before* you get started. Plan very carefully how much you'll need by making a list of anticipated expenses, and allow a little extra. If possible, get advice and help from a good, experienced businessman. Then leave some money in your bank account to meet normal household expenses.

Now we have you in some sort of fence and retaining wall contracting business, and you've got some startup money, so what's next?

Find a Customer or Three

Customers have to know that you're in business. If they don't, then you aren't. It's customers who keep the money flowing in.

Here's a thought to guide you in bringing in customers: Remember, you're someone else's customer. How do you want to be treated? What attracts you to a company's store or business? Why do you keep going back to them? Your answers to those questions will give you some clues about how to advertise effectively. It's half the secret of good advertising. The other half is technique.

Effective Advertising

What is advertising? Advertising is getting your message to other people — a message that's appealing and persuades them to use your product or service. Advertising in the digital age is like having a supercharged toolbox filled with endless possibilities and opportunities. Imagine being able to reach millions of potential customers with just a few clicks or taps – that's the power of digital advertising. Whether it's through social media platforms, search engines, or targeted display ads (Pay-Per-Click), the digital landscape offers a vibrant canvas for businesses to showcase their products and services. It's like having a virtual megaphone that allows you to shout your message loud and clear to the right audience, at the right time, and in the right place. But here's the best part – digital advertising isn't just about broadcasting your message into the void and hoping for the best. It's about creating meaningful connections, engaging with your audience in real time, and building relationships that last. With tools like analytics and data tracking, you can measure the effectiveness of your campaigns, tweak your strategies on the fly, and constantly refine your approach to ensure maximum impact.

By the way, when it comes to choosing a DBA name, it's essential to consider how it will impact your advertising efforts. Your DBA is more than just a name – it's your brand identity, your calling card, and your first impression on

> ***Make sure no one else*** in the area already has the same company name you want to use. I knew a contractor who had envelopes, stationery, ballpoint pens, pocket knives and tape measures printed with his company name and logo. What a great way to promote his business, right? Yes, until he learned there was another contractor already using that name!

potential clients. You want something memorable that reflects your expertise and resonates with your target audience. Consider your niche and the message you want to convey. Additionally, consider the versatility of your DBA for advertising purposes. Can it be easily incorporated into various marketing materials, such as flyers, business cards, or digital ads? A flexible DBA allows for cohesive branding across different advertising channels, enhancing recognition and recall among potential clients. Lastly, check if your chosen DBA is available and doesn't infringe on any existing trademarks. Trust me, you don't want any legal headaches down the road—like what happened to the fellow in the sidebar to the left. By carefully considering these factors, you can select a DBA that sets the stage for successful advertising campaigns and helps your business stand out in a competitive market.

Where Do You Advertise?

That's easy: where everyone else in your business advertises. After all, your competition isn't spending good money without getting results. You can effectively advertise in a variety of places to reach potential clients. Online platforms such as social media channels (like Facebook, Instagram, and LinkedIn) and Google Ads offer targeted advertising opportunities, allowing you to reach specific demographics and geographical areas. Additionally, listing services like Yelp, Thumbtack, and Houzz provide platforms for Contractors to showcase their services and collect reviews from satisfied customers. Offline advertising methods such as distributing flyers in local neighborhoods, advertising in community newspapers, and attending home and trade shows can also be fruitful avenues for you to connect with homeowners seeking your expertise. By utilizing a combination of online and offline advertising channels, you can maximize your visibility and attract a steady stream of clients.

Newspaper Advertising

While the effectiveness of newspaper advertising has declined with the rise of digital marketing channels, some contractors may still choose to advertise in newspapers, particularly in local publications. Newspaper ads can be beneficial for reaching older demographics or specific local audiences who may not be as active online. However, it's worth noting that many contractors now prioritize online advertising methods such as social media ads, search engine marketing, and local business directories, which offer more accurate targeting options and better measurement tools compared to traditional newspaper ads.

"Newspaper ads can be beneficial for reaching older demographics or specific local audiences who may not be as active online."

Weekly Freebies

Many communities have weekly shopper newspapers that have nothing but local ads. Circulation covers all homes in a relatively small area. These can be a good advertising buy. People usually read them cover to cover, looking for a bargain or some special item. Most carry ads by local contractors. Where there are two or more weeklies, contractors will often advertise in the same one. That's the one you want to use. Plan on running your ad in the same position every week. Potential customers will know where to find your ad and will look there when they need a bid on a fence.

Posters

I've run some very effective startup campaigns using posters tacked to utility poles. It's easy to put posters up all over town. People are creatures of habit. They use the same routes every day, and they see your ads over and over.

The problem with posters is that they can get you into trouble with local authorities and utility companies. The authorities may object because posters violate sign ordinances. Utilities don't like them because the staples or nails left in their poles are a hazard to workers. If you use posters, be careful where you put them.

You can have a printer produce 11 x 17 inch posters. Have them use clay-coated stock and waterproof rubber ink. Black ink is best. Don't use red — most red inks will fade after a few days outdoors. Make the lettering 2 to 3 inches high. Keep the design simple and clean. You want people to read your message quickly as they drive past.

Business Cards

You can't afford not to have these. They're inexpensive, so you can pass them out wherever you go. Many online platforms offer affordable or even free business card templates and design tools, such as Canva or Vistaprint's design services, allowing businesses to create customized cards without breaking the bank. Keep a

Bill's Fences & Retaining Walls

Bill Morgan, *Owner*
1234 Main Street
Anytown, CA 90000

Phone (203) 555-0100
Fax (203) 555-0101
Email BuilderBill@cox.net
Website www.BuilderBill.com

good supply of business cards on hand. It's your cheapest advertising. People keep business cards and refer to them when they're needed. Keep it simple: Don't clutter the card with so much information that what you're trying to sell gets lost in all the other words on the card. On the left is an example of an effective business card.

Radio and TV

I've rarely seen a specialty contractor achieve profitability through radio or TV advertisements. The cost isn't necessarily too high. The problem is that most radio and TV ads are *image* advertising. They help you project an *image* of being the biggest and the best. That's not much help to a specialty contractor. You need prospects — people calling asking for bids. Engraving your company's name in the minds of potential customers isn't your top priority. In the early stages of your business, *getting* customers is. Once you're established, radio ads might be the way to go, but not right away.

The Internet

The internet offers a cost-effective and powerful platform for promoting your company. When building your online presence, your domain name is of utmost importance.

Domain Name and Domain Registry

> ***URL*** stands for ***Uniform Resource Locator***, and is synonymous with the term "Web address."

A domain name is your unique web address registered with a domain registry, allowing customers to find your website on the internet. Registrations are typically renewed annually, with options for automatic renewal for multiple years. The registry safeguards your domain name, maintains ownership information, and manages DNS settings to direct browsers to your website. It's essential to secure a domain name that aligns with your business identity and use the .com extension whenever possible for credibility. Opt for purchasing your domain name directly from a registry company to ensure ownership, although discounted options are available with hosting packages from ISPs.

Your Company Website

Having a website is crucial for any new business to establish an online presence and attract potential clients. To start, consider your target audience, what services you offer, and the overall image you want to portray. There are various resources available to help design a website, ranging from free to paid options. Platforms like WordPress, Wix, and Squarespace offer user-friendly website builders with customizable templates suitable for contractors. While these platforms typically offer free plans, upgrading to a paid plan provides access to more features and customization options.

To make your website stand out, you should focus on creating a visually appealing design that reflects your brand identity. This includes using high-quality images of past projects, incorporating the company logo and color scheme, and ensuring a clean and modern layout. Emphasizing unique selling points and highlighting your expertise can also help differentiate your website from competitors.

"To make your website stand out, you should focus on creating a visually appealing design that reflects your brand identity."

Ease of navigation is essential for a successful website. This ensures that visitors can easily find the information they need, such as services offered, project galleries, testimonials, and contact details. Including a prominent call-to-action on each page encourages visitors to take the desired action, whether it's requesting a quote or scheduling a consultation. And don't overlook the importance of including testimonials and reviews from satisfied customers on your website – they're key to building trust and credibility.

In terms of costs, you can expect to pay anywhere from $0 to several hundred dollars or more for website design and hosting. Using a free website builder can keep initial costs low, but upgrading to a paid plan or hiring a professional web designer may be necessary for more advanced customization and functionality. Other potential costs include purchasing a domain name (typically around $10 to $20 per year) and ongoing expenses for hosting and maintenance. Overall, investing in a well-designed and user-friendly website is essential to establish credibility, attract clients, and grow your business.

SEO

Let's delve into the realm of SEO, or Search Engine Optimization. This specialized practice involves enhancing your website to achieve better rankings in search engine results pages (SERPs), making sure that your business is easily discoverable by individuals searching for your services. Start by conducting thorough keyword research to uncover the terms and phrases your potential clients are using to find your services. Incorporate these keywords strategically into your website content, meta tags, and headers to signal to search engines that your website is a relevant source of information.

But wait, there's more! SEO isn't just about keywords; it's also about enriching your audience's experience with valuable, informative content, and one effective way to do this is by launching a blog. Dedicate some time to crafting posts that showcase your expertise, share industry insights, and provide updates on upcoming products relevant to your work. Consider writing articles offering practical advice and tips, such as "How to Maintain Your

Fence." Not only will this help establish your authority in the field, but it will also attract organic traffic to your website and improve your search engine rankings.

Search Engines

Now, let's shift our focus to search engine advertising, and why this is such a game-changer for your business. Advertising on search engines like Google or Bing, including PPC (Pay-Per-Click) campaigns, puts your brand right where your potential customers are looking—literally at their fingertips! Imagine someone typing in exactly what you offer, and bam, there you are, ready to meet their needs. It's like magic, but better because it's real and it works! With search engine advertising, you can bid on keywords related to your business and have your ads displayed prominently in search results. When creating your ads, think about what makes your business unique. What sets you apart from the competition? Is it your top-notch customer service, unbeatable prices, or your cutting-edge products? Whatever it is, make sure it shines through in your ad copy. You want to grab people's attention and make them think, "Wow, I need to check these guys out!" Don't forget to include a clear call-to-action that prompts users to take the next step, whether it's requesting a quote, scheduling a consultation, or visiting your website.

Lastly, let's talk budget. Advertising on search engines can be super cost-effective, especially for new businesses. You have full control over how much you want to spend, and you only pay when someone actually clicks on your ad. Plus, you can track your results in real-time and adjust your strategy as needed.

In conclusion, by combining the forces of SEO and search engine advertising, your new business can establish a strong online presence, attract qualified leads, and ultimately, build a reputation as a trusted authority in your industry. Remember to stay vigilant, adapt to changes in the digital landscape, and continuously refine your strategies to ensure long-term success.

Links

In the realm of SEO, inbound and outbound links are paramount for boosting your digital presence. Inbound links, also known as backlinks, originate from external websites and signify trustworthiness and authority to search engines. Cultivating a diverse array of high-quality backlinks can significantly enhance your website's visibility and ranking in search results. On the flip side, outbound links, which connect to external sources from your site, bolster credibility and demonstrate thorough research in your content. Both types of links are indispensable for a thriving SEO strategy, driving increased traffic and leads to your business. However, it's imperative to remain vigilant about dead links – those that direct users to defunct websites. Given your ultimate aim of profitability, it's counterintuitive to include links that lead visitors away from your site. Select links thoughtfully and ensure they are regularly updated to maintain relevance and effectiveness.

Google Business Profile

Google Business Profile (GBP) is a free tool provided by Google, enabling businesses to establish and manage their online presence on Google Search and Maps. Setting up a Google Business Profile is straightforward: start by creating a Google account if you haven't already, then navigate to the GBP website and follow the prompts to add your business details. After verifying your business, complete your profile with photos, a description of your services, and any additional information that can help potential customers learn about your business. Encourage satisfied customers to leave reviews to boost credibility, and remember to keep your profile updated to keep customers engaged. The benefits of having a Google Business Profile extend beyond increased visibility; it also allows you to interact with customers and gain valuable insights about your audience through analytics. Additionally, consider utilizing Local Service Ads for more outreach, as they bring in leads directly from interested customers, with payment only upon customer contact. Leveraging both Google Business Profile and Local Service Ads can significantly enhance your online presence and help attract clients to your business.

Signs

When you get a job putting up a fence or wall for someone, be sure to post signs on the jobsite. Those signs will tell passersby and neighbors that you're doing the work. This is very effective. Where a new fence is needed or an old one needs repairs, there are likely to be others. Of course, you need your customer's permission to put up a sign. A few will object — they'll say that they're paying you to do a job for them, not advertise at their expense. But most people will let you do it.

The job signs you use should be portable, but large enough that they can be read from the street. Be sure your company phone number is on the sign. Put a note on the bottom of the sign that says, "Please phone … don't disturb our workers." Your customer won't appreciate crew members answering a neighbor's questions when they should be working.

Vehicle Signs

Make your truck a traveling billboard. A lot of contractors do. One option is a full vehicle wrap, where the entire surface of the vehicle is covered with branded graphics and messaging. Another option is a partial wrap, which covers specific areas of the vehicle while still allowing the base color to show through. Alternatively, you can opt for vinyl decals or magnetic signs that can be easily applied and removed. These options provide flexibility in terms of budget and commitment level, allowing you to effectively promote your business while on the go. However, keep it clean! There's no excuse for a dirty and disorganized company vehicle.

More Signs

Put your company name and logo on your work shirts and caps. People will take notice whether you're at the lumberyard, a building material store, the bank, or on the job. It's a subtle yet effective form of advertising that keeps your brand visible wherever you go.

Word of Mouth

This is the cheapest and the best advertising you can get. Do a good, professional job for people, and they'll recommend you to others. It's hard to find experienced professional contractors who are anxious to give quotations, will do good work, and finish on time for the price quoted. Be a contractor who does and the word will get around. Clean up when the job is done, be fair and pay attention to your customer's needs. Take the time to do a little extra. Settle disputes fast and to your customer's satisfaction. If you do all that, you've got the best advertising program ever developed. Additionally, don't forget to ask your satisfied customers to leave a review on Yelp or Google Business to help spread the word.

My last job brought in five referrals. That's five new customers I didn't have to spend hard-earned dollars to get. Ask your satisfied customers to refer you to others. Yes, ask them. People like to talk about their doctors, dentists, lawyers and contractors. If you did a good job and ask for referrals, you'll probably get them.

Advertising in General

Advertising can make or break your business's success. Try to get by without it; you'll probably be bidding for too few jobs. Be wise in your advertising strategies to ensure optimal results. Keep track of the effectiveness of your PPC ads using current tracking methods like Google Analytics. Monitor factors such as cost, the number of jobs generated, and customer response time. Maintain a detailed record of all your ads, including samples and outcomes, in a notebook. When things get slow — and they will — you'll have a record of which ads worked. Adapt the best ads for use again.

The money you spend setting up or running your business is tax deductible. That includes your business license, DBA, office supplies, phone calls, letters you've written, and all your advertising. Keep accurate records of these items. I'll show you how in the next chapter.

Advertising and Your License

If your state requires a contractor's license, be sure you know the rules. You may be required to display your license number in all your advertising. In some states, an unlicensed contractor may be subject to large fines if his advertisements state a price.

OK, now you're in business, have some startup money, and an advertising strategy. What's next?

The Necessary Evils

When a small business goes belly up, it's usually because the owner lost control. The owner doesn't know where the company is going, where it's been, or where it is now. The owner doesn't see problems developing. The company just stumbles along until a crisis puts an end to all operations.

"I've seen million-dollar companies go bankrupt because they didn't have good records."

Control requires a good paperwork system. I've seen million-dollar companies go bankrupt because they didn't have good records. Paperwork is a nuisance. Don't do any more than you have to. But you need some records to stay out of trouble. In the next chapter, I'll explain a recordkeeping system that will work for a small fence and retaining wall contractor. For now, I'll offer a few basic principles every contractor should follow to stay out of trouble. I'll start with taxes.

Taxes, Taxes, and More Taxes

As a small businessman you'll have a partner — the IRS. They're going to be looking over your shoulder every step of the way. They have the right to review your business records periodically to see what you've spent and what you've earned. And they're going to require regular deposits of withheld employee taxes and estimated company (or personal) income taxes.

Here is a list of various taxes you'll have to pay:

- federal income tax
- state income tax
- social security tax
- federal unemployment tax
- state unemployment tax

If that's not enough, you may also have to contend with these:

- personal property tax
- local income tax
- inventory tax
- transportation tax
- county or city tax
- federal excise tax
- state sales tax
- bond issue tax
- value-added tax
- use tax

There's more, but this gives you an idea. Of course, state and local tax rates depend on where you live and work. It's your responsibility to know about these taxes and pay them when due.

Here's a suggestion: Go online to see what IRS forms and publications you may want (http://www.irs.gov/formspubs/index.html). They're free. These will be useful to you:

#15	Circular E, Employer's Tax Guide
#15-A	Employer's Supplemental Tax Guide (PDF)
#17	Your Federal Income Tax
#334	Tax Guide for Small Business
#463	Travel, Entertainment, Gift and Car Expenses (Business Use of Car)
#505	Tax Withholding and Estimated Tax
#508	Miscellaneous Expenses
#513	Educational Expenses
#535	Business Expenses
#541	Partnerships
#552	Record Keeping for Individuals
#583	Starting a Business and Keeping Records
#587	Business Use of Your Home
#590	Individual Retirement Arrangements
#2106	Employee Business Expenses
#4136	Credit for Federal Tax Paid on Fuels
#4562	Depreciation and Amortization
#4591	Small Business Federal Tax Responsibilities (PDF)
#4797	Sales of Business Property
#8606	Nondeductible IRAs

You should also request a copy of these forms:

Schedule C	Profit or Loss from a Business
Schedule SE	Self-Employment Tax
Form 1040-ES	Estimated Tax for Individuals and on Self-Employment Income

And these are just the federal forms. Contact your state and local taxing agencies as well. Ask them to recommend which of their forms and publications apply to a new contracting business. Call your local city hall or county tax assessor's office for information on property and local taxes. Take the time to "get legal" right from the start. Know the bad news right away: It may save you a lot of time and trouble.

What *Are* Wages?

For tax purposes, wages are all pay for work done. That includes money, bonuses, commissions, vacations, and so on. For the employer, these items are tax deductible as a business expense. For the employee, they are taxable as income.

Insurance

Most people have some type of insurance. A life and health policy, renter's or homeowner's policy, and vehicle coverage are a good start, but when you're in business, that's not enough.

"Premium rates can vary by up to 100 percent or more."

I'll give you a brief description of the basic business coverage. You can probably combine most of them under a one-premium package. Shop around, and talk to several different agents. Premium rates can vary by up to 100 percent or more. An independent insurance agent is your best bet. He'll know how to shop for the best deals. Make sure the agent you pick understands your business and the risks.

Business Liability Insurance

This is usually called *public liability insurance*. It protects you if you're sued by someone claiming an injury you caused. What if you dig too close to a house foundation, causing the walls to collapse? Or suppose a worker leaves a shovel in your customer's yard and someone trips over it and breaks an arm? The insurance agrees to provide the legal defense to the claim and pay any damages awarded by a court.

This type of insurance usually carries a deductible. The more you're willing to pay as a deductible, the lower your premiums.

Loss of Income (Disability) Insurance

This coverage pays you a wage if you can't work because of a major health problem. You're covered if you break a leg, or suffer a serious illness like a heart attack. Remember, self-employed people don't qualify for unemployment benefits. That's another advantage to incorporating your business. As an officer of a corporation, you *do* pay into the unemployment fund and can collect benefits.

Casualty Insurance

This insurance reimburses you for loss to property. It will pay for repairs to your building in case of a catastrophe, and covers the replacement cost of stolen tools and equipment. These policies usually have a high deductible. Damage from earthquake and flood are usually excluded from the basic policy, but you can add them as riders at an extra cost.

Business Vehicle Insurance

You probably already have insurance on your car or truck. That's great. But look closely at your policy; most don't cover business use. There are two reasons for this:

1. Insurance covering personal use of a vehicle is based on the cost to replace the vehicle, the area the vehicle is driven in, and the driver's record. You usually put more miles on a vehicle you use in business. And you may drive it over a wider area.
2. But the biggest problem, from the insurance company's standpoint, is that the vehicle may be driven by several people — drivers the company knows nothing about. That's why a business vehicle will have a higher rate than a personal vehicle.

Umbrella Coverage

This policy covers claims that exceed the limits on any of your policies. Million-dollar awards are common in most states. This policy provides coverage to higher-than-normal limits.

Personal Life Insurance

You may already have a life insurance policy on yourself. But, as the value of your business grows, your life coverage should also grow. If you die, will there be enough money available to pay taxes and continue the business? Can your survivors afford to hire or train someone to take over the business?

"Term life is pure insurance without built-in extras or a savings account."

For affordable insurance, consider a term life policy. Term life is pure insurance without built-in extras or a savings account. It pays face value when you die. Term life is the least expensive life insurance you can buy. The cost depends on your age when you buy it — the younger you are, the less it costs.

Personal Health Insurance

Here's where you find out how expensive insurance is. Major medical coverage will cost several hundred dollars per month. If you're working for someone else now, and covered by group insurance, you may be given the option of continuing that coverage even though you're no longer a member of the insured group. That's an advantage, because it's hard to buy new coverage for a small company. Also, a new policy wouldn't cover any pre-existing condition.

Employee Health Insurance

Good health insurance can help you keep good employees. Offer to share the cost with your employees if you can't afford to pay the whole cost yourself.

You should also consider life insurance on key employees. Buy it for any employee whose death would severely jeopardize your business. Cover your business against the loss, and also make part of the benefits payable to the employee's survivors.

Workers' Compensation Insurance

This is mandatory if you hire employees. *Homeowners, beware.* If you hire someone to work for you, even the neighbor's kid, you're required to have workers' comp for them. Some states now require minimum coverage for casual employees to be included in homeowners' policies automatically. See your insurance agent for complete rules and requirements.

Social Security for Employees

Employers must match employee contributions to Social Security (FICA). The IRS' Circular E, Employer's Tax Guide, gives you the details about collecting and paying Social Security and withheld income tax. You use IRS Form 941 — Employers Quarterly Federal Tax Return, which you file … you guessed it … quarterly.

Social Security for You

Self-employed people pay FICA taxes when they file their personal income tax return. If your company is a corporation and pays wages, the employee's FICA tax is withheld from wages. The company also pays an equal amount in FICA tax.

Employer Identification Number

Once you hire employees, you have to file for a federal employer's identification number. Get IRS Form SS-4 (Application for Employer Identification Number) from the post office, the IRS or any Social Security office. You may also need a tax ID number from your state. Check with your state employment or income tax office.

Business Paperwork

Like it or not, paperwork is part of doing business. Your daily, weekly, monthly, quarterly, and yearly company and employee records are an important part of your business history.

Payroll records are only one type of record your company must keep. Together, your business records should show how sick or healthy your business is. They help you make the decisions that should keep your company profitable.

What forms should you keep? I'd keep estimates, bids and contracts for five years. Your accountant or bookkeeper needs to keep your ledgers and spreadsheets, financial statements, job logs, inventory and tax forms. Again, I'd keep these for at least five years. You're *required* to keep records that support IRS returns for at least four years from filing date or tax payment date, whichever is later.

Here's a quick review of the records you'll need for your fence and retaining wall contracting business.

Bid Forms

These are *non-binding* sales contracts. You use them when you quote a job for doing some work. In some states, a bid is binding when you submit it to a government agency. The reason most bids are non-binding is that they haven't been agreed to by both parties. You generally use them to start the negotiation that leads to a sales contract.

Make your bids as accurate as you can. Avoid *lowball* bids. Some contractors use them to get their foot in the door, hoping to raise the price later during negotiation or when the customer makes changes. That can only lead to bad feelings. Do good work and charge a fair price for that work.

A good source of bid forms (as well as many other forms for the contractor) is *Construction Forms for Contractors*. The forms are available printed and in digital format as RTF, XLS and PDF. You can order this manual on the order form at the back of this book.

Sales Contracts

This may be your most important job document. It details your agreement with your customer about what you're going to do and how much they're going to pay.

To be legally binding, a contract has to comply with state law. And every state requires notices and disclosures that vary with the size of the job, type of work (residential or commercial), materials used, who signs the agreement and even where the contract is signed. Omitting any of these notices and disclosures will make your contract unenforceable in most states.

Navigating state contract requirements can feel overwhelming. Although hiring an attorney is possible, it often comes with a hefty price tag. Instead, consider trying out *Construction Contract Writer*. With a free trial available at https://www.constructioncontractwriter.com, you can begin drafting contracts that align with your state's laws, ultimately saving you both time and money.

Ledgers and Journals

These are forms used to record all your business transactions. You list all income and expenses and, from those figures, you can find your problem areas, budgets, forecasts, and taxes. You fill out some of these daily. The daily records are consolidated into weekly sheets, the weeklies to monthlies, and so on. The balance sheet and profit and loss statement show company finances at a particular time.

Inventory Control Forms

Inventory falls into three categories: capital equipment, expendable items, and inventory for sale. Inventory is like money — and poor inventory control is money wasted. These control sheets help you keep track of what you own and how much it's worth. You'll need these forms when figuring value for property tax purposes and depreciation for income tax purposes.

Financial Statements

Some day you're going to want to borrow money at the bank. You'll march down to the bank and say, "I want to borrow some money." The banker will smile at you and say, "Sure, let's see your P&L." You've read this manual, and know that a P&L is a profit and loss statement, and you actually have one! So you can say, "Sure, here it is." That puts you ahead of the game and more likely to get your loan.

For more details on preparing P&Ls and other forms essential to your business, order a copy of *Construction Forms for Contractors*. There's an order form for it, and other construction manuals, at the back of this book.

Personnel Forms

Once you have people working for you, you'll need employment applications. Then you'll need IRS Form W-4 to certify withholding rates. You may use an employment contract, or a non-disclosure form to prevent an employee from telling others about your business. You'll need formats to discipline, review and inform employees. You'll have to keep track of wages and deductions, Social Security numbers, taxpayer ID numbers, mailing addresses and emergency contacts. You'll need records of hours worked, vacations, holidays, and compensatory time.

In recent years, there's been an increase in lawsuits brought by employees against their employers. Smart employers keep very accurate records of what their employees are doing, and what agreements they've made.

Job Logs

This is your job history. It shows what you sold, how much you sold it for, what your costs were, and how much profit you made. You'll use these to analyze growth and pricing and respond to slow periods and new competition.

Estimating Sheets

These worksheets will help you calculate material requirements, manhour requirements, and costs. Develop a reliable estimating system and update it regularly.

Stationery and Envelopes

These present the only image of your company that many will ever see, so have these professionally printed.

You'll need a logo or unique symbol that identifies your business. Visit your local print shop. They can probably suggest several logos that might be appropriate.

The Next Step

Let's recap all we've covered in this chapter. You've thought about why you want to start your own business. You've found a source for the money you need. You've applied for your business license and DBA, and decided what your legal setup will be. You've started advertising and lined up a few customers. You know where to get more information about taxes and insurance, and you have an inkling of what you'll need to run your office.

In the next chapter I'll show how to set up an accounting system and we'll discuss the forms I mentioned in this chapter.

Chapter 12

The Books You Keep

YOUR COMPANY IS NEARLY three years old now and business is great! You've got two fence crews busy most of the time and your bank account is growing. You've established trade credit with several suppliers and can get good discounts on most materials. You have two trucks and the equipment you need to handle almost any job that comes your way. You've set up a small office in a spare bedroom at home. Your ads are in two local newspapers every week. Things are going so well you're thinking of adding a third crew. It's a great feeling.

Then the wheels start to fall off:

1. You're in a dispute with a major supplier over some old credits. He claims you took return credits for materials that were never actually returned. You can't find the paperwork but remember sending back nearly a full load of posts.
2. Your accountant needs a current equipment list so he can develop a depreciation schedule. You can't find any paperwork that shows what you paid for the power auger.
3. The state made a "routine audit" of your second year's state tax return. No problem, except that you were paying some employees in cash during part of that year. The auditor found those payments. Now the state has sent a demand for the money due.
4. You're bidding two small jobs for the county and need bid and performance bonds for both. The bonding company won't issue the bonds until you bring in a current balance sheet and P&L for the year. These jobs are important to

you. They could open up a whole new (and profitable) market for your company. But without those financial records, you're sunk.

5. Your credit line at the bank is due for renewal. But the bank is getting nervous about the state tax deficiency. They won't even talk about the credit line until you bring in current financials.

I think you're in trouble.

These are the types of things that happen when you don't keep adequate business records. Unfortunately, problems like these are all too common. A good, profitable, growing business gets into serious trouble because the owner is better at building than he is at office procedures. Some specialty contractors can recover from problems like these. Others never do.

"You can be the contractor with enough business smarts to avoid problems like these."

But you don't have to fit the typical mold. You can be the contractor with enough business smarts to avoid problems like these. Keep business records that comply with state and federal tax laws. It's not hard. Then, when the IRS comes to audit you — and eventually they will — you'll be prepared.

The Chart of Accounts

The most basic document in every recordkeeping system is the chart of accounts. It's a list that shows assets, liabilities, sales and expense categories by name and reference number. Each account has an assigned number because computers love numbers. Your numbering system should group similar items together and leave gaps in the numbers so you can add sub-accounts for more detailed classification.

Figure 12-1 is the chart of accounts I use. It probably has more detail than you'll need. But too much detail is better than too little. Use my numbering system or get your bookkeeper or accountant to recommend a system that's better for your company. The important thing is to have convenient categories for each type of income and expense, asset and liability.

Notice how many expense categories I've created. One reason so many businesses fail in the first year is that they don't anticipate all their expenses.

The next step is to set up a filing system. If you've got the money, buy a four-drawer steel filing cabinet. A cardboard file box works almost as well and costs a lot less. But don't skimp on file folders, file hangers, and file markers. Get plenty.

10000	**ASSETS**
10100	Current assets
10110	Cash in bank
10120	Petty cash
10130	Accounts receivable
10200	Fixed assets
10210	Vehicles
10215	Depreciation reserve
10220	Construction equipment
10225	Depreciation reserve
10230	Office equipment
10235	Depreciation reserve
10300	Prepaid assets
10310	Prepaid insurance
10320	Prepaid rent
20000	**LIABILITIES**
20100	Current liabilities
20110	Accounts payable
20120	Sales tax payable
20130	Payroll tax payable
20200	Long term liabilities
20210	Loans payable
20220	Auto loan
20230	Truck loan
20240	Equipment loan
30000	**EQUITY**
30100	Owner's draw
30200	Retained earnings
30300	Profit (loss)
30400	Non-deductible expense
40000	**INCOME**
40100	Production income
40110	Sales of labor
40120	Sales of materials
40130	Travel costs billed to customers
40200	Consultant services sold
40300	Equipment rentals
40400	Interest received
40500	Income from company owned investments

50000	**COST OF SALES**
50100	Beginning inventory
50200	Purchases for resale
50210	Freight in
50220	Sales tax paid
50300	Direct labor
50400	Subcontract labor
50500	Materials and supplies
50600	Other direct costs
50610	Permits, fees
50620	Surveys
50900	Ending inventory
60000	**EXPENSES**
60100	Advertising
60110	Yellow pages
60120	Newspaper ads
60130	Signs
60140	Business cards
60150	Promotional gifts
60200	Bad debts
60300	Bank charges
60310	Checking account charges
60320	Visa, MasterCard fees
60400	Car and truck
60410	Gas and oil
60420	Tires
60430	Repairs
60440	Maintenance
60500	Commissions
60600	Depreciation expense
60700	Dues and publications
60800	Employee benefits
60810	Pension and profit sharing
60820	Medical, dental insurance
60830	Parties
60840	Bonuses
60900	Insurance
60910	Liability
60920	Property
60930	Blanket umbrella
60990	Paid deductibles

Figure 12-1
Chart of Accounts — *page 1 of 2*

61000	Interest
61010	Auto loan
61020	Truck loan
61030	Equipment loan
61100	Legal and professional services
61110	Accountant
61120	Lawyer
61130	Consultant
61220	Office expenses
61210	Office equipment under $100
61220	Stationery
61230	Computer supplies
61240	Printing
61290	Coffee and donuts
61300	Rent on business property
61400	Repairs on building and equipment
61500	Supplies
61510	Tools under $100
61520	Shop towels, paper products
61530	Maintenance equipment
61540	Safety equipment
61541	Fire extinguishers
61542	Medical kits
61600	Taxes
61610	FICA - Employer's share
61620	Unemployment tax
61630	Property tax
61700	Travel, meals, entertainment
61800	Utilities, telephone
61900	Wages (indirect labor)
61910	Vacation pay
61920	Sick leave
62000	Miscellaneous expenses
62010	Business license
62020	DBA recording
70000	**INCOME TAX PROVISION**

Figure 12-1 (continued)
Chart of Accounts — *page 2 of 2*

If you're short on cash, just buy some heavy 9½ x 12 envelopes. Label one for each account number on your chart of accounts. Put the following information on the upper left corner of each envelope:

Date file started __/__/__
Account number _____
Account name _____
Closing date __/__/__

Use these envelopes to store your receipts and notes on each account. File the envelopes by account number in a desk drawer, file cabinet, bookshelf or cardboard box. Of course, a file cabinet is best.

The Spreadsheet

Use spreadsheets to summarize your business transactions. Spreadsheet templates are available on the Internet, or you can do them manually (although I don't recommend this). You'll need three sets: the first set records each day's activity, the second set is a monthly summary, the third set is a consolidated report by year.

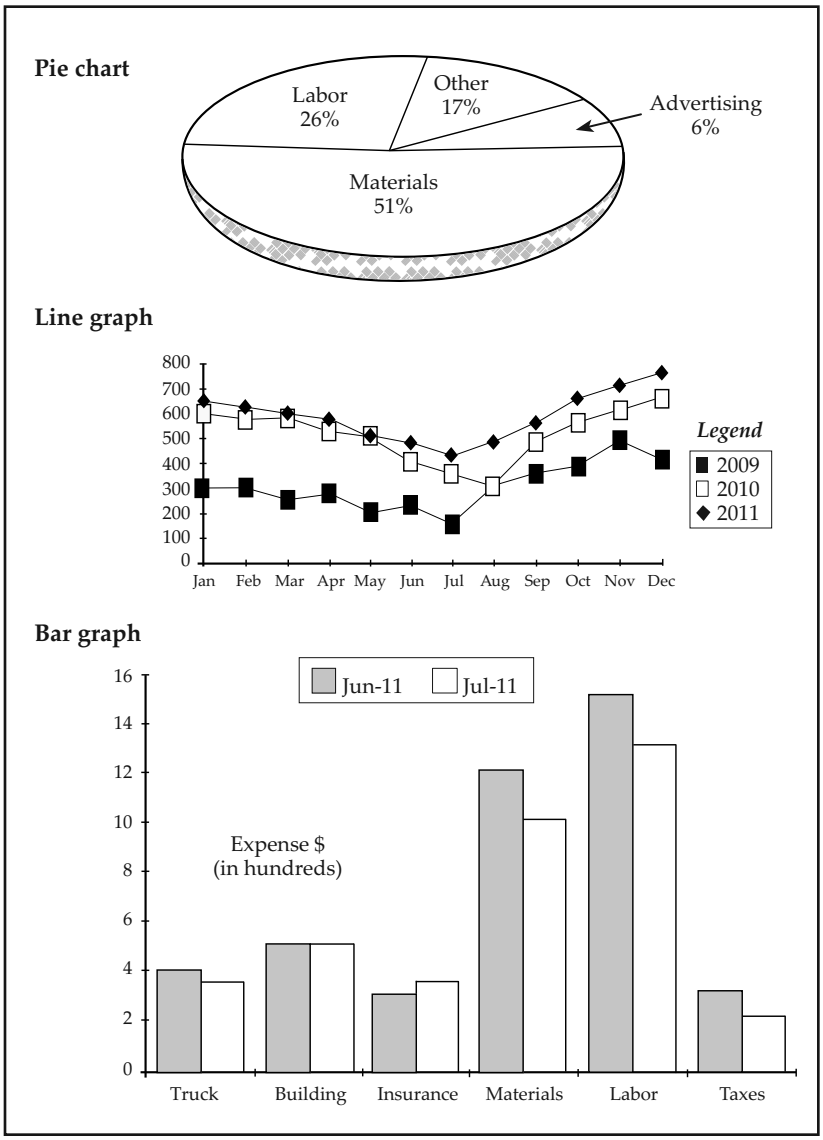

Figure 12-2
Use charts and graphs to show business trends

First, make a spreadsheet for each of your major account classifications. Page 1 is for income. That's what you get paid for fence and retaining wall work. Page 2 is for expenses, the costs of completing your jobs and running your office. List the account names and numbers across the top of the form. List the days of the month down the left column. Now put the total of each day's activity for each account in the box corresponding to the account and date. A check you receive from a customer on the 2nd of the month, for example, would go under *Gross Receipts*, in the row labeled "2." If you pay the rent on the 10th, put the amount of the check in the *Rent* column in row 10.

At the end of the month, total each column and enter that figure at the bottom of each column. If you're using a computer, the program will do this automatically.

Next, transfer totals at the foot of each column to the monthly spreadsheet, which is nearly the same as the daily sheet. I call it the *monthly consolidation*. The top line shows the same column headings as the daily sheets. List the months of the year in the left column instead of the days of the month.

At the end of the year, total the columns on the monthly consolidation and transfer the numbers to the annual spreadsheet. Label this the *yearly consolidation* and put the year in the left column. This gives you running totals for all income and expense accounts. You can use this record to analyze your performance, identify your strong and weak points, plan for the future, and make changes. You'll also have a tax record that will satisfy the IRS.

These sheets show exactly where every penny is spent. You'll know how much you earned. You'll have the information a lender needs when it's time to renew a credit line. You'll have answers for your accountant, banker, tax attorney and shareholders.

It's easier to see your company's business trends if you graph these numbers. Figure 12-2 shows a line graph, a bar graph, and a pie chart. The simplest

graph is the *line graph*. Just connect the dots to see what's happening. Each dot represents a number from your spreadsheet. If you're using a computer spreadsheet program, it can probably make the charts and graphs for you.

The line graph in Figure 12-2 compares advertising expense for the previous three years, but you could also use it to show a relationship between certain kinds of income and expense. For instance, you could show advertising for the year with one line, and income for the same period with another. Then you can see how sales relate to advertising expense.

Bar graphs are a good way to compare several items of income or expense against the same items during a previous period. Pie charts let you see at a glance what percentage of income or expense is represented by various categories.

Asset Records

Keeping track of expenses and income isn't enough. You also need to follow changes in company *assets*. Assets are the things your company owns: tools, materials in inventory, vehicles, cash in the bank, accounts receivable, and office equipment. There are several good reasons to keep a list of your assets:

1. If you decide to sell your company, your potential buyer will want to know what he's getting.
2. A lender will want a list of your assets as collateral for a loan.
3. When equipment is lost or destroyed, your insurance company will want to know what it's replacing.
4. Many states have property taxes on the value of equipment and office furnishings. You have to describe fixtures and equipment and list the cost on the assessor's form.
5. When your company buys a truck (or any expensive equipment or building), the purchase price isn't an expense in the year of purchase. Instead, tax law requires that you take a portion of the cost as expense each year over the expected life of the asset. This is called depreciation or "cost recovery." It's a complex subject best left to the person or firm that prepares your tax returns. But no matter who prepares your return, they'll need an accurate list of what you own, when you bought it, and how much it cost.

Figure 12-3 shows some of the assets on my current equipment schedule. Keep a list like this for all your company assets.

Tool Listing: Major items Costing Over $100				
Item number	**Description**	**S/N**	**Purchase date**	**Cost**
0010	Truck, 2008 Ford F250 Super Duty Crew Cab	1N237656378954	08/01/10	$16,875.00
0020	Chain saw, 18", Husqvarna	236-56444	10/29/11	385.00
0030	Earth auger, trailerable one-man, Central Hydraulics	568742	12/22/09	1,268.00
Tool Listing: Items Costing Less Than $100				
Item number	**Description**	**S/N**	**Purchase date**	**Cost**
1010	Post hole digger, Kobalt	83A40598	06/25/06	$28.50
1020	Circular saw, Skil	21/3654	07/12/09	89.95
1030	Claw hammer, 20 oz.		06/14/11	9.98
Office Equipment: Items Costing Over $100				
Item number	**Description**	**S/N**	**Purchase date**	**Cost**
2010	Computer, Dell desktop	12P57264	10/25/10	$1,850.75
2020	Desk/work station	824/0093	09/25/09	398.85
2030	File cabinet, 4 drawer, with lock	08N89P3	07/02/10	297.80
Office Equipment: Items Costing Under $100				
Item number	**Description**	**S/N**	**Purchase date**	**Cost**
3010	Calculator, desktop, with printer	999521	06/11/08	$99.95
3020	Chair	4DK6091	06/11/07	89.25
3030	Pencil sharpener, Bostitch		07/12/11	44.99

Figure 12-3
Typical asset list

Please notice the numbering system. The first number is the classification. The last three digits are the item number. You can put up to 999 items in each file — more than enough for most small businesses.

Notice also that I've got separate classifications for items over and under $100. Generally your accountant will want to expense in the current year anything that costs less than a certain amount. You have to depreciate more expensive items over several years. Let your accountant suggest what should be expensed and what has to be depreciated.

By the way, use an engraver to mark your company name on tools and equipment. Use a special code name or number so if your property is stolen and recovered, you'll be able to identify and claim it.

Inventory

I generally have some inventory of materials on hand. Eventually I'll either use it, sell it, or return it for credit. There are three types of inventory:

1. *Expendable inventory* includes items like computer paper, work gloves, nails, miscellaneous hardware, etc. You probably don't need to keep track of small value items like these. But watch out for "shrinkage." If you're buying far more computer paper than you're using, some paper is probably disappearing out the door before it's used.
2. *Usable* or *current* inventory is material you'll probably need in the next few weeks for a job. Say you have 1,000 board feet of redwood 2 x 4s. When you deliver this inventory to a job, subtract the amount delivered from your inventory record. When you reach a specified low point, it's time to reorder.
3. *Obsolete* inventory is material you've had on hand for a long time. Most unsold inventory that's over two years old is probably obsolete. Obsolete inventory ties up your cash. It's idle money not being used to make more money. Better to sell it at a loss than have it take up valuable space. Some money is better than no money at all. Also, keep in mind that the IRS will allow a tax deduction if you donate material or equipment to a charitable non-profit 501(c) (3) tax-exempt organization, so give it away if you have to.

Inventory in storage loses value every day. Would you take a $100 bill out of your pocket and leave it out in your yard? Let it get rained on, snowed on, dried out, weathered and rotted? Allow it to sit there for six months or more? That's what happens to a pile of redwood lumber. The odds are better if you put that $100 into the lottery than if you leave $100 in materials idle in storage.

"Obsolete inventory ties up your cash. It's idle money not being used to make more money."

It's called a *turn* when you move inventory into your yard and then out to your customer, collecting its cost and your profit as you do. Track your inventory to see how many turns it makes in a year. If your inventory value is $10,000 and inventory purchases totaled $100,000 for the year, you turned inventory ten times that year.

In the fence and retaining wall business, inventory should turn from four to twelve times a year. The best way to improve your inventory turn is to keep little or no inventory at all.

Current Inventory on Hand					
Item number	**Description**	**Qty**	**Purchase date**	**Cost**	**Unit of measure**
10010	Redwood, 1 x 3 x 6	550	1/12/11	$2.98	each
10020	Fir 2 x 4 x 8	25	1/12/11	2.53	each
10030	Pine 1 x 4 x 6	45	2/15/11	7.22	each
20010	Block, stretchers	120	3/24/11	1.95	each
30010	Concrete, 50 lb. sacks	10	4/01/11	4.98	bag

Figure 12-4
Current inventory on hand

You might say, "I don't care if that lumber sits there for a year, I'll use it eventually." That's probably true, but look at it this way: Let's say you invest $1,000 in some redwood 2 x 4s and they sit there for a year unsold. If you'd had that $1,000 in the bank during the year, it would at least have earned *some* interest. It might not be a lot, but it would be more than what you earned with your money sitting in your lumber pile.

Now, let's say you bought redwood 1 x 3s instead and sold them the first month and made a $55 profit on the sale. You reinvest the original $1,000 and do the same thing again. Each month you continue to sell out and make a profit of $55.

In the first case you made nothing from your investment. In the second case you made $55. But in the third case, you made $660. That's pretty good. Your inventory turn made the difference. This is called *ROI*, or *Return on Investment*. The ROI in the first case is zero, the second, 5.5 percent, and the third, 66 percent. Which do you prefer?

How do you end up with too much inventory?

- you don't want to spend hours each week at the lumber or masonry supply yard, so you buy in quantity
- you want to increase your margin, so you buy larger quantities to get a better discount
- you accumulate extras when you over-order for a job
- you buy materials in anticipation of jobs that are canceled
- you buy materials by mistake

It doesn't matter why you have inventory. What matters is keeping track of it. Keep inventory records like the ones shown in Figure 12-4.

Do the same thing for expendable and obsolete inventory. You could add an *extension* column showing the quantity times the price per unit. That way you can see the total investment. And you might want to add columns to show product type, size, grade, storage location, minimum order quantities, selling price, source and buying history.

I include the size and grade in the *description* column. If you have separate columns for these, you'll be at an advantage. Computers can sort and select very quickly with software programs like the ones I mentioned. I can tell the computer to sort and list all the 1 x 3s I have in stock, or all the tan block and have the list in seconds.

There's one other list you may find helpful. List things you've bought in the past but don't keep on hand regularly. The list will identify usage and cost for your non-stock items. If you start using more of an item, you might want to add it to your regular inventory. And the list is a reminder of where you got seldom-used items and where they were cheapest.

Vendor File

The companies you buy from are your *vendors*. Keep a list of all of them. Include the vendor's name, address, phone number, email, hours of operation, credit terms, and contact person. You may also want to add items like delivery policy, product quality, products handled, billing date, payment dates, and your purchase history. Keep this list on your computer, in a log book, or in a card file.

You'll probably find credit terms on your vendor's invoices. They look something like, "2 percent 10, net 30." This means you can deduct 2 percent from the invoice total if you pay it within ten days. The full amount is due within 30 days, after which time the vendor may add a service charge. Vendors offer the additional discount as an incentive for customers to pay their bills promptly. It worked with me.

Markup and Overhead

Markup is the factor you add to the cost of an item to cover your expenses and make a profit. Markup includes your *overhead*, and cost plus overhead plus profit equals selling price.

Your markup is the factor you multiply by your cost to find the selling price. Figure 12-5 is a table of markups from one to 99. As you can see, the *SPF (Selling Price Factor)* begins to jump rapidly once the markup percentage reaches about 70 percent. That's the point where the SPF times your cost gives a price that's probably more than your buyers are willing to pay.

Most retailers use an SPF of 1.66 to 2.5, wholesalers use an SPF of 1.11 to 1.47, while manufacturers generally use 2.5 to 3.33. For contractors, an SPF of from 1.98 to 3.33 is about right. That means you'd sell an item that cost you $100 for between $198 to $333 to cover your profit and overhead.

Overhead is office expense and all costs except direct job costs such as labor, materials, equipment, supervision, and permits. When you sell a wall or fence,

Markups									
Markup %	**SPF**	**Markup %**	**SPF**	**Markup %**	**SPF**	**Markup %**	**SPF**	**Markup %**	**SPF**
0	1.000	20	1.250	40	1.666	60	2.500	80	5.000
1	1.010	21	1.265	41	1.694	61	2.564	81	5.263
2	1.020	22	1.282	42	1.724	62	2.631	82	5.555
3	1.030	23	1.298	43	1.754	63	2.702	83	5.882
4	1.041	24	1.315	44	1.785	64	2.777	84	6.250
5	1.052	25	1.333	45	1.818	65	2.857	85	6.666
6	1.063	26	1.351	46	1.851	66	2.941	86	7.142
7	1.075	27	1.369	47	1.886	67	3.030	87	7.692
8	1.086	28	1.388	48	1.923	68	3.125	88	8.333
9	1.098	29	1.408	49	1.960	69	3.225	89	9.090
10	1.111	30	1.428	50	2.000	70	3.333	90	10.000
11	1.123	31	1.449	51	2.040	71	3.448	91	11.110
12	1.136	32	1.470	52	2.083	72	3.571	92	12.500
13	1.149	33	1.492	53	2.127	73	3.703	93	14.285
14	1.162	34	1.515	54	2.173	74	3.846	94	16.666
15	1.176	35	1.538	55	2.222	75	4.000	95	20.000
16	1.190	36	1.562	56	2.272	76	4.166	96	25.000
17	1.204	37	1.587	57	2.325	77	4.347	97	33.333
18	1.219	38	1.612	58	2.380	78	4.545	98	50.000
19	1.234	39	1.639	59	2.439	79	4.761	99	100.000

Figure 12-5
Markup table

you buy the materials to build it. You know how much those materials cost because you have a bill from the vendor. You also know how much profit you want to make on the job. But how much should you charge for overhead?

There are two kinds of overhead expenses: *fixed* and *variable*. Fixed expenses tend to stay the same, even when the amount of business you're doing goes up or down. Rent, mortgage, loan payments, your salary, and utility bills are examples of fixed expenses. Variable expenses change with your business volume. For example, if you have more work, you may have to hire some part-time or temporary employees or rent another truck. Sales commissions, some insurance, taxes, and the amount you spend on office supplies will vary with your sales volume.

If your fixed expenses are $2,500 the first month you're in business, you can expect to spend $30,000 the first year. If you work 40 hours a week for 52 weeks a year, that totals 2,080 hours. If you divide $30,000 by 2,080 hours, that means you'll have to make $14.42 per hour just to cover your fixed expenses.

Now, let's add another $30,000 per year for your pay. That makes the hourly rate $28.84. But you won't actually be producing fences and retaining walls the whole time you're working at your business. According to the

national average, 15 percent of labor hours are *loss time*. This is the time you're not working at paying jobs because of sickness, accidents, bad weather, equipment breakdowns, pulling permits, or any other reason. And I haven't even mentioned time spent correcting mistakes.

So now you have to meet fixed expenses and your salary with only 1,768 productive hours per year (2,080 hours less 15 percent.) So your hourly rate is $33.94. That means that for every eight-hour day you work, you have to charge $271.52, plus materials, *plus profit.*

Suppose you have a job that's going to take three working days. Material cost will be $1,000.

So, add your material cost of $1,000.00 to your labor and overhead of $814.56 (three times $271.52), and you come up with $1,814.56.

Now you have to add profit. Let's use 9 percent. After all, why should you be in business if you can't make a profit? Multiply $1,814.56 by 1.09 (your principal plus 9 percent) and you have $1,977.87. That's what you have to charge your customer.

You can convert this to a markup factor by dividing the selling price by your cost for materials:

$$1{,}977.87 \div 1{,}000 = 1.98$$

Now you can apply the markup factor to the material cost to find your selling price. If your next job requires $800 worth of materials, your selling price would be $1,584.

$$\$800 \times 1.98 = \$1{,}584$$

At this price, you should cover all your bills and expenses, earn a good wage for your time, and make a profit. And don't forget to include sales tax on your customer's bill, if you're required to collect it.

How Much Do You Want to Make?

I gave you a gross yearly salary of $30,000. After taxes you may keep about $21,000. I gave you a gross profit of 9 percent, but that may only be 2 percent net, depending on your tax bracket, other income, and deductions.

Remember, these figures were based on a 40-hour work week, less some time for non-productive activities. I didn't include the time it will take you to

do paperwork or the hundred and one other things you can't bill directly to your customers.

In most small businesses, the owner works 50 to 70 hours a week. If you work 60 hours, your hourly pay will be $9.62. (Sixty hours a week is 3,120 hours per year. $30,000 divided by 3,120 is $9.62.) You can earn more than that working for someone else, and not have the risk or headaches. So let's go back and set a more realistic salary for you, the business owner.

You've seen how to set up a chart of accounts for your business. Now, do one for yourself. List all your personal expenses for a year. Include mortgage, phone (landline and cell), utilities, food, internet, insurance, clothes, and miscellaneous costs. Give yourself a "profit," a bank account for future growth, vacations, kids' education, and retirement.

Begin by making a list of your personal expenses, based on your past spending history. Be sure to give yourself a reserve for income and Social Security taxes, about 32 percent of the total. If you want a new car or home, show the new payment amounts under future expenses. It all adds up, doesn't it?

Now I'm going to muddy up the picture. Most new businesses don't start producing a living for the owner for the first six to 18 months. That's a fact, and you'd better count on it. Do you have at least a six-month reserve in your bank account? You'll need that much, plus what it will cost to set up your business and keep it running for a few months. Maybe you can do it for less, but your chances aren't good.

I don't want to discourage you from starting your own company. I've started my own business from scratch and it's made me a good living. Maybe I was lucky. Most businesses that start with little or no capital don't survive very long. The odds are better if you hold off starting a business until you're ready. Hop in with your eyes closed and you'll lose a lot more than sleep.

Since you're still reading, I'll assume you're determined to start your own business. How did you come out with your salary projection? My guess is you probably want to make about $50,000 a year in your first year (before taxes). I'll also guess that you'll want to be earning about 18 percent profit on your business before taxes. When you go back and plugged in these figures, you'll probably come up with a markup of about 2.3 times material cost. My experience tells me you're still too low. I suggest a minimum markup of 2.5. On small jobs, under $800, use a 3.3 markup. If you manufacture prefab fencing, use 2.7. The material cost is higher and the labor cost is lower.

The markup figures I've given you work out to between $35 and $45 per hour. I suggest you bill a minimum of four hours on any job. Even on a little repair job, it takes you that long to make the sale, get the materials, drive to the jobsite, do the work, drive back, unload your truck, and do the billing and other paperwork.

When you're starting out, it's tempting to put off the paperwork and get on with the "more important" things. *Don't do it!* Your business records are essential to your success.

Budgeting Business Expenses

Let's say you've set up your chart of accounts and have access to some spreadsheet forms. Let's see how these can help you. If you have a computer and suitable software, then you can use them to play *"what if"* number games. What if I increase my earnings by 10 percent? What if I cut my advertising by 2 percent? In a blink of the eye you can see the results of any changes you plan to make.

If you don't have a computer at the present time, get one as soon as you can. But in the meantime, I'll show you how to do some *ratio analysis*. We use ratios to find out how one thing relates to another. How does income relate to expenses? How does advertising relate to the number of jobs sold? Even if you have a computer, it's good to know how to figure ratios.

If you can, compare your ratios with other fence and retaining wall contractors. You can sometimes get this information from customers who hired a competitor instead of you. Also, in any publicly-bid project — city, county, state or federal — the bids must be made public. See how your company stacks up. You'll probably see very quickly where your company is weak and needs improvement.

Your banker uses balance sheets and expense ratios to figure how much credit he can extend. The IRS uses ratios to select companies for audit. Ratios are a powerful tool when used correctly. Let me show you how to put them to work in your business.

"If you have a computer and suitable software, then you can use them to play 'what if' number games."

Any whole item contains *100 percent*, and you can express any part of that whole as a *percentage* of that item. You can find out what percentage of an item is represented by any part of that item. And you can find out what percentage of one whole item is represented by another whole item. This lets you build some comparisons, or *ratios*, to show you how your business is doing.

You can use your total income or expense figures and find out what percentage of those totals each expense category represents. Let's play with some numbers. Here are some figures from my business the way it was a few years ago: income, $100,000; material expenses, $30,000; advertising expense, $2,000.

In the following examples, the slash means "is to" and the equal sign means "as."

The first equation would read:

2,000 *is to* 100,000 *as* 2 *is to* 100

The ratio of material expenses to income is 30,000:100,000. You can eliminate the same number of zeros from each and get a ratio of 3:10. Now you can figure a percentage by dividing 3 by 10 and multiplying by 100 to get 30 percent. Material expense is 30 percent of income.

Use the same procedure to find out what percentage of either income or expenses this company spent on advertising:

$$2{,}000/30{,}000 = 2/30$$
$$2 \div 30 = 0.066 \times 100 = 6.7 \text{ percent}$$

So, advertising is 2 percent of total income.

$$2{,}000/100{,}000 = 2/100$$
$$2 \div 100 = 0.02 \times 100 = 2 \text{ percent}$$

Advertising is 6.7 percent of material expenses.

You can do this for every item on your chart of accounts. If you do it correctly, the total of all the individual items will be 100 percent. Figure 12-6 is an example of expenses compared to total income for a small fence contracting business.

Now, let's use these percentages to make a *budget*. In Figure 12-7, let's multiply each percentage by $100,000. That tells you how much of your total income you expect to spend for each expense item.

Expense item	Percent of total income
Rent	9.0
Phones	.5
Utilities	4.5
Postage	.5
Vehicle	7.0
Office	2.0
Insurance	1.0
Salary	33.0
Materials	22.0
Other	.5
Taxes	12.0
Advertising	8.0
Total	**100.0 %**

Figure 12-6
Typical expense percentages

Expense item	Budgeted amount
Rent	9,000
Phones	500
Utilities	4,500
Postage	500
Vehicle	7,000
Office	2,000
Insurance	1,000
Salary	33,000
Materials	22,000
Other	500
Taxes	12,000
Advertising	8,000
Total	**$100,000**

Figure 12-7
Sample expenses

As you see, the total is $100,000. But as you look this preliminary budget over, you'll see it's not realistic. You need to make some adjustments:

1. Office expense seems too high, and insurance too low. Reverse them.
2. The phone item seems too high, since the business only makes local calls. But it includes charges of $25 per month for the Yellow Pages ad. That's $300 a year, or 0.3 percent of total income. Move those charges to advertising, but don't change the amount of the advertising budget.

3. *Where's your profit?* Profit is the difference between income and expenses. You want your profit (after you pay yourself) to be at least 9 percent. So you have to add an item to the list of ways to split up income. But where will the money come from? Unfortunately, in a case like this, the first place it comes from is the owner's draw. Reduce your salary from $33,000 to $30,000.
4. Your materials estimate is too low. In order to gross $100,000 with an SPF of 2.7, you'll have to turn $37,000 in materials ($37,000 × 2.7 = $99,900). You still have some adjusting to do.
5. Give up the office and work from home for a while. That will cut your rent and utilities costs. Cut down vehicle expense — it's a little out of line — and pare some from advertising, insurance, and profit.

Expense item	Annual budgeted amount	Monthly budgeted amount
Rent	1,000	83.33
Phones	200	16.67
Utilities	500	41.67
Postage	500	41.67
Vehicle	4,000	333.33
Office	1,000	83.33
Insurance	1,500	125.00
Salary	30,000	2,500.00
Materials	37,000	3,083.33
Other	500	41.67
Taxes	9,000	750.00
Advertising	6,800	566.67
Profit	8,000	666.67
Total	**$100,000**	**$8,333.34**

Figure 12-8
Budget

Your revised budget looks like Figure 12-8. This sample budget is in line and everything balances. Remember, your figures might be far different from these. Just make sure that they're realistic. Also, some items, like rent, can't be changed easily.

You can break this down further by dividing again by 21 (there are 21 working days in an average month), to see what your daily billings have to be to reach the projected income level.

Compare Expenses to Your Budget

Now, when you fill out your monthly spreadsheets, you can test the totals against your budget percentages. Use the monthly income and expense figures. If you find an item that's out of line, do something about it. Let's say that in January your phone expense is way over budget. Maybe your budget is too low and you have to take some money from another category. Or is someone using your phone for personal business? Has the phone company made a mistake? In either case, you should do something about it.

Compare your actual expenses to your budgets regularly. Just a 1 percent overrun on several of your larger expenses could cost you $1,000 a year. Even if you have someone else doing your books, *you need to pay close attention to them yourself*. It's your business and your responsibility. Your bookkeeper or accountant may be very good at bookkeeping or accounting. But they probably don't understand fence and retaining wall contracting. Only *you* can identify the problems, see the opportunities, do more of what's working and fix what's broken.

Don't Forget the Tax Man

Here's one way to get in the hole quickly. Employers have to file IRS Form 941 quarterly. We discussed that already. But if you're self-employed and have no employees, you still have to file an estimated tax return and pay the amount due each January, April, July and October. Be sure to put money aside from every job for this.

You can postpone *almost* any bill without creating a major problem. Creditors may give you a hard time, but they'll usually wait a month or so before they turn you over to a collection agency. Collection agencies will hassle you for a few months before they turn you over to a lawyer. The courts will delay payment a few months more. Eventually they'll issue a judgment or give you a payment schedule and plan. As a last resort, you can declare bankruptcy. Then you may keep your business and agree to a schedule of payments, or lose your business but keep most of your personal possessions. The important thing to know is that all this takes time, maybe months or years.

But there's one creditor who operates a little differently. That's the IRS. They're really ruthless. When they send you a bill, you have 30 days to pay. *Period.* If they think you're not going to pay them, they'll just come and get it. They'll attach bank accounts, personal property, business assets, vehicles, accounts receivable, everything. Don't mess with the IRS. Borrow the money if you have to, but pay them.

A little more about the IRS. They'll most likely audit you eventually. New businesses in their second full year seem to get audited regularly. Maybe the IRS knows from experience that this is a key period in the life of many companies.

"But there's one creditor who operates a little differently. That's the IRS. They're really ruthless. When they send you a bill, you have 30 days to pay. Period."

If you keep your paperwork in order, you shouldn't have any problems. You'll be able to produce an explanation for why you spent $105 on peanut brittle or whatever. Without your paperwork, they'll *estimate* your income and expenses for you — and tax you accordingly. That could get expensive, as the IRS often seems to see things differently from the way you or I do. Not only will you have to pay what they think you owe them, but also penalties. Penalties generally start at 10 percent of what you owe and climb at a rate of 1.5 percent per month for each month your payment is late. And then there's interest, also. (I know … you're not interested.)

You could be audited in the first year, or even several years in a row. That happens because the IRS computers are set up to flag anything that's out of the ordinary. In the example above, let's say the advertising budget was 18 percent rather than 8 percent. Eight percent is considered normal for most businesses; 18 percent is not. If you claim a deduction of 18 percent for advertising, you'll be flagged for audit. The IRS flags personal tax returns the same way.

More Paperwork Controls

We've covered income and expenses, inventory and equipment logs. But there are several other things you need to keep track of. Keep a quote log and a job history file. Record your vehicle mileage and maintenance costs. You need to know how much money you owe, and who owes you. You need to schedule your time. If you have employees, you need a record of their pay rates, the hours they worked, and how much you owe and have withheld in payroll taxes. You can set all these logs up manually now, and convert them to computer later if you don't have a computer now.

Keep Track of Bids

A *quote log* is a list of sales calls and quotes offered. Record the customer's name, assign a customer number, and show the customer's address, the date of the estimate or quote, the type of work or job quoted on, and the amount you quoted. Leave space to show any follow-up information — including whether or not you made the sale.

If you want a paper backup, or you don't have a computer right now, keep the customer's name, address, and phone on 3 x 5 cards in a customer file. Number each card, and put the number on your log sheet to make cross referencing easy.

On your quote log, include travel time and mileage, the time it took to prepare the bid, the cost of gifts or premiums you gave the customer, and any other costs incidental to the quote.

The Job Log

A job log is the same as a quote log, but with more detail. Add columns for labor, materials, permits, deliveries, sales taxes, and travel. The job log is a detailed journal of each job where you record all costs, and what the customer paid. You refer back to this information when you want to update your estimating resources.

Back up the job log with numbered copies of your customer invoices. Now you have a complete record of what you did on every job. Have your customers sign your copy of the invoice to show that the work was completed to their satisfaction. Include a picture if a job was especially outstanding or required unusual or difficult construction techniques.

How Good is Your Sales Ratio?

The information for these logs comes from your quote or estimate and your sales contract. You can use the logs to see how well you're doing in your sales efforts. For example, suppose you spent 22 hours quoting ten jobs last month. You sold six of the jobs for a total of $15,000. You can use ratios again to get valuable information.

You sold six of ten jobs, or 60 percent. That's very good. My average is 35 percent. There are 173.33 working hours available during an average month, and you spent 22 of them selling. That's more than 12 percent of your productive time:

$$(22 \div 173.33 = 0.1269 \times 100 = 12.69)$$

Estimates don't come cheap. Let's figure out how much the estimates on last month's jobs cost the company. The six jobs averaged $2,500 ($15,000 ÷ 6). If your hourly billing rate is $45 and you spent 22 hours selling, you can figure exactly how much it cost you to make each sale:

$$\$45 \times 22 = \$990 \div 6 = \$165 \text{ per sale}$$

You can also divide your selling cost per sale by the income from the sale to see what percentage of your sales income you spend to sell the jobs:

$$\$165 \div \$2{,}500 = 0.066 \times 100 = 6.6 \text{ percent of income}$$

Now you can track your performance month by month. If your gross income per job starts to drop, you can either raise prices or be more selective in your bids. If the time you spend selling goes up, or your conversion rate drops, it may indicate a tighter market or a new competitor. You may have to sharpen your selling skills. If leads drop off and you're quoting fewer jobs, you may have to increase advertising expense.

You can use the totals from your job log to give you even more information. First, here are some accounting terms you should know:

- *gross income* (or *gross revenue*): the total of all sales
- *gross profit:* the sale amount less costs of materials, jobsite labor, equipment rental, and supervision
- *net operating profit:* the gross profit less expenses and overhead
- *net profit:* net operating profit, less taxes

In the above example, materials, labor, expenses and overhead cost a total of $12,000, which averages $2,000 for each of the six jobs. The net operating profit for each of the jobs is $500 ($2,500 − $2,000). That's not bad. Using ratio analysis again, that's 20 percent:

$$\$500 \div \$2{,}500 = 0.2 \times 100 = 20 \text{ percent}$$

If you're in a 30 percent income tax bracket, your income tax on each job would be $150:

$$\$500 \times 0.30 = \$150$$

The net profit (after all costs and taxes) is $500 − $150 = $350. The after-tax profit ratio is:

$$\$350 \div \$2{,}500 = 0.14 \times 100 = 14 \text{ percent}$$

If your profit drops a point or two the following month, you can figure you're either quoting too low, or the cost of materials, labor, or both, went up. You need to make some adjustments.

After the adjustments, the next month's figures show a rise in income per sale, but the conversion ratio dropped to 30 percent. (Remember that it was 60 percent two months earlier.) That might mean you over-adjusted and are pricing yourself out of the market, so you have to lower prices again.

You'll have to make these kinds of adjustments for several months when you start a new business. Eventually, the ratios will stabilize at a comfortable level. I suggest you try to convert 30 to 40 percent of your quotes into sales and make 18 to 22 percent profit before taxes.

Your conversion rate shouldn't drop below 25 percent — one sale for every four quotes. Your profit before taxes should be at least 14 percent. Anything below this indicates a major problem somewhere.

Watch Your Equipment

Keep a *vehicle log* — a history of vehicle use, performance, and service. Write down the beginning and ending mileage for each trip you take. When you fill the tank, put down the number of gallons and the cost. Make a note of what each trip was for. If you use the vehicle for both business and personal travel,

you *must* keep these records to satisfy the IRS. They won't let you deduct your vehicle as a business expense if you can't break down the usage.

Keep track of miles per gallon also. That can be an early indicator that you need a tune-up, your tires are low, or that a major problem is developing. Flag the vehicle log at certain mileage intervals for preventive maintenance. Have the oil and filter changed every 3,000 miles or whatever the manufacturer recommends. Get a lube job and safety check when recommended. See if you need tires after every 30,000 miles. Check your owner's manual for specific requirements.

Why is this important? Suppose your gas mileage drops from 18 mpg one month to 12 mpg the next, but you're not keeping a log, so you don't notice. You drive 2,500 miles per month, and don't discover the drop in mpg for four months.

10,000 miles at 12 mpg = 833.33 gallons
10,000 miles at 18 mpg = 555.55 gallons

If gas is running about three dollars a gallon, you've wasted $833.34 in just four months. That's a pretty high price to pay for running on low tires or not getting a tune-up when needed.

The Office In Your Home

Many contractors use part of their home for an office. This is a tax deductible expense, providing you keep accurate records. First, determine the total square footage of your home. Then find the square footage of the office area. Figure what percent of your home the office occupies.

Suppose your home is 2,000 square feet, and your office is 8 x 10 (80 square feet):

$$80 \div 2{,}000 = 0.04 \times 100 = 4 \text{ percent}$$

So, you can deduct 4 percent of your utilities and rent or mortgage as a business expense if you meet IRS requirements. Follow your tax advisor's recommendation. No doubt, he'll tell you to keep very accurate records. The IRS is very picky about home-office deductions.

If you do keep your office in your home, consider renting a post office box or a box in a commercial mailbox center for your business mail. This is a deductible business expense, and has an added advantage of keeping customers and salesmen from dropping in on you at odd hours of the day and night.

Your Business Phone

You can use your home phone for business and deduct those charges also. But you *must* keep an accurate log of both your personal and business calls. The IRS won't allow the deduction if you don't. I recommend you have a separate line installed for your business. It keeps the records straight. You can also put an answering machine on the business line and keep your personal line free. Use the business phone in your ads. Who wants 40 calls a day on their private line?

Congratulations! If you're doing what I suggest in this chapter, you've passed *Accounting 101 for Fence & Retaining Wall Contractors*. The next chapter covers contractor's law and much more information on improving sales.

Chapter 13

Sales & Contractor's Law

THIS CHAPTER SHOULD BE essential reading for every specialty contractor. I'm going to explain how to build a good business while staying out of trouble with state, federal and local government agencies. You've spent a considerable amount of money setting up your business, buying equipment and tools, and advertising. But none of that does you much good if you can't sell your services to a customer.

Advertising can raise potential customers' interest in your product or service — but advertising doesn't sell. Your competition advertises the same services and products. What makes the customer buy from you instead of the competitor? The answer is *salesmanship*.

Why Do You Shop Where You Do?

People have been trying to figure out the answer to this question for many years … especially since the dawn of the advertising age. Sometimes it's convenience — the store is right across the street! Sometimes it's price — the sale was just too good to pass up. But usually it's a number of factors.

- Do you buy from a particular store because it's the only one with the product or service you want? I doubt it. Competition is intense in nearly every business.
- Does the place you buy from always have the lowest prices in town? Probably not. Prices change from place to place every day. Someone's always having a sale.
- Is it the store hours? Not really. Most stores, banks and companies that serve the public are open long hours.

- Is it because they have a big ad in the phone book? Of course not. There are plenty of big ads in the phone book.
- Is it because they treat you with courtesy and give you good value for your dollar? Almost certainly.

There's no single reason why people buy from certain merchants. But everyone likes to buy where he feels welcome. That's how your customers have to feel when they come to you. Listen to their problems and be concerned. Ask them questions and be sincere. Help them the way you'd like to be helped. Too many salespeople today forget who really pays their salary. It's not their boss or the company; it's the customers.

Most of us aren't born knowing how to sell. We have to learn. Anyone willing to invest some time and effort can master the basics of selling. Let me tell you some tricks of the trade.

Sell Yourself

Although *we* know better, many people think most contractors are cheats. Some may be. But the larger percentage aren't. Most contractors are hard-working people with valuable skills. But public perception of construction contractors puts you at a disadvantage when you're talking with prospective customers. You have to sell not only your product or your service, but yourself.

A new prospect will evaluate your appearance first. Wear dirty, worn-out clothes and a three-day growth of beard and you've just about killed the sale. You don't have to dress like a banker in a three-piece suit. But you *do* have to look presentable. Dress casually in slacks and a sport shirt. You want to make your customer feel comfortable.

The Presentation Booklet

One effective way to spark your customer's trust and confidence is to make up a presentation booklet. Design an informative and attractive handout that tells about you and your company. Don't go overboard; a few pages will do. Here's what to put in your booklet.

1. a copy of your business license
2. a copy of your contractor's license
3. an outline of the major features of your standard contract and warranty
4. a list of your credit terms
5. copies of references from past customers

6. membership certificates from the Chamber of Commerce or Better Business Bureau
7. a picture of your building or vehicle

In my opinion, you shouldn't include pictures of past jobs. *You* might like a fence you built, but your customer might not. An attractive presentation booklet will put you a step ahead of your competition. *They* probably won't offer one.

Be Prepared

Have a good supply of blank contracts, estimate forms, pencils, pens, and paper with you when making sales calls. Carry a heavy-duty tape measure and a calculator. If you have to borrow supplies from your customer, you'll probably lose the sale. After all, if you can't prepare for a simple sales call, can you be trusted to build a decent fence or wall?

Notice I didn't say to bring a ton of samples with you. I have mixed feelings about bringing samples to a customer. Most customers have either seen your samples or already know what they want. You'll just make them nervous if you confuse them with too many choices.

On the other hand, a *few* choices can help clinch a sale. A prospect might find 3-inch-wide cedar more attractive than 2-inch-wide redwood. It's up to you to judge whether to carry samples to the sales meeting. Here's my suggestion: Bring all the samples you can, but leave them in your truck. If your customer is undecided during the sales pitch, then bring in a few samples. By that time, you'll have a pretty good idea of what he wants.

Sell Security and Confidence

One reason customers call you is that they're afraid to do the job themselves. They don't know the construction techniques, problems, or laws that apply to building a fence or wall. You have to show them that you're the expert; that you're confident about what you can do and that you know your trade. That's the key to making sales … trust.

For example, make suggestions that show your experience and professionalism: "Mr. Jones, I know you'll want to get several bids on this job. When the bids are in, be sure you're comparing apples to apples. My quote includes both the building permit and the survey."

Win Trust to Win the Job

Don't talk price with customers until they're sold on you, your services, and your product. Customers want to feel confident in the company they hire for a job. If you inspire confidence you'll probably get the job, even if your price isn't the lowest.

Know Your Business

The most important thing is to know your services and products thoroughly. That sounds so basic that you wonder how everyone doesn't know it. But how often have you met salespeople who couldn't explain how their product works, or what it's made of, or how to take care of it? Think about it.

Do this: Sit down with a friend. Have him ask you questions a customer would ask if he was about to accept your bid to build a fence. If you can't answer every legitimate question, then you don't know your business. Make a list of any questions you couldn't answer and develop good answers. Then do it again. When you can answer all the questions that may come your way, you're ready to make the sale.

Look, Listen, and Ask Questions

Learn to listen. You won't make the sale until you've answered every question the prospect has and overcome every objection. To find out what's holding up the sale, you have to listen. Listen with both your ears *and your eyes*. The ears hear words — the eyes hear body language.

Body Language

There are many body positions that *might* indicate how a potential customer is feeling. I say this because sometimes body language can be deceptive, or just the opposite of what you're interpreting.

A person sitting there with crossed arms is usually objecting. They feel defensive and are protecting themselves. Or this might just be the way they act any time they're conversing. Also, they might just be cold.

While sitting, one leg crossing another might indicate that the customer feels threatened; but again, this might just be a habit. However, watch out if the person is trying to wrap the body into a tight ball, or if the customer is always looking down, or away. A person whose eyes are wandering is probably distracted or disinterested; or he might just be tired of waiting for you to close the sale. Other possible indications of disinterest include yawning, toe tapping and drumming fingers.

When a person rubs his chin, or places his hands together in a prayerful position, he's either feeling superior or he might simply be thinking. A quick look away might indicate that the customer is thinking. A person standing with one hand holding a door handle is wanting to escape. Perhaps he's late for an appointment, or has a long list of chores ahead of him. When a customer rubs the back of his neck, he's tense and is probably beginning to have a headache.

As for your body language as a salesman, maintain a relaxed and prolonged eye contact with the customer. If sitting, keep your legs and arms open. This gives the impression of openness and honesty, and is often referred to as the "Abe Lincoln" stance. But don't force or over-control your body language. You might be sitting like Abe Lincoln, but your body might be rigid as steel with your hands clinched over the arms of a chair. There are over 90 muscles in the face alone, and a perceptive customer will see if you're faking or hiding something. The best advice is to be honest, confident and straightforward in everything you do or say.

Use wide and relaxed sweeping motions with your hands to emphasize certain things. For instance, when discussing how high or long a fence should be, gently sweep your hands up and apart, respectively. After you've handed a sales contract to a customer to sign, extend your arms with the palms of your hands open and up. Study professional actors; they use their hands, head and body positions as gestures to emphasize the words they're saying. The good ones know that body language is key to selling. That's what they actors are doing when they perform … selling themselves.

Don't intrude into the customer's personal body space or zone, which is usually 3 to 5 feet away, and *never* point a finger at the customer. Many perceive this as a threatening gesture.

Stay in Control

Next, learn to answer questions with questions. Question your potential customer's question or statement. This puts you in control. Picture this:

Joe Homeowner: "Can you build this fence within 30 days?"

Contractor: "Sure, I can do that."

Joe: "Can you do it in the next three weeks?"

Contractor: "Well, I think so."

Joe: "How about this week?"

Contractor: "Sorry, I can't do that."

You probably just lost the sale, and guess who was in control? Here's how you should have steered that conversation:

Joe: "Can I get this fence built within the next 30 days?"

You: "Mr. Homeowner, if I can finish the fence in 30 days, do I have the job?"

Joe can't play games with you any more. He has to give you an answer, either "Yes" or "No." If he says "Yes," hand him the contract and a pen. If he says "No," then you know that having the fence built within 30 days wasn't

his prime objection. Now you have to find out what is. Do so by asking another question:

> "Mr. Jones, quick completion isn't so important to you. What is the most important consideration?" Once again the ball is in his court. Now he has to think of an answer. You've confirmed that time wasn't the key. And you're about to find out how to make the sale. This is called *selling the objection back to the customer.*

Know When to Be Quiet

Are you a talker? If so, that's one habit you'll have to control to be a good salesperson. There are times to talk, and there are times to listen. When your customer asks for a direct answer to a question, talk. Give him a direct and complete answer. When you ask your customer a question, then *listen.*

Don't say another word until after the response is complete. When you ask a question, the person you're talking to has to come up with an answer. If you get impatient and start talking, the opportunity to get the answer is lost. He's off the hook.

Why is this important? The answer is a clue to the remaining objections. Until this last objection is put aside, you're not going to make the sale. Until you get the answer, silence is golden. It can put money in your pocket. Even if you have to sit dead silent for two minutes, do it. Let your customer have time to think and answer. This is especially true whenever you ask *the* major question, "Mr. Jones, when do you want me to get started?" It's hard to keep from talking during a long silence. But do it — if you want the sale.

Ask for the Order

You'd be surprised at the number of salespeople who don't do this. You'll get very little in life if you don't learn to ask for it. You'll reach a point in the negotiations when you think your customer is ready to buy. He'll be out of questions. Ask for the sale and then *wait for the response.* Chances are you'll close the sale. Asking doesn't always have to be verbal. Many times all you'll have to do is put the contract and a pen in front of your customer.

Remember, the customers came to you. They took the time to call you, meet you, and listen to you. That means they're serious about buying. Otherwise they wouldn't waste their time. True, most say, "I'm just getting estimates now." But don't leave it at that.

Look at it this way: Didn't you just take the time to meet with the prospect? Didn't you just spend an hour with him educating him about fences?

Didn't you just thoroughly prepare an estimate, complete with drawings and sketches? Then why just hand that estimate over to the prospect so he can take it to your competitor? That competition will use your estimate to cut you out of the job. While you're there with your customer, sell, *sell, sell!*

Be Fair to Your Competition

I just said that the competition will use your estimate to cut you down. Don't stoop to those tactics yourself. Don't badmouth your competition. It doesn't speak highly of you, and may cost you the sale. But you can point out that you give better service or quality. Say, "Mr. Jones, I think that after you review our conversation and my estimate, you'll agree that I'm the best-qualified fencing contractor in town." Or, "Mr. Jones, do your other estimates include sales tax and any necessary permits?"

The Multiple Buyer

You'll face one problem selling fences that usually doesn't crop up in other kinds of contracting. Until now, I've assumed that you'd be making a sale to a single customer. But fences often divide land and sit on the property line. Many times you'll have to deal with two or more adjacent property owners. One wants a redwood picket fence, and the other a block wall. One wants to spend twice as much as the other is willing to spend.

You have three choices.

1. Stay and battle with both of them; try to iron out their differences and close the sale. Your success is highly doubtful.
2. Make your presentation, then leave them to come to a decision by themselves. You may or may not get the job, depending on whether you sold the stronger or weaker of the two.
3. Suggest two fences back to back, each within their respective properties. You may get one or both or none. I've been caught in this position myself, but I can't give you a pat answer to this problem. The best solution is probably to give both parties an estimate for a joint fence, and leave it to them to decide.

I once lost a job for a joint fence to another contractor. Later, one of the parties called me. She was very unhappy with the fence, *and* with her neighbor. I'm rather happy that I didn't get that job!

Know When to Say No

Sometimes you'll run up against someone you just don't want to do business with. You'll develop a sixth sense for recognizing these troublemakers. They're the ones you can't satisfy, no matter what you do. They'll pick on your every word and action, and drive you nuts. Here's one trick I use to avoid working for this kind of person. I tell him I'd love to do the work for him, but the first date I have open is six weeks from now. That's usually enough to send him off to a competitor. Let some other contractor deal with those problems.

Don't *"Bait and Switch"*

A major complaint heard by consumer agencies is *bait and switch*. That's where a seller advertises a product at a *very* reasonable price, then delivers something else — usually inferior, or higher priced, or both. That's both illegal and unprofessional. You have a responsibility to your customers and your industry to avoid this kind of unethical behavior.

Another version of bait and switch is a store that advertises an item at a very low price, but when you see this item, you realize it won't perform as you had been led to believe. However, this store *does* have another item that just fits your needs. Only thing is, it's twice the price of the one advertised. The store knows that, just by luring you in, it's increased its odds of selling you the higher-priced item.

When Your Bid's Too Low

Sometimes you'll make a mistake and bid a job too low. What do you do? Or, rather, what don't you do? You could say nothing and substitute cheaper, lower-quality materials; or you could leave the job half done. But if you do either of those, you could lose your contractor's license — and, in my opinion, you deserve to. In any case, your reputation will suffer when your customer spreads the news all over town. And you may have to redo the job at your own expense anyway. That's worse than taking the loss for your mistake.

There's an alternative: Go back to the customer and tell him flat out that you made a mistake. If he's a reasonable person, he'll understand and may let you re-bid the job. But if he's out to find a bargain, he just got one. Take your licking with a smile and do the job professionally. We all make mistakes and we all pay for them. Maybe he'll ask you to bid on another job ... and, this time, you'll be more careful.

The solution to this problem is prevention. Know what you're doing in the first place. If you need a day or two to properly research and prepare your estimate, then take it. Don't guess. Don't rush the bid. Put everything in

writing. Be specific about what you'll do, what materials you'll use, and any extras you'll include. Here's a checklist:

- description of the work
- full materials description
- transportation or delivery charges
- rental charges for special tools or equipment
- subcontractor charges
- sales taxes
- permit and fee charges
- the date you'll start work
- estimated completion date
- payment schedule

This checklist does two things for you. First, it makes you think about the job and all the costs involved. Second, it forces you to tell your customers exactly what you're doing for them. If the customers come back later and say they want more, or that you're not doing what you contracted for, you have your agreement in black and white.

As a point of law, some states require that you include the items listed above in your contract. Public Works projects will require those items on your bid also.

There's a third advantage to a detailed quote. If you didn't close the sale during the first sales call, your potential customer is probably going after another estimate. Now he'll have your written estimate when he goes to your competition. Most of your prospects won't show your estimate to your competitor, but they'll certainly compare it with other estimates that they get.

Maybe the competition's price is lower. But he may not be as well organized as you are. If his estimate isn't as detailed as yours, it raises questions. The customer will wonder why your competition's bid didn't include certain items, or whether materials are the same quality as in your bid. Your prospect will question whether the competition really knows what he's doing.

As a precaution, I suggest you include this paragraph at the bottom of your estimate form:

> *This is an estimate of the materials, labor and services I will provide. Please read it fully, and compare it on the same basis with any other estimates you may receive. I trust that you'll keep this estimate in confidence. If you have any questions or want to change your original specifications, please call me right away at [your phone number].*

Also, be sure you have in writing on any proposal that the bid is good for only 30 days. With any luck at all, the customer will call you back and you'll have another chance to sell the job.

The "No Sale"

The *get lost* or *no sale* person is a tough person to counter. But there are ways to sell these people, too. Review the rules of salesmanship: Know your product, overcome the objection, ask for the sale, then shut up. A *no sale* is a clue you did something wrong. Either you didn't overcome the customer's objection, or you talked yourself out of the job.

A method sometimes used by the pros is to *give up* and walk out. Just pack up your things and leave. Be very quiet, as though you were upset. This person you've been trying so hard to sell for the last hour has beaten you. When you get to the door, thank them for their time and for listening to you. Then ask a question, or I should say, *the* question. "Mr. Jones, what did I do wrong? What did I do to offend you?"

> ***Always be honest with your customers.*** They may indeed decide to do the job you've bid themselves. If you've misled them and the job turns into a mess, they'll tell everyone they meet about your lousy advice. But if you give factual information and the job is a success, they'll highly recommend you.

Now that you're no longer a threat and the sales call is over, Mr. Jones will let his guard down. He sees that you're disappointed and downcast, so his natural instinct is to be sympathetic. People don't want to insult someone who's been beaten, especially if they're the ones who beat you. Mr. Jones will probably come out and tell you now why he didn't buy from you:

> "No, I don't dislike you; I think you're a fine fellow. I just didn't like the idea of you trying to sell me plain concrete block. I would have preferred something fancier."

You're back in the selling business, assuming you can offer fancy block! You answer, "Mr. Jones, is that the only thing keeping us apart?"

Now you can put together a better offer.

Here's another solution to the no sale. If the customer is going to build his own fence, offer to rent him the tools he'll need. Or offer to split the work with him. Or offer yourself as a consultant for an hourly fee.

If he takes you up on one or all of these offers, you still might turn it into a sale. If he wants to rent tools from you, explain what each tool is used for, the techniques for using them, and the dangers of using each tool. I wouldn't suggest renting out your best tools, of course. Rent only what you can afford to lose. And of course, don't rent out the ones you use yourself.

If the customer agrees to split the work, then describe in detail what each of you will do. Be sure to throw in a few comments to suggest how hard the job may be. If he wants to use you as a consultant, go into great detail about every part of the job.

See where this is leading? The more information you provide, the more your customer is going to wonder if he can do the work. Does he really understand

everything that's involved? Can he really use those tools safely? Does he really want to get his hands dirty … to work that hard? Chances are you'll wind up doing the whole job, and at your price.

Add-Ons

Here are some ideas to increase your sales by offering things your customers didn't even know they wanted until you told them:

1. Don't just sell a wall or fence; sell a maintenance contract along with it. This keeps you in contact with your customers so you're around for referrals.
2. If you're equipped to do it, sell a whole package that includes painting, plumbing, electrical work and anything else that goes with the job.
3. If an old fence or wall has to come down, contract for the removal. Many times you can use the salvaged materials on the same or other jobs. I have a friend in Michigan who removes old concrete and block. He breaks up the concrete and mixes it with new concrete as a filler in place of gravel. Then he sells it back to his customer as a new wall, walk, or driveway. He cuts his material cost by over 50 percent. Used lumber and brick are in demand in communities where a weathered look is popular. You can also sell used wire as scrap by the pound.
4. Sell *fancy.* Suggest ways to make the wall or fence look better or more personalized.
5. Sell at group rates. This is where you tell your customer that if he can get several of his neighbors to buy from you at the same time, you will discount the jobs by 10 percent. I know some roofers who do this regularly.

Money Talk

Quote your estimates in whole dollars — *don't* use cents. Better yet, quote a round number and give yourself a plus or minus percentage: Total cost: $1,500 plus or minus $75 (or plus or minus 5 percent).

If you quote an exact amount, i.e. $1,503.45, that's what you're stuck with. This is a point of law, and the courts will make you accept the figure you gave if you quoted to the penny.

I use a lump sum estimate. I do this because I know what happens when you break everything down into a very detailed estimate. For example, if

you show a labor cost of $1,000, and tell the customer it will take 40 hours to complete the job, the first question your customer will ask is, "How many hours do you think this will take?" If you tell him it will take 40 hours, you'll probably lose the job. He'll do the calculation: $1,000 divided by 40 is $25 an hour. That may seem like a lot of money to your customer. Most customers don't think about your business expenses. They think that you're putting that $25 in your pocket.

You could say the job will take 100 hours, in which case the charge would only be $10 per hour. But I'll bet your customer will be watching the clock while you work. He'll want a rebate when he finds out you only worked 40 hours.

Some fence contractors charge on a time-and materials basis. If you do that, include a maximum and minimum charge for the job. You might say, "Mr. Jones, I charge $20 an hour for labor. I don't mark up the material cost and you'll receive copies of invoices for all materials I use. I estimate that the least I can do this job for is $900. To be fair to both of us I'll put a maximum cap on the job. Does $1,000 sound fair?"

As I said before, sell the job, then the price. If you've sold the job, the price usually won't be an obstacle. Notice I said *usually.* You'll come across all sorts of people. Some will balk at the price. Some will always want just a little bit better deal, no matter what you do. Some will ask for credit. Part of being a good salesman is knowing how to counter the customer's objections to price. Here are some suggestions.

A customer who balks at price still wants the job done, but he wants to see if he can get it done cheaper. Tell him, "Yes, I can do it cheaper. I can use #3 common pine instead of redwood, iron nails instead of galvanized nails, and space the boards ½ inch apart instead of ¼ inch. But the fence will probably only last 10 or 12 years instead of 15 or 20. I fully understand that you have a budget and appreciate your wanting to stick within that budget. Maybe I can offer you some alternatives."

What did you just do to this person? First, notice the compliment about his efforts to stick to a budget. That's a point in your favor. But, you sold him insecurity as well. He really doesn't want an inferior fence. He may just sign the contract as it stands, or he may ask for the alternatives. What are the alternatives you're prepared to offer?

If you're smart, you already have about $100 extra built into the total price. You could offer a $100 discount without hurting yourself. The next alternative is to offer to share the work with him. "Mr. Jones, we could cut $150 out of this estimate if you want to do the painting and cleanup after I install this fence." You just offered to be the customer's partner and save him some money. Mr. Jones will wonder if $150 is worth his time and effort, and probably come to the conclusion that it's not.

If he does accept your offer, don't worry about it. Just change the contract to reflect that he is doing that portion of the job. Don't worry about it? No, because the $150 you knocked off is only about half of what you figure it would have cost you. You still make a profit.

Now, how should you handle the person who's looking for something for nothing? Have something available, but don't give it to him until he asks. I have to admit that I like to get a little something extra once in a while. Most of us do when we spend a lot of money at one place. It gives us a small sense of being on top of things; we've made a good deal. Have a few under-$10 gifts available like pens or refrigerator magnets. Print or engrave your ad or logo on the item. Then, when you've made the sale and the contract is signed, give the customer your gift as a goodwill gesture.

I had one guy who really wanted to beat me out of something extra. He'd already made up his mind to buy from me, but he wanted to feel like a winner. He sat with the contract in front of him for more than an hour. He finally complimented me on my $5 battery-operated calculator. All I had to do was slide it over to his side of the table and say, "It's yours." He signed the contract within 10 seconds.

Financing

Once in a while you're going to meet a customer with less than a hundred dollars in his checking account. He wants the fence but wants to pay for it in installments. There's a difference between *progressive* payments and *time* payments. Progressive payments are standard in the contracting business. The customer makes a down payment, then pays you at various stages of the work, according to your written agreement.

Do you offer credit? If you don't, I suggest you look into doing so. Having credit available to your customers can be a key selling point. Many people can't afford an expensive fence or wall. Others just don't want to take the money from their savings account.

The advantage of credit card sales is that you should have no collection problems. The bank or card company assumes the responsibility for the debt, and you get paid in full. And, as a sales tool, you can offer a discount to your cash customers.

Now, let's move on to some of the laws governing contractual sales. As a contractor, you have certain obligations under the law. Your customer also has obligations to you. Of course, laws vary from state to state. All I can do is flag the issues you might want to explore. In any case, the law of the state where the work will be done will apply.

Contractor's Law

Where a contractor's license is required, an unlicensed person can't quote a price for any job where the cost of labor and materials exceeds some threshold amount, usually a few hundred dollars. To operate legally as a contractor, you must have a valid license. You'll probably have to show your license number on any advertising, including signs, and on your contract form.

Licenses Are Trade Specific

Licensed contractors can only advertise for work in the field in which they hold a valid license. Thus, a painting contractor can't advertise as a fencing contractor. If you hold a painter's license, you can't use "Will's Painting and Fencing" as your DBA unless you're also a licensed fencing contractor.

Home Improvement Sales

The term *home improvement* means any remodeling, addition, alteration, repair, modernization, or addition of value to a residence or residential property.

A home improvement salesperson may solicit, negotiate, and sell home improvement contracts. Salespeople employed by a licensed contractor don't need a license. If they work as an independent contractor, they need a license in the field they're selling. In some states, contractors must register the names of their salespeople with the Contractor's Board.

There's a misconception that home improvement salespeople must be paid in full before any other worker involved in the execution of the contract is paid. This isn't true. The salesperson might be paid last.

Payment Schedules

Some states limit the down payment you can ask for when the contract is signed. The total of the down payment and progressive payments may not exceed 100 percent of the contracted price for the job. The customer doesn't have to agree to give you a down payment, and you're not required to accept the contract if he doesn't.

During progressive payments, the customer may hold back 10 percent of the total contract amount to be sure the work fully complies with the contract.

Contracts

Contracts may be written or oral. Beware the latter. Some states, California, for example, completely prohibit oral contracts for home improvement work. The contract may be between a contractor and a tenant, a contractor and an owner's representative, or a contractor and the owner. An authorized salesperson can represent a contractor. A contract the salesperson negotiates is fully binding on the contractor.

If your fence or retaining wall is built for the occupant of a residence, most states set specific standards for the contract. A California home improvement contract is required to include the following:

- the entire contract must be in writing, legible and in at least 10 point type
- the title "Home Improvement Contract" in boldface type
- the following: "Any Notice of Cancellation can be sent to this address"
- the name and the address of the contractor
- name and registration number of any salesperson
- the date the contract was signed by the owner
- in 12-point bold type: "You are entitled to a completely filled in copy …"
- the contract price in dollars and cents
- an approximate date when work will begin
- what constitutes substantial commencement of the work
- an approximate date of completion
- the heading "List of Documents Incorporated into this Contract"
- the down payment can't exceed $1,000 or 10%, whichever is less
- a payment schedule showing the amount due by job phase
- California's Mechanics' Lien Warning
- a statement on release of lien in exchange for payment
- confirmation that the contractor carries (or doesn't carry) liability insurance
- the name and phone number of the insurance carrier
- information about the Contractor's State License Board
- the statement on performance and payment bonds
- signature of each owner (usually husband and wife)
- notice of California's 3-day right to cancel
- California's checklist for homeowners
- information about commercial general liability insurance
- a change order form incorporated into the agreement
- notes about extra work and change orders
- a statement on requirements for a change order
- receipt acknowledging delivery of California's 3-day right to cancel
- California 3-day Notice of Cancellation

- Federal right of rescission (Reg. Z) notice
- explanation of the effects of rescission
- job specs have to include a description of the site and significant materials to be used
- job specs have to include brand names if brands were mentioned during negotiations

Failure to include any of this information could risk suspension or loss of your license. Like most states, California doesn't offer any help in preparing legal contracts. You're on your own. Most states aren't as bad as California. But New York, Florida, Pennsylvania, Illinois, Nevada, Hawaii, Massachusetts, Oregon and New Jersey come close. In most of these states, a contract for fencing or retaining walls that doesn't comply with state law won't be enforced by state courts. That means if you get into a dispute with the owner before final payment, you're probably not going to get paid.

Craftsman Book Company publishes *Construction Contract Writer*, which lets you draft a contract in minutes. Answer the questions and the program writes a contract that meets job requirements and complies perfectly with the law in your state. For more on CCW, go to https://www.constructioncontractwriter.com.

Customers Who Don't Speak English

If you negotiate a sale in a language other than English, the contract and rescission notice must be in the language of the negotiation. If you make your sales pitch in Spanish, then the contract must be in Spanish, also. You can include an English copy if it's identical in content, but the Spanish copy will be the legally binding one.

Recovering Your Property

Once you complete a job, you have 10 days in which to demand and recover anything you've left at the customer's property. After 10 days, the customer may keep your belongings free of charge.

Substitutions and Price Changes

You can't vary from the contracted price or materials without getting prior written approval from your customer. If you find you're losing money on a job, you may try to renegotiate the contract. If the customer doesn't agree to renegotiate, you're legally compelled to fulfill the contract under the stated terms.

Bonds, Liens and Permits

In some states, if you bid and accept a job for more than a few hundred dollars, you must file notice of the contract with your county recorder. You must also show that you have any license bond required by state law. You must notify your customer that you're operating under the current lien laws, and give your customer a summary of the lien law provisions.

You'll also need to get a building permit from your city or county. Unlicensed contractors aren't exempt from this. Before you start building fences and walls, find out what rules and restrictions apply. You can be fined or lose your license if you don't comply with them.

A property owner doesn't need a contractor's license to build his own fence, wall or building. He may even hire someone to help him. But he still has to get the building permit required by law.

Holdbacks

Your customer can withhold money from you in certain cases. If you subcontract part of the job, and you haven't yet paid the subcontractor, the owner can hold back a total that doesn't exceed what you owe the subcontractors.

Contractors' Claims

In most states, a contractor who isn't paid what he is due can place a lien on the property. When the property is sold, the new buyer will probably demand that the lien be cleared before title passes. An unlicensed contractor can't file a mechanic's lien on the customer's property.

Mechanics' lien law is different in every state and the forms are also different. Be sure to use the form that's legal in your state. The contractor is the *claimant* in the lien, and the customer is the *defendant.* The lien claim must include the following information:

1. a description of all the services, labor, materials, etc., the contractor will use to perform the contract
2. the customer's name, the contractor's name, and the names of any subcontractors or tenants involved
3. the amount of the claim after deducting any prior payments
4. a legal description of the parcel of property that received the improvements, and its legal owner's name

Another avenue of claim by a licensed contractor is the *stop notice*. A stop notice is a lien on funds, not property. It's used where a third party supplies construction financing, or where a construction trust is set up by the customer to pay the contractor.

The information on the stop notice is the same as that on the mechanic's lien. In most states you'll have to deliver a copy of the stop notice to the customer and to the agency holding the funds. You also have to supply a bond equal to 1¼ times the amount of the claim. If the claim goes to court and you lose, this bond covers your liability.

If the agency holding the funds has paid subcontractors or returned money to the customer, that agency may be liable for your payment if you win the suit. If the customer is a public authority, such as a city or utility district, the stop notice is your only method of claim. You can't place a mechanic's lien on public property.

When you receive payment or release of payment, you have to file a release of mechanic's lien. You need the form approved in your state.

The Construction Trust Fund

A *construction trust fund* is also called an *express trust*. It's an agreement between the customer and the contractor and any subcontractors or workers. It's money set aside in trust by the customer for payments due under the contract. It's somewhat like a compliance bond, in that money is only released as specified parts of the job are finished. An express trust has the effect of both a stop notice and a mechanic's lien. A lien can be placed against the funds being held. But any claim in excess of the fund can become a claim against the property.

Customer's Recourse

Completion of a construction job may be delayed for various reasons. When that happens, the customer has a couple of choices. The first choice is always to put up with the delay. In some states, the customer can hire another contractor to finish the job *after waiting* 30 days from the last time any work was done. Next, the owner files a *notice of cessation*. The notice has to show the legal description of the property and the owner's name and address. It also has to give the contractor's name, and the last date any work was done. Once this happens, the owner can legally withhold any further funds and hire another contractor to finish the job.

Protect Yourself

As a contractor, you have to protect your business from these claims. If your state requires, you may have to file a *notice of completion* when you finish the job. If you don't, and the customer files a notice of cessation, you could lose your right to collect.

You file the notice of completion within 10 days after finishing the project. Then you have 30 days (if you're a subcontractor) or 60 days (if you're the prime contractor) to file a mechanic's lien.

Here's the sequence of events enforced in some states:

1. Your customer signs a contract and you begin work.
2. Within 30 days of starting work or delivering materials to the job site, give your customer a copy of the preliminary notice form. It tells the customer that you'll file a mechanic's lien if he doesn't pay you.
3. After completion of the job, file the notice of completion.
4. If you haven't been paid within 30 days after the notice of completion, file the claim of lien.
5. Within 90 days of claim of lien, file for *lien foreclosure action*. Also file a *Lis Pendens* and deliver your stop notices. (A Lis Pendens is a notice that a lawsuit is pending and tells all concerned parties that you are suing.)
6. Near the end of the 90 days, you must foreclose on the property. The only way to prevent foreclosure is to give a credit for payment to your customer. This extends the foreclosure an additional 90 days. You can do this for up to one year, then you must complete the foreclosure or lose your claim.

The Last Resort

In case of a major dispute, the last recourse for all concerned is the court system. If the claim is small, go to small claims court. The cost to file is low and both parties meet face to face with the judge. Attorneys aren't usually permitted. The customer can also use small claims court to file a suit against you to comply or do the work.

If the claim exceeds a given amount of money, you'll have to go to a higher court. You'll probably need an attorney. The cost could be thousands of dollars. There can also be a significant delay before your case goes to trial.

Remember, laws vary from state to state and change every year. Check with your local authorities and consult an attorney if you have any doubts.

One last appeal: Get it in writing! It's much easier to make claims under a written contract than an oral one. As Samuel Goldwyn said, *"A verbal contract isn't worth the paper it's printed on."* And even though there are many legal ways to resolve a dispute, it's always better to avoid one in the first place.

This page left intentionally blank

Chapter 14

Safety on the Job

IN THIS CHAPTER, I'LL point out some of the dangers facing every fence and retaining wall contractor, and what to look out for on a jobsite. I'll also give you some tips on how to prevent the most common types of accidents, and suggest some things you can do to work safer, no matter what the law requires.

In the last 30 years both state and federal governments have really emphasized job safety. They've passed laws intended to make illegal everything that's likely to be dangerous. No matter whether you think these laws are foolish or wise, they're the law. Let this chapter be your guide to federal and state law requirements.

If this sounds boring and you're tempted to skip over this chapter, fine. Go on to the next chapter. But there will come a time when you need a good reference on jobsite safety, so have this book handy.

Here are three reasons safety is important:

1. Safety pays — and can save you a lot of money. A good safety record will reduce your insurance premiums.
2. The contractor's license exams emphasize safety. You have to be familiar with basic safety principles to pass the exam.
3. Your own personal welfare may be at stake. If you just spend 20 minutes thinking about jobsite safety, it could save your life or keep you out of the hospital. The time you spend reading this chapter may be well rewarded. After all, there's not a lot of point taking on a job if you're going to get injured doing it.

Fence or wall building isn't always done under ideal conditions. Walls and fences are often built on the edges of cliffs, close to water, on sloping ground, and in dense underbrush. Every fence builder uses equipment and tools that can inflict severe injury when used improperly. Bulldozers, backhoes, axes, picks, and arid fence stretchers are just some of the dangerous tools you'll use.

You'll be building fences and walls outdoors, in areas populated by snakes, bugs, wild animals and poisonous plants. Retaining walls are often built on high and unstable hillsides — that's why a retaining wall is needed. There's an element of risk in most fence jobs. And it's all too easy to get engrossed in what you're doing and ignore the danger. In every case, good judgment and common sense are your best protection. This chapter should help you spot potential problems so you can eliminate them.

Safety is Everyone's Job

Who's responsible for safety? There's only one answer: *you* are. No matter *who* you are. Whether you're a homeowner, contractor, subcontractor, employer, or employee — safety comes first.

The best defense against a potential loss is understanding the dangers. It's knowing the hazards of the job and the jobsite, and taking the proper precautions. It's being prepared to handle the inevitable emergency. It's taking care and using common sense. It's training yourself and your workers how to use proper tools and techniques. It's also the *law*. Some contractors conduct a short safety meeting before each project begins, pointing out potential dangers unique to the job.

Safety precautions are required by various authorities. Some you may impose yourself in the form of company safety regulations. The building inspector, your insurance company, and state and federal agencies also have safety requirements. Inspectors can close you down if they find your work or methods unsafe. Insurance companies will refuse claims or cancel policies. If you're convicted of negligence, state and federal health and safety agencies and contractor's licensing boards can fine you or revoke your license. Some violations carry criminal penalties.

The primary rule-setting body in the field of safety is OSHA, the Occupational Safety and Health Administration. They can inspect your work place (whether or not you're a licensed contractor), and they can do so without advance notice. Their main purpose is to control, inspect, and instruct employers and employees on safe operating procedures at the work place. For the most part they do a good job. But, like so many government agencies, they're understaffed and so they only spot check or respond to complaints. They do require that all serious job-related injuries be reported to them immediately by phone. Employers are also required to file a written report with their state's division of labor statistics and their insurance carrier.

Many states have their own OSHA department. State OSHA departments usually report to the state's Department of Industrial Relations. Contact them for more information and a copy of their official rules and regulations. The rules

that follow may or may not apply in your state. State laws vary. And new laws are passed every year. Get specific information from your state OSHA office.

General Safety Regulations

Here are some of your safety responsibilities as an employer:

- Every employer must display state-issued safety posters at their place of business.
- Employers are required to see that all employees use safety equipment provided for them or required for the job.
- Prior to the start of work at a jobsite, the employer is to inspect the jobsite. Then the employer is to describe all unsafe conditions and give safe operating instructions to employees.
- If a chemical is involved, such as a wood preservative, the employer must inform the employees of the dangers of the chemical — possibly in writing.
- Make special note of any eye hazards. Furnish protection in the form of glasses, screens or shields, and eye-washing stations.
- Employers must provide a first aid kit on the jobsite, housed in a waterproof container. The kit should include items to treat any injuries that may be expected at that jobsite.
- Employers must furnish potable water at the jobsite. Potable means drinkable without a health risk. Water containers should have a fountain or faucet and be labeled "potable drinking water." People shouldn't have to dip water from the container in order to drink. Either provide each employee with a cup or use disposable cups. Clearly label any non-potable water on the jobsite. Non-potable water is water that may not be safe to drink or wash in, like water stored for use in toilets or for fire fighting, or taken from streams, ponds, lakes or rivers.
- Employers must supply toilets at the jobsite. There must be one for each 20 employees. You can substitute urinals, as long as there are at least half of the number of toilets required. If you have 100 employees, for example, you could have three toilets and two urinals. If sewer and water are available, you can use standard flush toilets. If not, use chemical, combustion, or recirculating types. Maintain the facilities at all times. They need to have an adequate supply of toilet paper, be clean, and work properly. Onsite facilities aren't required for a mobile crew that has transportation to a nearby toilet facility.

Polluted Air

On jobsites where workers will be exposed to gases, vapors, fumes, dust, or other airborne contaminants, you're required to provide (and the employee is required to use) an approved respirator. The only exception is if you have exhaust ventilation sufficient to provide a minimum of 100 cubic feet per minute air velocity. If you have this amount of ventilation, then the use of a respirator may be optional.

If your workers are welding or working with beryllium, zinc, lead, mercury, cadmium, fluorides, or chromium, you *have* to supply (and your employees *have* to use) an air respirator … no matter what ventilation system you have. Even if your employees are working in the open air, they have to use a respirator. The fumes from these metals can kill.

Excavation

OSHA's rules for excavation are brief:

1. If employees are working in an excavation 5 or more feet deep, the hole must be shored or sloped to prevent a cave-in. You may need a permit.
2. Inspect excavations of less than 5 feet for safety and possible ground movement. In excavations of 4 feet or more, provide a safe way to enter or exit every 25 lateral feet. You can usually meet this requirement with a sloped side trench.
3. Adequate bracing of an excavation is required. If the soil is unstable, use trench bracing.
4. Store bracing materials safely. If bracing materials are going to be handled manually, you can't pile them more than 16 feet high. If you use a crane or forklift, piles can be 20 feet high. This applies to any stacked materials.

Removing Obstacles

Many fences are built over, around or through obstacles like trees, rocks or hills. On some jobs you may have to clear these obstacles by blasting with explosives. This is dangerous work. Most states require a special license for blasting work.

You're required to provide safe storage for any explosives. Store explosives in a bunker or magazine located at least 100 feet away from any high voltage

electrical lines (250 volts AC or more), and at least 25 feet from low voltage lines. Store caps separately from explosive materials. There must be at least 25 feet clearance to the nearest power distribution circuit or light. Prohibit smoking, flame or ignition sources within 50 feet. Place signs to clearly mark the boundary of the storage safety perimeter.

Poison Ivy

Poison ivy is found throughout the U.S., southern Canada and northern Mexico — except in the far West, deserts and high altitudes. Poison oak, a similar species, is found in all those places and also in the Southeast. Both contain oil in their leaves, vines and roots called urushiol that's very potent and can cause a severe and itchy skin rash. The oil is extremely stable, so it remains on tools, clothes, etc. for years. Do not burn poison ivy or poison oak. Even the smoke, if inhaled, can infect the mouth, throat and lungs!

This rash can take days, if not weeks, to heal. If anyone gets this oil on his skin, he needs to wash it as soon as possible with cold water and spray the infected area with a deodorant containing aluminum. If your work area has these menacing plants nearby, make sure all your employees have this information and your first aid kit is well stocked.

If someone is ever stung or bitten by a poisonous insect, spider or snake, try to catch it and take it with you to the hospital or clinic. This will help in identifying the source of the injury and the best remedy.

Dangerous Creatures

If you've worked much construction in rural areas, you know to look out for spiders and snakes. But there are other things to watch for, also. It's wise to be aware of the kinds of poisonous insects, reptiles, etc. you can come in contact with in any particular area. I once worked a construction job in Gila Bend, Arizona where we had to deal with (yup, you guessed it) Gila monsters.

Snakes

The most common venomous snakes in the U.S. are rattlesnakes and cottonmouths (water moccasins). The rattlesnake will usually give a warning with its rattles when someone comes near, but the cottonmouth doesn't have rattles. Cottonmouths are much more aggressive than rattlesnakes. Since snakes are cold blooded, they prefer shade during a hot, sunny day. They often lie next to a food trail where small animals and rodents pass. Both of these types of snakes can be extremely difficult to see, due to their camouflage scale colors that blend in with the surroundings. (See Figure 14-1.)

Snake bites can cripple a person for months, and even kill. A snake's venom is basically a meat tenderizer (what a mental image!), so it destroys any

infected muscle tissue. A friend of mine in high school was bitten by a rattlesnake in the early fall and he didn't return to classes until after Easter vacation. And he was still walking on crutches.

If a worker is bitten by a venomous snake, keep him calm and call 911. Snake venom is spread through the bloodstream, so the less the victim moves, the less likely the venom is to spread up a limb and throughout the body.

Have the victim lie down with the infected limb lower than his heart and keep him immobilized. The infected limb will swell, so remove any rings, watches and. Treat the victim for shock and keep him warm, and wash the bite with soap and water.

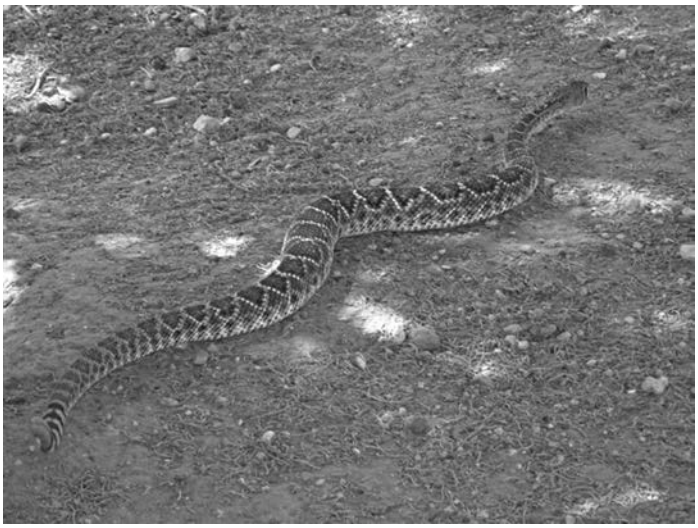

Courtesy of Michael Atcheson

Figure 14-1
Diamondback rattlesnake

Place constricting bands about two inches above and below the bite, but not on either side of a joint, such as a knee or elbow. The constricting bands can be soft material, such as a handkerchief. Keep the bands moderately tight — about the same as the pressure you feel when you're having your blood pressure checked at the doctor's office. This way, you'll only restrict lymphatic flow, not blood flow. Don't use a tourniquet! Stopping the blood flow completely can result in the loss of a limb.

Don't ever use a scalpel to cut a snake bite. Cutting a wound will cause tissue damage and could increase the spread of toxins throughout the body. Applying suction cups to the bite is OK, provided it doesn't delay your getting the victim to the hospital. Also, don't apply ice packs to the wound. This often makes the injury worse.

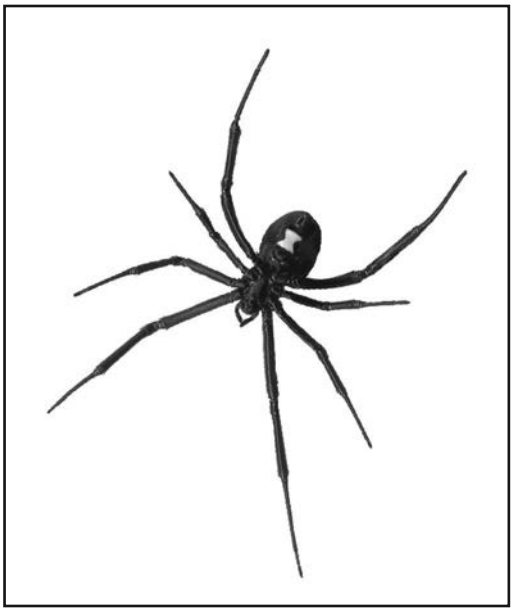

Courtesy of K.W. Grubbs

Figure 14-2
Black widow spider

Poisonous Spiders

There are two types of extremely poisonous spiders in the U.S.: the black widow (see Figure 14-2) and the brown recluse. The adult black widow is over an inch long. She has a crisp black color (no hair) with a red hourglass marking on a spherical abdomen. The venom is normally not fatal to a healthy young person, but it can be to young and old people.

The bite will begin to swell immediately. Within 30 to 90 minutes the victim will begin to feel severe pain and muscle cramping that starts in the limbs

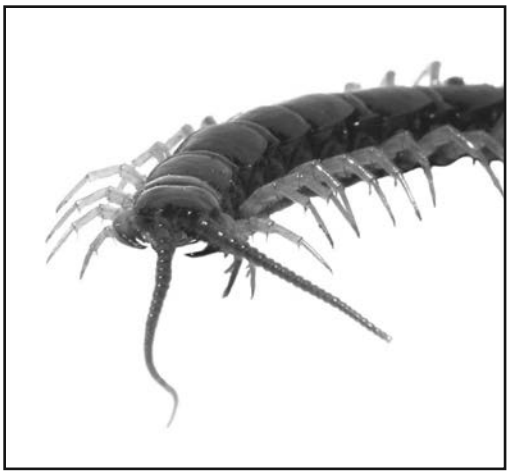

Courtesy of K.W. Grubbs

Figure 14-3
Poisonous centipede

and spreads through the back and chest. Narcotics and muscle relaxants will help relieve the pain and cramping. Symptoms usually subside within 5 days, but the muscle pain could last for up to 3 weeks.

The brown recluse is smaller than a black widow with a hairy brown body. They're found in dark environments that aren't often disturbed, such as under rocks or inside trees. Its bite is extremely painful and the venom can destroy tissue and disfigure the skin, leaving a bad scar. The bite will cause swelling and become reddish. The victim can be immobilized for days due to the throbbing pain. Apply ice to help relieve the pain and use pain medication.

Scorpions

Although most scorpions prefer and warm and dry environments such as southern California, Arizona and New Mexico, they can also be found in mountain ranges as high as 12,000 feet. A scorpion sting can be very dangerous, more so to young and old people. When a victim is stung by a scorpion, he'll feel an immediate burning pain. The wound will also swell and begin to feel numb. In severe cases, the victim will have blurred vision, roving eye movement and twitching of muscles. Wash the wound with soap and water and elevate the wound to heart level. Seek medical attention in severe cases.

Centipedes

Centipedes live primarily in the southern United States. A centipede (See Figure 14-3) can inflict a painful bite, using its two front claw-like legs as hypodermic syringes that puncture the skin and inject venom through hypodermic-type tunnels. The bite causes redness, local swelling and tissue damage. The pain can last from a few hours to several days. The bite can also cause intense itching and local tenderness, as well as headache, nausea, dizziness and increased blood pressure. Wash the wound with soapy water, and apply ice and a local anesthetic. Pain medication and antihistamines will help the symptoms.

Wasps

Disturbing a wasp nest can result in death, especially for people who are allergic to the sting. Only the female has a stinger capable of several stings. Once an attack is underway, a nest of wasps will pursue and sting until the victim reaches safety. The best way to avoid an attack is to stay far away from the nest. It might even be necessary to have a professional exterminator get rid of the nest.

Stinging Caterpillars

Stinging caterpillars have spines — hollow, quill-like hairs connected to poison glands — that can cause reactions such as itching, pain, burning, and intestinal problems. The best first aid is to place a piece of scotch tape over the affected area and strip off the tape to remove the spines. Washing with soap and water helps remove some of the poison; and ice packs or baking soda will reduce the stinging and swelling. These critters can be eliminated by spraying certain pesticides, but that's not really a practical option on most jobsites.

Many stinging caterpillars brightly colored, but not all. Depending on the species, they can be found anywhere from the southern U.S. through southern Canada — so the best rule to follow is to assume that any type is dangerous, unless you're sure.

Hauling

Most fence and retaining wall contractors have to do some hauling of materials or soil. Here's a summary of typical hauling regulations:

- Trucks have to be equipped with lights, brakes, fenders, and applicable safety equipment. One exception: You don't need fenders on a vehicle that can't exceed 15 mph.
- If you use a crane, hoist, power shovel, loader, or other heavy equipment to load the vehicle, the hauling vehicle must have a protected cab. This shield must be strong enough to protect the vehicle's operator from injury in the event a load is accidentally dumped on the cab.
- All construction hauling vehicles of 2½ cubic yards capacity or more must be equipped with an automatic backup sounding device: a horn, bell or beeper. You must be able to hear this sound clearly for a distance of 200 feet, and it must activate immediately when the vehicle backs up.
- Inspect all haulage vehicles once each shift, preferably at the beginning of the shift. Check brakes, steering, and other control devices; the operator can make this inspection. Keep an inspection log and have the operator fill it out daily.
- If there's danger to other personnel, traffic controls are required at the jobsite. These controls can be signs, flags, flaggers, or barriers.
- Cranes, cableways, or derricks can only be run by licensed operators. If the equipment is capable of lifting three tons or more, the operator must be tested and licensed by the U.S. Department of Labor. A licensed civil, mechanical, or structural engineer may give this annual exam. The

equipment itself must also be certified. Keep a 5-pound Type BC fire extinguisher near cranes.

Fire Extinguishers

You're required to have a fully-charged 5-pound type BC fire extinguisher within 75 feet of any construction area. Also keep extinguishers in or near any heavy equipment you're using. Make sure everyone on the job knows where the extinguisher is and how to use it. You're not permitted to use carbon tetrachloride extinguishers.

Damaged Tools

Don't try to save money by using damaged or worn out tools. Repair or replace them — you'll save money in the long run. Don't use axes and picks with handles that are rotted, split, or loose. Dull saws and drills slow the work and do a sloppy job. Worse, they can slip or break suddenly.

Ladders and Scaffolds

"I'm not going up whether you hold it or not!"

You'll need these if you build balconies or second story railings. OSHA has strict rules for ladders and scaffolds. Nearly all ladder and scaffold manufacturers build products that comply with the law.

But you still have to use the equipment correctly:

1. Maintain all ladders in good working condition. Remove any ladder from the jobsite if it has broken, weak or missing rungs.
2. Use all ladders within their rated load capacity.
3. Brace ladders so they won't slip or tip. Step ladders don't have to be braced.
4. Ladders you use as a platform for getting onto a landing must extend 3 feet above the landing. By the way, if you use a landing as a loading area, it must be at least 4 square feet and a minimum of 20 inches wide.

5. The rungs on ladders must be spaced no more than 12 inches apart, must be equally spaced (give or take 1¼ inch), and be at least 11½ inches wide.

If you build your ladder on the job, you must meet certain specifications:

1. For ladders up to 12 feet in length, the inside width of the base rung must be at least 16 inches. The minimum width is ¼ inch less for each successive rung up the ladder.
2. The rungs must be of 1 x 3 or heavier lumber. The rails must be of 2 x 3 or heavier lumber.
3. For ladders over 12 feet and less than 20 feet in length, the bottom rung must be at least 18 inches wide, the rungs 1 x 3s or better, and the rails 2 x 4s or better.
4. Between 20 and 26 feet, the base rung must be at least 19 inches wide, the rungs at least 1 x 4s and the rails at least 2 x 6s.
5. Don't use double-headed nails on ladders. Use at least 8 penny nails. Safety specs require that rungs be nailed to the rail with three nails on each side.
6. You can support rungs one of two ways. Either cut a maximum 1½-inch-deep slot into a 2 x 4 rail for each rung, or use blocking or straps to support the rungs.

Here are some safety tips for using ladders. They're just common sense rules, but they're worth repeating:

- When you use a ladder, don't put it where it's going to be in the way of people or equipment.
- Don't set up your ladder in a passageway, doorway, traffic lane, or driveway.
- Don't set up a metal ladder within 4 feet of a power line.
- Don't stand on the top rung of a ladder.
- Don't place scaffold planks on the top rungs of step ladders.
- Don't tie or lash two or more ladders together to gain more height.
- Keep the ladder within reach of the work you're doing. Don't lean or stretch.
- Always place the ladder on a firm surface.
- Don't use a ladder that has broken or split rails or rungs.

Extension Ladders

Extension ladders can't exceed 44 feet in height, including the lap section. Two-section ladders of up to 33 feet must have a minimum 3-foot lap. Two-section ladders of 33 to 44 feet must have a minimum 4-foot lap. Three-section ladders must have a 4-foot lap at each lap.

Scaffolds

Where a ladder isn't safe, you can use a scaffold. Scaffolds shouldn't be made of piles of rock, block, brick, lumber, or other building material. They should be platforms designed for safe working.

Scaffold platforms must be a minimum of 14 inches wide. If the platform is made of lumber, the lumber has to be structural grade. Use dressed 2 x 10s or 2 x 12s nailed or cleated together. (*Dressed* means milled lumber, not rough cut.) The platform can't be wider than 36 inches. Maximum spans are easy to remember: 2 x 10 is 10 feet, 2 x 12 is 12 feet.

I don't recommend you build your own scaffolds. There are few places where you can't rent code-approved scaffold sections when you need them.

If a wood pole scaffold is over 60 feet high, it must be designed and built under the supervision of a licensed civil engineer. All scaffolds of any material that are more than 125 feet high must be designed by a licensed civil engineer.

Rope

At times, you'll use rope to pull, haul, or lift materials, or as a safety line for workers on hillsides or scaffolds. Use 5/8-inch, 4,400-pound breaking strength manila rope. If the rope is old or worn, the maximum safe load is 600 pounds.

You can use sisal rope if you downgrade the breaking strength. Sisal rope has 80 percent of the strength of manila rope. Sisal is a white fiber material, primarily grown in Mexico.

Power Tools

Although it's not required, it's better to use power tools with key locks to prevent unauthorized use. Always disconnect the power before you change blades or other moving parts. By disconnect, I mean *pull the plug!* You don't want any surprises when you start to pull the old blade out.

OSHA has a number of rules for power tools. Following are some highlights.

Airless Sprayers

Chances are you'll be painting a fence or two during your career as a fence contractor. The fastest way to do this is with an airless spray rig. An airless can pump out a lot of paint very fast since it uses pressures in excess of 200 psi. This makes it a dangerous tool. OSHA requires an automatic or visible manual safety on the gun to prevent accidental discharge of the paint. A tip guard is required to keep the tip from coming in contact with the operator.

Beware. Pressures are high enough that it's dangerous even if you don't touch the tip. Never try to check spray pressure by putting your hand in front of the tip and spraying; you'll inject paint into your skin. If you have a gun that doesn't have a safety, install a diffuser nut. This prevents high pressure discharge during tip replacement.

"Never try to check spray pressure by putting your hand in front of the tip and spraying; you'll inject paint into your skin."

For more information on airless painting, order a copy of *Painter's Handbook.* It has a good section on airless spraying. There's an order form in the back of this manual.

Air Compressors

You'll use many air-powered tools: Drills, nailers, troweling machines, saws, and painting outfits are all available air powered. If you use air-powered equipment, you'll need an air compressor. Your compressor should be portable, and powered by a gas motor.

Manufacturers of compressors and compressed fluid tanks design to meet OSHA and other codes. Be sure your equipment has safety blow-off valves and drain valves. OSHA recommends that you drain the compressed air tank of liquid once a day, and pop the safety valve at least once each week. If there's a belt or fan, it should be covered so that no one can touch it while it's running. Block the unit, or lock its wheels to prevent it from rolling during operation.

Nailers

Most fence contractors prefer nailers over hammers. A nailer can make your work go faster with less effort. You can get electric- or pneumatic-powered drivers for nails or staples. But don't use nailers within 10 feet of other people. Disconnect the unit when you're not using it. Never place your hand behind a board that you're nailing with a pneumatic nailer. If the nail or staple being driven is longer than the thickness of the board being nailed, it could penetrate your hand.

Table Saws

If you use a table saw, be sure it has a hood or guard that covers the blade's teeth at all cutting depths. This guard should adjust itself automatically to the

thickness of the material being cut. You can use a manually-adjusted guard if you adjust it to within ½ inch of the material you're cutting. The blade must also be covered on the underside of the table platform.

If you use the saw for rip cuts, install an anti-kickback device. This prevents the blade from throwing or kicking the material out of the saw. Use a push stick to feed material into the saw if pushing by hand is dangerous to the operator. It keeps the operator's hand clear of the blade area.

Everyone who operates power tools should be trained and qualified to use them. Some companies issue operator's cards when an operator has been qualified to operate the tool.

Portable Circular Saws

The portable circular saw should have a blade guard that automatically adjusts to the thickness of the material you're cutting. Be sure a shield is in place that permanently seals the upper part of the blade from possible contact.

Radial Saws

These must have a guard that covers the *arbor* (the toothed portion of the saw blade), as well as the upper half of the blade. The blade must be designed so that it can't be pulled past the front edge of the table. Use an anti-kickback device during rip cut operations.

Sealing Materials

There will be times when you'll have to use hot asphalt for sealing foundations, waterproofing pilings, preventing dry rot in posts, and waterproofing the back sides of retaining walls. You may want to subcontract this work. If you don't, you'll need to know the rules for handling heated kettles, tankers, and carry buckets:

1. Keep a class BC fire extinguisher near each heated kettle. The larger the kettle, the larger the extinguisher should be. Up to 150 gallons, use an 8-pound extinguisher; over 150 to 350 gallons, use a 16-pound extinguisher; have a 20-pound extinguisher for anything larger.
2. Buckets used to carry the hot asphalt have to be at least 24 gauge steel. The maximum size is six gallons.
3. You can't fill carry buckets any higher than 4 inches from the top. Anything else used for carrying hot asphalt can't be filled more than 75 percent full.

4. Don't take filled carry buckets up ladders.
5. Heated kettles or tankers shouldn't be filled higher than 5 inches from the top surface when moved over a public street.
6. When the kettle is in use, someone has to be within 100 feet at all times.
7. The LPG (liquefied petroleum gas) used for heating must be kept far enough away from the flame and heat to prevent a temperature rise of more than 10 degrees F to the cylinder. You measure the temperature rise over a one-hour period with the burner at full blast.
8. Check the *flash point* of the asphalt. The flash point is the lowest temperature at which asphalt produces sufficient vapor to form an ignitable mixture in the presence of an open flame. Most asphalts have a flash point ranging from 473 to 500 degrees F.

Compressed Gas Storage

Gas cylinders that hold LPG, oxygen or acetylene are pressurized to several thousand psi. If you drop one and the valve breaks, the cylinder will take off like a rocket. When you transport gas cylinders, take off the gauges and install safety caps tightly.

If you use gas cylinders regularly, build a cylinder rack on your truck. Lock cylinders securely in the rack before transporting them. Never use a rope or chain sling for lifting a gas cylinder — instead, use nets, boxes, or hoists designed for cylinders.

"If you use gas cylinders regularly, build a cylinder rack on your truck. Lock cylinders securely in the rack before transporting them."

Don't store gas cylinders where they can contact electricity or electrical circuits. Keep oxygen separate from flammable gases. The distance from oxygen to a flammable gas in storage should be at least 20 feet. If this isn't possible, having a one-half hour fire-rated 5-foot-high wall between the materials will usually meet code.

Oxygen tanks are usually painted green or orange. Acetylene and other flammables are usually red. The hoses should also correspond to this color

coding. You can't connect hoses with fittings that will allow them to be pulled straight out. The fastener should be a twist-off type you loosen with a wrench. The valves used to dispense the gases should be designed and marked for the type of gas being used.

Welding Equipment

Rules for arc welding equipment are simple:

- Keep cables in good repair and use holders designed for the welder and rod being used.
- Cables may not contain any splices closer than 10 feet to the electrode holders on arc welding equipment.
- Keep a 6-pound BC fire extinguisher in the work area and remove any items that may catch fire.
- Use eye protection screens between the welders and other personnel. This prevents eye damage from U/V rays to those who aren't wearing a welder's mask.

Now you know about OSHA rules, and many of the things that might be covered on a contractor's license exam. In the rest of this chapter, we'll discuss basic common sense safety tips. You may not read anything here you don't already know — but reviewing the basics may prevent an accident.

Clothing and Personal Protection

If you're not dressed correctly for the job, you can, at the least, be very uncomfortable. And at the worst, you could end up injured — sometimes severely — or dead. Make sure your workers (and you) have all the safety equipment you need, and that you all use it. This includes appropriate work clothes.

Work Shoes

Sneakers and tennis shoes are fun to wear. They're comfortable, lightweight, washable, and cheap. They're also dangerous for construction workers. There's no protection against anything you drop on your foot. If you step on a nail, it will penetrate right to the bone. If you kick something, you'll feel it, and maybe get a broken toe.

Wear good-quality boots or shoes made of heavy leather with steel inserts in the toes. They're not cheap, but they can save you hundreds in doctor bills and lost work.

Shirts and Pants

A tee shirt and a pair of shorts are great for lounging around the house. But they have no place on a fence job. Wear full-length heavy canvas or denim pants to prevent scratches, scrapes, sunburn, and bug bites. A long-sleeved flannel shirt or canvas jacket will do the same for your upper body.

Beware of ticks. They carry diseases, some of them very dangerous to humans, including Rocky Mountain Spotted Fever and Lyme Disease. If you're working in areas where ticks are a problem, put rubber bands around your sleeves and pants cuffs to help prevent the ticks from reaching bare skin. Use insect repellent, and check for bites at the end of the day. To remove a tick, use tweezers to grasp the tick's head and pull it straight out. Don't twist or squeeze the abdomen, since this will cause the tick to regurgitate its stomach contents into the wound. It's not a bad idea to preserve the dead tick in a jar of alcohol to preserve it for future identification.

Safety Helmets (Hard Hats)

A safety helmet is a blessing when something falls on your head. I know it's hot, gets in the way, and 99 percent of the time you don't need it. But that one percent can kill or cripple you for life. If you're thinking of working on government contracts, then you better get used to wearing a safety helmet. It's almost always required.

Safety Glasses

As a fence contractor, you'll be swinging a pick, hammering nails, and doing a dozen other things hazardous to your eyes. Your eyes are your window to the world. Wear safety glasses or goggles when you do any work that can send things flying.

Safety Belts

When you're working on a steep hillside, use a rope or safety belt. Falls are the most common accidents on a construction site; they often end with broken bones.

Ear Protection

The power tools you'll use on the job generate intense noise. If you listen to that noise day in and day out, you'll eventually suffer hearing loss. Loud sounds over long periods of time can also result in brain damage and loss of balance. Some OSHA regulations require ear protection if noise levels exceed 90 decibels.

Open Fields — Farms and Ranches

When you're working in open fields, especially in the Northeast, wear bright orange clothing. Hunting season for groundhogs is all summer long. *You* may not think you look like a groundhog, but eager hunters don't always look that carefully.

Vehicle Traffic

Working adjacent to busy highways can be dangerous. *Never* assume that an oncoming car or truck knows you're there. Wear a bright orange or yellow vest and hat when you're working near roads and highways. Post signs warning that a work crew is present. Instruct your crew members to stay off the highway and shoulder whenever possible.

Slips, Falls and Broken Bones

As I said, falls are the most common cause of injury on a construction site. Wear shoes that give you a firm grip and plenty of support. Wet surfaces are especially dangerous.

Fire

Whether you're working in town, or in a rural area, always be careful that you don't start a fire:

- If you're a smoker, *field strip* your cigarettes when you put them out. That means tear the burning section off the filter or non-burning section.
- If you're welding, make sure there's at least a 5-foot clear space around your work area.
- Use motor-driven machinery only when they have approved spark arresters. Keep mufflers away from dry grasses or bushes.

You may have never seen or been in a brush or forest fire. They travel fast and destroy everything in their path. Don't *you* be responsible for starting one. Always carry a fire extinguisher with you. Many localities have passed laws making anyone who starts a fire, by accident or not, responsible for all costs involved. It can cost hundreds of thousands of dollars — or more — to bring a fire under control. Your company can't afford that.

Shock

If someone is injured on the job, he may go into shock. Get the injured person to lie down with his feet elevated higher than his head. Cover him to keep him warm. Within a few minutes his head will clear, the facial sweat will start to go away, and the blood pressure will return to normal. If you suspect injury to the back or spine, *don't* move him. Bring medical help to the injured person. It's a good idea to pay for foremen to attend a CPR course as well as a first aid course.

Stretching Wire

When you string wire mesh or barbed wire, you use a stretcher to tension the wire properly. A stretcher is a ratchet-type tool which exerts great pulling power on the wire. *Don't* over-tension the wire. It can break. When it does, it recoils with great force.

Most wire fencing manufactured today has *tension loops*. These are U- or S-shaped bends along the wire. Pull these only to about one-half their full extension; don't pull them completely straight. *Never* use a tractor or other vehicle in place of the ratchet stretcher. It's too easy to over-tension and break the wire.

Chemically-Treated Lumber

The primary chemical used to treat lumber for resistance to decay, dry rot, termites and other insects is chromated copper arsenate (CCA). Casual contact with the treated lumber poses no health problem, but continual contact may. Wear gloves when you work with treated lumber. Here are some other safety tips on treated lumber:

1. Don't use scraps for firewood. The smoke will release the chemicals into the air and coat everything it touches. Arsenate (arsenic) can be absorbed into your body through your skin and even reach lethal concentrations.
2. Don't use wood shavings or sawdust for animal litter or bedding. Don't use treated lumber for dog houses, pet runs, beehives, or animal containment where there's a chance of the lumber being chewed on.
3. Don't use treated lumber where it will come into contact with human or animal food, or potable water.

4. Wash thoroughly after working with treated lumber, especially before you eat. Wash work clothes separately from other clothing.
5. Wear a dust mask when you cut treated lumber; don't breath the sawdust.
6. Dispose of treated lumber in approved trash disposal areas. Your local sanitation department will have some recommendations.

A Drug-Free Work Force

Drugs and alcohol can cause workers to have accidents, as well as reduce productivity. Establish a company policy that prohibits the use of alcohol or drugs on the jobsite. I also recommend random drug testing of personnel to head off the use of chemical drugs that are often difficult to detect. Many insurance companies will give a discount on premiums for companies that have a drug-testing policy and, thus, a drug-free work force.

Now that you know how to take care of yourself in the field, let's get back to the office. In the next chapter, I'll tell you about estimating.

This page left intentionally blank

Chapter 15

Estimating

ESTIMATING IS TRULY AN art as well as a profession. Not only do you have to determine how much and what kind of materials you'll need — and their costs — but how long the job will take. Then, once you have those figures, you'll have to calculate and add in the labor cost. You'll also have to anticipate and plan for any problems unique to the project that would increase the amount of your estimate.

This chapter will help you on your way to becoming a skilled estimator. You'll improve your abilities and learn how to estimate projects faster than before. You'll learn to take into account all the scenarios you must consider to plan and price a job successfully. Every job you do will be different from rest, but I'll show you how to approach each one, and tell you what to watch out for. These are guidelines that thousands of other contractors have learned the hard way — with their pocketbooks (and I'm one of them).

Here's some good advice: While estimating, don't try to be so accurate that you're taking off every nail in the fence. Your time would be better spent selling and bidding other jobs, scheduling, stocking supplies, or solving everyday problems.

The Seven Rules of Good Estimating

1. Understand your product. If you've read this book from the beginning, you already have a good start.
2. Know how much money you need to earn, and what it will take to make it. Chapters 11 through 13 should help you there.

3. Plan each job carefully and thoroughly. Don't take shortcuts when you lay out a job.
4. Know what things cost *now*. Keep your cost records and price lists up to date.
5. Account for all your time.
6. Don't overlook the indirect costs of doing business. Every job must cover licenses, insurance, buildings and equipment, credit costs and taxes.
7. Remember, you're in business to make a profit and earn a good living.

Follow these rules, and estimating won't be a problem for you. The last rule is the most important one, so let's start with that.

Know Why You're In Business

Most rich people didn't get that way by accident. Even the ones who inherit their wealth won't keep it long if they don't plan carefully and use their resources wisely. That's what construction estimating is all about. You have to plan every job so you make the most efficient use of your time, your materials, and your employees. You have to know which materials are best for the job, and where to get them at the lowest price. Once you know where to get the best materials, build a reputation for using the best quality for the price your customers can afford. If you run your business so you just barely squeak by, you won't be inspired to do your best, and your customers will recognize that. Base everything you do on the idea that yours is a classy and profitable operation, and it will be.

Know Your Product and Its Value

Do your homework and, if possible, find out what your competition charges for the same kind of work you do. If you're not careful, one of two things could happen:

1. You'll underprice your work, and not make enough profit.
2. Your estimates will be too high, and you won't get the jobs.

A good option is the *National Construction Estimator*, a book that contains up-to-date material and labor prices. There's an order form in the back of this book.

If you're getting one out of every three jobs you bid on, your prices are probably competitive. Less than one in three, and your prices may be too high.

If you get *every* job you go for, it's almost certain you're not charging enough, unless you've found a magical way to squeeze more profit out of your jobs than any of your competitors.

Do some research and keep up with the latest design trends, materials and equipment. Send for catalogs. Read building trade magazines and do searches on the Internet. Go to your local library and builder supply stores and look for books on design and construction. Builder supply stores are a great source of information.

How Much Do You Need to Earn?

If you haven't already done it, go back to Chapter 12 and do the budget projections for yourself and your business. Make sure they're realistic and don't leave anything out. Those projections will tell you how much to mark up your prices so that you make a profit and earn a good living.

Remember to cover costs to run your office, pay utilities, telephone, insurance, and taxes. You also have to figure the expendable tool prices and incidental materials that are consumed during construction. It's easy to overlook things like saw blades, drill bits, screw anchors, and the small tools that get lost or broken, like screwdrivers and tape measures. They don't cost a lot individually, but they can add up to a bundle over time. Some contractors make allowances for wear and tear, as well as lost or stolen tools, in the company overhead or as a small percentage of each job cost.

If you're just starting your business, don't be like the poor fellow in this old saying: "You can tell which new guy's not going to last too long. He's the one who bought the fancy pickup with all the trimmings when he started his business." Here's the point: The first impression counts, but don't go overboard. Don't buy that new truck right away; don't "fancy" up your office right away. If most of your sales are made face-to-face, use a card table to support your computer instead of a table costing hundreds of dollars. You can always make these upgrades when you have the money.

Plan Your Jobs Carefully

Refer back to Chapter 2 for details about how to lay out your project. Mentally go through the steps you'll take to complete the job, and be sure you've accounted for every item of material and every operation you'll do. Don't forget rental costs for any special equipment you may need, such as a backhoe, airless sprayer, or post hole power auger. And don't forget to include sales tax if you have to pay it on materials or rentals, or if you're required to collect it from your customer.

Even if you own your equipment, consider using rental charges in your bids. After all, you paid for this equipment, and you'll have to replace it when it wears out. If you charge rental rates, you can build a replacement fund for the time when you need it.

Job or bid #	Estimate date	Customer
Prepared by	Reviewed by	Address
Calendar date		

Daily Milestone Planning Chart

OPERATION	1	2	3	4	5	6	7	8	9	10	11	12	13	14	15	16	17	18

Figure 15-1
Chart your jobs

Scheduling

An important part of estimating — and making a profit — is scheduling, because once you land the contract, you have to make it fit into your existing workload. And you have to be flexible enough to make use of spare hours that become available. If your transit-mix cement truck is going to be three hours late, and you know about it, you and your crew could spend the time on another job nearby.

Even if the truck arrives on time, you'll still have to wait several days for the concrete to cure before you can get on with the next step … especially when you're dealing with waiting time setting fence posts. You need to have another project that you can work on. This is where precise scheduling means the difference between loss, break even or profit.

Use a form like the milestone chart in Figure 15-1 to plan your jobs. This is your master schedule for each job. It's a quick reference that shows when each step of the job must take place. Only include weekends and holidays as part of

Inspections generally occur after these events:

1. excavation
2. installation of foundation rebar
3. pouring of the footings or foundation
4. completion of a wall or fence
5. backfilling

the project if they fall during waiting periods, such as curing time. You can see an example of how to use this form later in the chapter, in Figure 15-12.

Inspections

Inspections can throw a monkey wrench into your plans. They can delay you anywhere from a few hours to several days. Be sure to allow for them in your schedules.

Special inspections may be required if you install electrical wiring, fixtures or plumbing. Each inspection will probably take up at least an hour of your time, and inspectors rarely show up exactly when you expect them. There can be a delay of several days before you can proceed with your work.

Then there's always that rotten day when something doesn't pass inspection, and you have to rework it or do it over.

Always call the building inspector's office in advance to schedule inspections. Ask them what kind of lead time they need. And then be sure you have the work done on time so you're ready.

Know What Things Cost

I'm not going to give you a price list for all the materials you might expect to use in your fence contracting business. There are a couple reasons for that:

1. By the time you read this, prices printed here could be a few years old.
2. Prices vary greatly from place to place. For instance, lumber is generally cheaper in the New York area than it is in Los Angeles, while equipment rentals are much less in L.A. than on the east coast.

The only prices that would be of any value to you are the ones in your location. You have to get those yourself. Talk to your local suppliers, get their current prices, find out about their credit and delivery terms. There's also an order form at the back of this book featuring a wide selection of Craftsman's most popular costbooks, that include material prices. Alternatively, you can sign up for the *National Estimator Cloud* at https://craftsman-book.com/national-estimator-cloud. No Disk and no download needed. You can access all 10 Craftsman's estimating costbooks for one low monthly cost.

Use a spreadsheet to compare prices from different suppliers. List the items you're pricing in the left-hand column and the suppliers across the top row. Then you can see at a glance where you'll get the best deal for any given item.

Update your price list continually to adjust for inflation, fluctuations in supply and demand, and manufacturers' or suppliers' price changes. Keep a file of new products and their prices. Pick up information from suppliers, decorating centers, lumberyards, home improvement magazines and the Internet. I fill out the reader's service cards in the magazines and send for anything that will help me do a better job or save money. If you have a business license, you can request suggested retail price lists from the manufacturers.

Whenever I buy materials for jobs, I update my price logs. On items I use often, I keep running listings so I can anticipate price increases. Also, every month, ask your supplies to fax you their latest prices for the items you normally purchase.

Materials

Once you've finished your take-off sheet for materials and added the prices, put on an additional 5 percent to cover waste, damaged goods, defective goods, and mistakes. You could also include a place on your take-off form to list charges for special orders and deliveries.

Try to use materials that are commonly available in your area. You won't have to wait for delivery, and they'll be cheaper. If everyone in town is using cypress instead of redwood, concrete block instead of brick, and chain link instead of wrought iron, there's probably a good reason.

Lumber

You won't usually have problems with the quality of metal, brick or block. But lumber is something else again. You have to know what you're buying. Expect the cost of lumber to increase substantially for each increase in grade.

A few words about variations in quality: On the west coast, even #1 structural lumber isn't always that great looking. East coast lumber of the same grade is generally better quality and appearance. Also, if you want to use KD lumber, expect to pay the price. It runs several times higher than the cost of S-GRN … if you can get it at all. Inexpensive redwood 2 x 4s may be cut from the white wood or outer portions of the redwood tree. Don't use this lumber where it will contact the ground. Pay the extra price for heartwood to get the full benefits of redwood.

Visit your local lumberyard, or several lumberyards, and ask for a quote on several thousand dollars worth of lumber. Ask for prices on a variety of items you expect to use. Use this list to start your own price book, and update your prices as needed.

You'll be tempted by flyers in the mail advertising, "Special, 4 x 4 redwood posts 8 feet long." Watch out. They're probably lacking in straightness, smoothness, and structural strength. Use that stuff if you want, but I'll bet you get complaints from your customers — and this will hurt your reputation as well as future business.

Will you cut materials on the jobsite, or order them cut by the mill or supplier? Most yards will cut your materials to size for a nominal fee if you give them enough time. The per-cut cost may sound like a lot, but consider this: Do you have saws that can cut a 4 x 4 in one cut? Most circular saws can't. You have to make at least two cuts and you rarely get a straight edge. So why fool with poorly cut, poorly fitting lumber? Let the yard cut it.

Stone

Stone suppliers will cut stone to order. You may get lucky and find one who will number the pieces and give you a layout drawing showing which piece goes where. And some stone veneer suppliers may score the edges so you can use metal hangers. Yes, this all costs extra, but the time and sweat you save in the field should be worth it. In any case, don't forget to include special cutting or handling charges in your estimate.

Hardware

When you build fences or walls, you'll need various kinds of hardware — hinges, latches, lock sets, closers, screws, bolts, nails, and so on. If you're just starting out in your business, then I suggest you buy just what you need for each job.

As you get established, you'll find yourself with a collection of hardware left over from earlier jobs when you had to buy more than you needed, or when you just flat-out bought too many. Try keeping them in zip-loc plastic bags, and put a note in the bag identifying it and its price. If you have a computer you can keep an up-to-date list of all these odds and ends. Sooner or later you'll find a use for them. If you have the money, time and storage space, build or buy storage bins and label each bin, showing the type of item stored in it. This would be a good rainy day project for your fence crew.

You may find that you're using some items more than others; consider buying these in bulk. For example, if you do a lot of redwood fence work, you'll be using a lot of aluminum nails, aluminum decking screws and brass screws. They're expensive, about two to four times as much as the same things in steel. Let's say you plan to buy a box of 100 aluminum decking screws, but you *could* get a box of 500. And, the larger the package, the less it should cost. But don't go overboard. If you don't expect to use those 500 decking screws within a month or two, don't buy in bulk.

Here's a little trick. If you buy 25 pounds of nails in bulk, you may get the bulk price less 15 percent. If you expect to need them soon, order an extra 25 pounds of nails. On an order this large, you should be able to get a discount of up to 22 percent; so you can save 7 percent on those extra nails you'll need soon anyway.

But first, consider the cost of storage and possible loss when buying in bulk. Do you have a good storage place? Leave 25 pounds of steel nails sitting out in

the rain and you'll have 25 pounds of rust. Do you have employees? Leave a box of 3-inch brass hinges sitting around and you may find you're short a few. It's a shame, but companies lose countless millions to "honest" employees who feel that pilferage is justified as part of their compensation for working.

Markup on hardware is about 32 to 44 percent at the local lumberyard. If you're a good customer, you should already be getting a 10 to 15 percent discount. If you're not, arm yourself with past purchase receipts so you can show the manager what a good customer you really are. Ask for the discount you deserve. After all, they're not about to voluntarily give you part of their profits.

Ask about minimum price break schedules. Ask about purchasing in bulk. Ask about substitute items that may be as good or better, but less expensive than what you're currently buying. Find out about terms. Also, some suppliers allow a small discount on what's owed, provided the bill is paid on time.

Foundations and Concrete

Here again, if you can use it and if you have the storage space, buy in bulk. Bagged concrete weighs 94 pounds a bag. If you have a half-ton pickup truck, you can only carry eleven bags at a time. Most contractors have concrete delivered, and most yards can deliver 54 bags at a time; so why spend the time and fuel to make your own deliveries if you don't have to?

I assume that you're using bagged concrete a little at a time. If you're pouring a 5-cubic-yard foundation, it doesn't make sense to mix your own and spend some 40 hours of mixing and pouring time. You can buy the same 5 yards as ready-mix and pour it in less than an hour. Here's my rule of thumb: For setting fence posts, use bagged concrete. For foundations or concrete retaining walls, use ready-mix.

"If you're pouring a 5-cubic-yard foundation, it doesn't make sense to mix your own and spend some 40 hours of mixing and pouring time. "

Formed foundations look better and use less concrete, but you might consider just pouring into an open trench, especially under a non-structural fence or wall. That saves labor, since you don't have to fabricate and strip forms. It saves material since you don't need form lumber, but it will increase the concrete cost. You can reuse form lumber many times as forms, but I wouldn't try to use it for anything else. The release oils and concrete prevent paint from sticking to the wood forms.

For most foundation work, I just pour concrete into the trench, filling it wall to wall. It will require more concrete, but I eliminate several hours of extra labor. One way to determine the additional concrete is to figure the footing to be at least 4 inches wider than it would be had you used forms. You can reduce concrete waste in any footing if you level the bottom of the trench with sand, which is much cheaper than concrete.

Finishing

Paint and stain present some variables that complicate estimating. Prices may differ from store to store for the same product made by the same manufacturer. Assume you can purchase a paint product for a few dollars less at a hardware store; but you're already at the lumberyard getting the rest of your materials. Is it worth a trip to the hardware store?

If you only need one gallon, just pick it up at the lumberyard and save that trip. It will cost you less, especially with current gas prices. If you're buying quantities of paint, the drive to the hardware store and the wait in line will probably be worth your time; so go to the hardware store. But if you have a crew on the job waiting for you to arrive with the material, buy it and get back to the site as soon as possible. You can see you have a lot of options.

Stocking Field Vehicles

As you do a quantity takeoff for a job, use the material list you compiled to stock the needed supplies in the field vehicles. Add some for waste and errors. A bolt worth less than a dollar could end up costing tens of dollars if you or an employee has to make a trip to the hardware store, locate the item, stand in line to pay, and return to the jobsite with the one "little" item necessary to finish the job.

Weather Considerations

Practically all areas in the U.S. have some frost. The code requires you to dig your post holes and footings at least 12 inches below the published frost level in your area. In southern California the frost level is about 3 inches in most areas, so your excavation has to be at least 15 inches deep. Suppliers of fence posts stock 8-foot posts. That allows for fence heights up to 6 feet 9 inches.

But what if you contract for a job in the mountains where the frost level is 36 inches? Now you have to sink your 8-foot post 4 feet into the ground — which only leaves you 4 feet above ground. If you want to build a 6-foot fence, you'll need to order 10-foot posts. That might require a special order, and at a premium price. It will also cost you more for excavation.

Excavation Headaches

Extensive excavation increases the chance that you'll hit some kind of underground obstacle, like a water, gas, sewer or underground phone line, or maybe water. I mention all this just so you'll be aware that you have to think about all possible consequences when you prepare your estimates. Always call before you dig! Replacing a fiber optics line could put you out of business.

Labor Costs

When you estimate labor costs, you'll have more variables than you had with the materials. Can you use a nail gun or stapler to build a fence? Or will you nail it together by hand? Will you have to use screws or bolts for certain procedures? If so, can you drive screws directly, or will you have to drill pilot holes? It takes twice as long to nail than to staple, and four to six times longer to install bolts and screws.

There are also variations in coating time. An eight-hour brush job will take four hours with a roller and one hour with a sprayer. But on a windy day, you'll probably be forced to use a roller. Now, if you bid the job assuming you'd be using a sprayer, you'd be in trouble. Make sure your estimate reflects the time it will take for the operation you'll have to do.

You can set your own labor rate according to the projections you made at the beginning of the chapter, but what about the people you'll hire? I'll try to give you some guidelines on what to pay employees and subcontractors.

- Hang out where the contractors in your area gather to talk. Pick up as much as you can about local rates and hiring practices.
- Read your local newspaper want ads. Many of the employment ads list salaries. If they don't, call the advertisers and ask what they're paying.
- Supervisors earn 20 to 25 percent more than the most experienced person they supervise.
- Check with your local department of employment. They generally have lists of local wage rates. The U.S. government also publishes wage rate tables for most jobs. The Internet is a great source for labor rates.
- Use common sense. Pay good people well and treat them with respect. Sure, you can find desperate people who'll work for poor pay, but if they can't live on the wages you're paying them, how long will they stay? Remember that you've spent time and money entering them on the payroll and training them. Will they steal from you to supplement that pay? And will they be loyal to you and really do a full day's work? I doubt it.

- Hiring on a piecework basis may be your best bet. Hire people to do certain repetitive operations for a set price per operation or piece. The key to success here is to specify up front just what you expect.

Always try for the lowest rates for the most experienced workers you can find. That's just good business sense. But be fair. Put yourself in their shoes. Would you do the job for the wage you're offering? Would you like to work for you? Could you live on what you're paying?

Subcontractors

You know *your* overhead and salary requirements. Assume that your subcontractors have similar costs. Start out by asking the subs what they charge. Then negotiate.

Find out what's the least they'll accept. Ask if they have lower long-term rates or multiple contract rates. Ask about their benefit costs, working hours, quality standards, schedules, and warrantees. Agree on penalties for nonperformance, who supplies what, who is responsible for what, and your payment schedule.

Legal and Administrative Costs

Be sure to include permit fees in your estimates. Fees in many areas have a minimum charge, plus a charge for each thousand dollars of the total contract.

Don't try to avoid *any* permit requirements. You may unknowingly overlook some local restrictions on the kind of material or hardware you plan to use. This is especially true if you're installing electrical or plumbing fixtures on a wall or fence. If you do something that's not to code and it's discovered later, you could be in trouble.

Account for All Your Time

Build into your estimates all the time it takes for things that aren't actually part of the construction process. That includes time to sell the job, design the job, prepare estimates, pull permits, order and pick up materials, and travel time to and from the job.

Designing, estimating, and selling even a small a job can take from one to three hours. And you could stand in line for an hour or two at City Hall to get your permits, too. Include a minimum of five hours in your estimates for these functions.

Sales calls	Minimum time		Typical time	
	Hours	Minutes	Hours	Minutes
Take inquiry call	.2	12	.1	6
Travel time	.5	30	.5	30
Interview customer	.3	18	.2	12
Walk fence line, take notes	.8	48	.7	42
Travel time	—	—	.5	30
Draw plans	—	—	3.5	210
Write up estimate	1.5	90	1.5	90
Arrange sales appointment	—	—	.2	12
Travel time	—	—	.5	30
Make presentation	.5	30	.5	30
Close sale	.5	30	.5	30
Collect contract, deposit	.2	12	.2	12
Travel time	.5	30	.5	30
TOTALS	**5.0**	**300**	**9.4**	**564**

Job planning	Minimum time		Typical time*	
	Hours	Minutes	Hours	Minutes
Review job notes	.2	12	.2	12
Review materials list	1.5	90	1.5	90
Review manhour requirements	1.2	72	1.2	72
Make up schedule	1.5	90	1.5	90
Order materials	2.5	150	2.5	150
Schedule outside help	.5	30	.5	30
Schedule inside help	.5	30	.5	30
Inform customer of start date	.1	6	.1	6
Draw formal plans	2.5	150	2.5	150
Pull permits	2.5	150	4.8	288
TOTALS	**13.0**	**780**	**15.3**	**918**
*Typical time for job planning includes extra trip for permits				

Figure 15-2
Times for sales calls and job planning

Now, figure from one to eight hours to order materials and see that they get where they belong when they're needed. Counter people and warehouse workers or delivery drivers aren't very concerned about your schedule. You have to allow for the time it takes to receive the load, count it, and haul it to the jobsite. You should also allow some time to go after missing, damaged, or forgotten items. There's always something — no job planning or estimating system is entirely foolproof.

Figure 15-2 shows minimum and typical times for selling and planning a job. When I estimate, I like to keep track of these hours to help me budget

my time. But for the final estimate I build the cost of these operations into my overhead figure and markup. You can account for these jobs separately or as an overhead item, whichever is easier for you.

Be aware there's a risk here, though. Your competition might not know that it takes 18 hours to sell and plan a job, and they won't include the cost in their bid, so they might very well underbid you. But it's better to lose a bid than to win one that will come in at a loss. As you see, you can spend as much as 18 to 30 hours on a job before you even get started.

Expect the Unexpected

It's hard, when you first inspect a jobsite, to know what you might run into once a job gets going. Check for anything that might cause problems along the wall or fence line. Trees, brush, old walls, large rocks, streams, abandoned vehicles, or hills and valleys can all be obstructions. Determine and state in your contract *who is responsible for removing or compensating for these things.* If it's you, allow for any special equipment you'll need. Estimate how long it will take, and how much to charge per hour.

Underground Obstructions

Underground obstructions are hard to account for. There may be streams, rocks, tree roots, buried construction materials (or even dead animals), phone lines, power lines, water or sprinkler lines or gas lines. Just figure you'll probably hit something somewhere along the path. A metal detector can help you find some of these items, but always call the utility companies anyway. They can tell you where their lines are.

Keep in mind that most utility companies require a 24- to 48-hour notice before you dig. It's a good idea to call them even if the plans show existing utilities, because the plans won't always be exactly right. Once you've located a utility, mark its location with surveyor ties. Each utility type should receive a different paint color: red for electrical power lines, cables, conduit and lighting cable; yellow for gas, oil steam, petroleum or chemical lines; orange for communication, alarm and signal lines and cable TV lines; blue for water and irrigation lines; green for sewer and drainage lines.

Tree Roots and Groundcover

You'll need a special tool to cut tree roots. You can use a branch trimmer or nubbers for small ones less than an inch in diameter. For high grasses you'll need a tractor-mounted mower.

You can have the owner clear the land, or you could hire a local farmer as a subcontractor to do it. Or you can do it yourself and charge accordingly.

In areas where there's a high danger of fire, it's almost mandatory to cut fire breaks, especially along roads. Since you have to clear the land anyway, why not plow it? Use fire prevention as a selling point.

Trees

You can do one of two things with a tree: Either end the fence on one side of the tree and restart it again on the other (and leave space for the tree to grow), or cut down the tree. In the first case, you'll need an extra fence post, and associated hardware. And keep in mind that, in some states, there are environmental issues when cutting down a tree.

You'll definitely need a chain saw to cut down a tree if it's any size at all. You'll also have to dispose of the tree. The owner may want to keep the larger pieces for firewood, but you'll probably have to rent a dumpster for the small stuff. If there aren't too many small branches, you can cut them and tie them into bundles for the local trash pickup; check with the disposal company for their requirements. In some areas, you'll need to clear an area 10 feet wide down the fence line. Stumps cut to ground level don't have to be removed unless the ground slope changes abruptly and the stump prohibits you from properly setting the fence to grade.

"Taking down a good-sized tree is dangerous and no job for an amateur."

Here's what I do: I cut and charge for small trees under 4 inches in diameter. I'm just careful that I don't crash one through someone's window. I use the trunk for firewood. But I make larger trees the responsibility of the owner, and suggest he hire a professional tree removal service. Taking down a good-sized tree is dangerous and no job for an amateur. If you decide to remove a tree yourself, check with your insurance company regarding the cost of liability and workers' comp insurance. Tree service companies have a relatively high accident rate, so the insurance is higher than that of a fence builder.

Rocks

If you have to remove large rocks, you'll probably need a backhoe or bulldozer, and trucks to haul the rock off site. That can cost a lot of money and you'll probably need to hire licensed operators.

Buried Concrete

When you expect to dig post holes near an existing slab or building, test the ground before you prepare your bid. Many times a foundation footing extends several inches beyond what shows at ground level. It's really hard to dig when you hit concrete. Test for this by driving a metal rod into the ground where you plan to dig. Test at the perimeter of the planned hole or trench, not the center.

Plain Ol' Bad Days

There's a saying (a variation on Murphy's Law): "If anything can go wrong, it will, and at the worst possible moment." Consider this: You had 36 bags of post hole cement delivered to a jobsite. The driver dropped the load on the customer's driveway, and four bags broke and spilled all over the place. Not only did you lose the cement, but you had a mess to clean up. You tested some of the cement in a small area of the job, and it was fine. Later, it turned out that some of it was mortar mix in a mislabeled bag that turned to dust the day after you poured it.

You had to spend several hours convincing the supplier to take the cement back. Then you had to attend to the pick up and replacement, and finally, test the new batch. In a case like this, you either have to eat the cost, sue the manufacturer or allow some wiggle room in your estimates for contingencies like this. It depends on how hungry you are.

Mother Nature

Weather delays can add considerably to a job — and I'm not just talking about rain and snow. In many places around the country, it gets hot. A job that should take five days will sometimes take ten because production really drops off in 105-degree heat. People just can't work as many hours each day. It's going to cost you extra travel time and expense, and also more time wasted while you set up and tear down each day. Keep in mind that if you're renting equipment, you are obligated to pay for it each day you have it, even if you're rained or "heated" out and the tool isn't being used.

… and Other Things

You or a crew member is sick on Friday. The bug is gone by Monday, but by then it's raining. Tuesday the water pump breaks on your truck. And Wednesday the nail gun self-destructs. And on and on it goes. Sometimes you'll get hijacked no matter how accurately you estimate a job.

New and Unusual Jobs

On a job you've never tackled before, you may be at a loss when it comes to estimating the cost. I recommend you dig through your files to see if you can find an old job that resembles the new one. For example, if the new job requires metal railings between brick pilasters, you can look up your most recent jobs for a metal railing and a brick wall. Use the two old jobs to give you some idea of the cost. Then add 20 percent to the labor costs for the unknown.

Until you have good job records to rely on, you can use my manhour tables at the end of this chapter. Each table includes a breakdown of the major steps required to do the job, and the total manhours the job will take.

Takeoff Format						
Description	**Total Quantity**	**Unit**	**Material Unit Price**	**Total Material Cost**	**Labor Unit Price**	**Total Labor Cost**
Item 1	400	LF	2.00	800.00	4.50	1,800.00
Item 2	14	Ea	9.50	133.00	12.25	172.00
Item 3	1,250	SF	0.75	938.00	2.14	2,675.00
Column Totals				**$1,871.00**		**$4,647.00**

Material (including sales tax)	= $1,871.00 × 1.07 =	$2,002.00	*NOTES:*
Labor (including burden)	= $4,647.00 × 1.20 =	$5,576.00	
Subcontracts (painter)	=	$ 750.00	
Subtotal		$8,328.00	
Office overhead (at 10%)	= $8,328.00 × 0.10 =	$ 833.00	
Subtotal		$9,161.00	
Profit (at 10%)	= $9,161.00 × 0.10 =	$ 916.00	
Total Bid		**$10,077.00**	

Takeoff Format

Can You Assign Unit Costs?

The *unit price* is a set price for an entire job component, including the material and labor costs. A takeoff format I've used for years is shown above. It's simple and a time-saver. You can use a seven-column pad for your work. These are the steps you go through to put a total bid together:

- In Column 1, give a description of the cost item.
- In Column 2, enter the total quantity of the cost item.
- In Column 3, put the unit of measurement (LF, Ea., SF, etc.).
- In Column 4, enter the material unit price for each unit ($/LF, $/Ea., etc.).
- In Column 5, enter the total material cost for the item (Total quantity × unit price). Round off the figures in this column to whole dollars.
- In Column 6, enter the labor unit price for each item.
- In Column 7, enter the total labor cost (Total quantity × labor unit price). Round off the figures in this column to whole dollars.

- Add up the costs in Column 5 to get a grand total material cost, then add sales tax.
- Add up the costs in Column 7 to get a grand total labor cost, then all labor burden. Subcontract bids (painter, electrician, plumber, etc.) are also added to the grand total material and labor costs.
- Get a grand total for the job, including subcontractors' bids and add overhead and profit.

Some of you might be asking, "Is it okay to apply profit to office overhead?" Yes: You have as much right to get profit for a secretary's pasting a stamp on an envelope as you do for a tradesman nailing up a fence board.

You can establish unit prices for posts, face boards, bricks, or any other item you use to build fences or walls. It will take time to calculate the unit price for every item you use, then add in the labor and overhead. But once you have the unit costs, it's quick and easy to use them to estimate the job cost.

Creating Assemblies

Another way to do this and save time is to create assemblies. The following example will demonstrate how to make assemblies. Assuming a 6-foot chain link fence with a 1½-inch swaged top rail and tension wire at the bottom of the fence, let's do a quantity takeoff for the fence shown in Figure 15-3. But before we start, a little preliminary work will save us a lot of time in the future, especially if you're in the fence building business and have to do many chain link fence takeoffs. What I'm talking about is called *systems estimating*. All this means is that we can take off many items in detail without having to take off each nut and bolt separately. For example, assuming that end posts are 8 inches in diameter and 36 inches deep, line posts are 8 inches in diameter and 24 inches deep and gate posts are 10 inches in diameter and 36 inches deep, each corner post includes the following items:

1 Ea. 2½" post	2 Ea. tension bars
8 Ea. tension bands	1 Ea. post cap
2 Ea. end rail bands	2 Ea. rail ends
4 Ea. wire ties	10 Ea. 5⁄16" x 1¼" carriage bolts

0.9 cubic feet of concrete
(See Figure 15-4 for concrete requirements when using round wood posts)

Each end post will have the same items except that we'll have only 1 tension bar, 4 tension bands, 1 end rail band, 5 5⁄16" x 1¼" carriage bolts and 1 end rail.

Each line post is comprised of the following:

1 Ea. 2" post	1 Ea. loop cap
4 Ea. wire ties	1.0 cubic feet of concrete

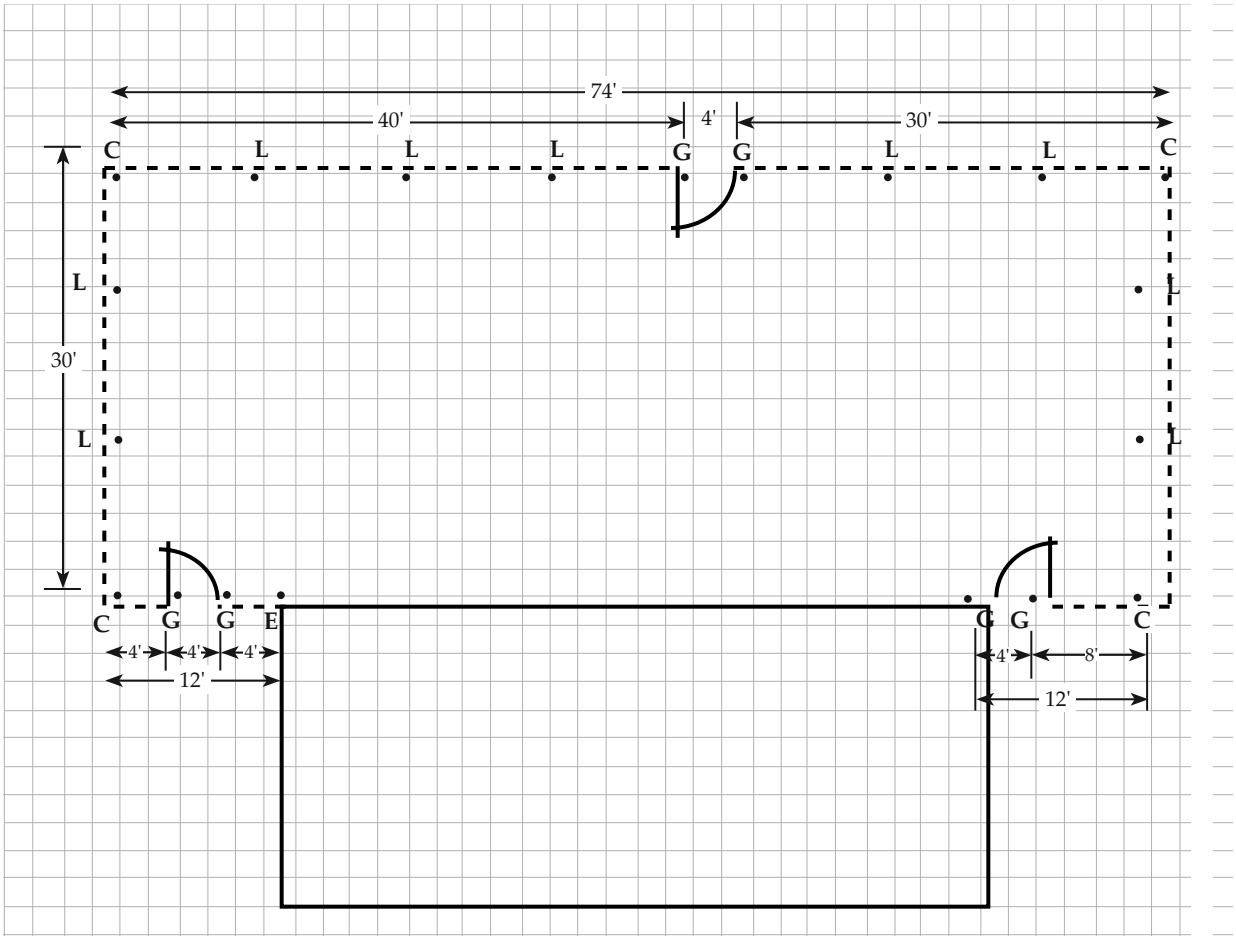

Figure 15-3
Chain link fence takeoff

Each 4' gate includes:

1 Ea. gate frame	1 Ea. gate latch
2 Ea. gate hinges	4 Ea. tension bars
8 Ea. tension bands	2 Ea. rail ends
2 Ea. end rail bands	4 Ea. 5/16" x 1¼" carriage bolts
2 Ea. ⅜" x 1¾" carriage bolts	2 Ea. ⅜" x 3" carriage bolts
2 Ea. ¼" x 1¼" carriage bolts	8 Ea. gate clips
6 Ea. wire ties	2 Ea. 2½" gate posts
2 Ea. 2½" post caps	3 cubic feet of concrete
4 feet of fence fabric	

Each linear foot of fence fabric includes:

1 LF of fabric	0.5 wire ties (assuming ties at 24-inches on center)
1 LF of tension wire	1 Ea. hog ring

Cubic feet of concrete required for round wood posts			
Post diameter	**Hole diameter**	**Hole depth**	**Cubic feet of concrete per hole**
1 1/2″	6″	24″	0.4
1 1/2″	6″	30″	0.5
1 1/2″	6″	36″	0.5
1 1/2″	8″	24″	0.7
1 1/2″	8″	30″	0.8
1 1/2″	8″	36″	1.0
1 1/2″	10″	24″	1.1
1 1/2″	10″	30″	1.3
1 1/2″	10″	36″	1.6
2″	6″	24″	0.3
2″	6″	30″	0.4
2″	6″	36″	0.5
2″	8″	24″	0.6
2″	8″	30″	0.8
2″	8″	36″	1.0
2″	10″	24″	1.0
2″	10″	30″	1.3
2″	10″	36″	1.5
2 1/2″	8″	24″	0.6
2 1/2″	8″	30″	0.8
2 1/2″	8″	36″	0.9
2 1/2″	10″	24″	1.0
2 1/2″	10″	30″	1.3
2 1/2″	10″	36″	1.5
2 1/2″	12″	24″	1.5
2 1/2″	12″	30″	1.9
2 1/2″	12″	36″	2.2

Cubic feet of concrete required for round wood posts, *continued*			
Post diameter	**Hole diameter**	**Hole depth**	**Cubic feet of concrete per hole**
4″	12″	30″	1.7
4″	12″	36″	2.1
4″	12″	42″	2.4
4″	12″	48″	2.8
4″	16″	30″	3.3
4″	16″	36″	3.9
4″	16″	42″	4.6
4″	16″	48″	5.2
4″	18″	30″	4.2
4″	18″	36″	5.0
4″	18″	42″	5.9
4″	18″	48″	6.7
6 1/2″	16″	36″	3.5
6 1/2″	16″	42″	4.0
6 1/2″	16″	48″	4.6
6 1/2″	18″	36″	4.6
6 1/2″	18″	42″	5.3
6 1/2″	18″	48″	6.1
6 1/2″	24″	36″	8.7
6 1/2″	24″	42″	10.2
6 1/2″	24″	48″	11.6
8 1/2″	16″	36″	3.0
8 1/2″	16″	42″	3.5
8 1/2″	16″	48″	4.0
8 1/2″	18″	36″	4.1
8 1/2″	18″	42″	4.8
8 1/2″	18″	48″	5.4
8 1/2″	24″	36″	8.2
8 1/2″	24″	42″	9.6
8 1/2″	24″	48″	10.8

Figure 15-4
Round post hole concrete requirements

Note: Taking off items like tie wire might seem too detailed to you because the cost comprises such a small percentage of the total material costs, but each wire tie takes time and so it's a labor expense.

Now we're ready to do the quantity takeoff. We have 4 corner posts, one end post, 9 line posts, 3 four-foot gates:

$(40' + 30' + 30' + 30' + 4' + 4' + 8') = 146$ linear feet of line fence fabric
$146 \div 20' = 7.3$, or 8 top rails (including waste)

Extending totals, we get the following quantities:

Corner posts:

2½" corner posts = 4 Ea.
Tension bars = 4 × 2 Ea. = 8 Ea.
2½" post caps = 4 Ea.
Wire ties = 4 × 4 Ea. = 16 Ea.
Rail ends = 4 × 2 Ea. = 8 Ea.
2,500 psi concrete = 4 × 0.9 cf = 3.6 cf
Tension bands = 4 × 8 Ea. = 32 Ea.
End rail bands = 4 × 2 Ea. = 8 Ea.
Carriage bolts = 4 × 10 Ea. = 40 Ea. (5/16" x 1¼")

End posts:

2½" end posts = 1 Ea.
Tension bars = 1 Ea.
2½" post caps = 1 Ea.
Rail ends = 1 Ea.
2,500 psi concrete = 1 × 0.9 cf = 1.8 cf
Tension bands = 4 Ea.
End rail bands = 1 Ea.
Carriage bolts = 5 Ea.

Line posts:

2" posts = 9 Ea.
2" loop caps = 9 Ea.
Concrete = 9 × 1.0 cf = 9 cubic feet
Wire ties = 9 × 4 Ea. = 36 Ea.

4-foot gates:

4' gate frames = 3 Ea.
Gate hinges = 3 × 4 Ea. = 12 Ea.
Tension bands = 3 × 8 Ea. = 24 Ea.
End rail bands = 3 × 2 Ea. = 6 Ea.
2½" posts = 3 × 2 Ea. = 6 Ea.
Concrete = 3 × 2 × 1.5 cf = 9.0 cubic feet
Wire ties = 3 × 6 Ea. = 18 Ea.
Carriage bolts = 3 × 2 Ea. = 6 Ea. (⅜" x 1¼")
Gate latches = 3 Ea.
Tension bars = 3 × 2 Ea. = 6 Ea.
Rail ends = 3 × 2 Ea. = 6 Ea.
Gate clips = 3 × 8 Ea. = 24 Ea.
2½" post caps = 3 × 2 Ea. = 6 Ea.
Fence fabric = 3 × 4' = 12 LF
Carriage bolts = 3 × 4 Ea. = 12 Ea. (5/16" x 1¼")
Carriage bolts = 3 × 2 Ea. = 6 Ea. (¼" x 1¼")

Fence fabric:

6' fabric = 146 LF

Tension wire = 146 LF

Wire ties = 146 × 0.5 Ea. = 73 Ea.

Hog rings = 146 Ea.

Top rail:

1½" top rail = 146 ÷ 20' = 7.3 = 8 Ea. (including waste)

Now, we can recap our material list. We can break down the quantities into sections, namely the frame, fabric and gates.

Frame:

2½" posts = 11 Ea.

2" posts = 9 Ea.

20' 1½" top rails = 8 Ea.

End rail bands = 15 Ea.

2½" post caps = 11 Ea.

2" loop caps = 9 Ea.

1½" rail ends = 15 Ea.

2,500 psi concrete = 23.4 cf = 1 CY

Fabric:

6-foot 11 ga. fabric = 158 LF

14 ga. tension bands = 60 Ea.

7 ga. tension wire = 146 LF

5/16" x 1¼" carriage bolts = 62 Ea.

3/16" x ¾" tension bars = 15 Ea.

9 ga. aluminum wire ties = 143 Ea.

12 ga. hog rings = 146 Ea.

Gates:

4' gate frames = 3 Ea.

Gate hinges = 6 Ea.

3/8" x 1¾" carriage bolts = 6 Ea.

¼" x 1¼" carriage bolts = 6 Ea.

Gate latches = 3 Ea.

Gate clips = 24 Ea.

3/8" x 3" carriage bolts = 6 Ea.

You'll also have some equipment expenses, whether you buy it or rent it. For example, you'll need a portable cement mixer, as well as a stretcher.

I realize there are some items on the list that aren't that expensive, but if you ever show up at a jobsite and forget to bring along enough carriage bolts, for example, an inexpensive material item will become a very expensive labor item by the time you leave and return to the site with the bolt. Also, you can price out an entire entity, such as a terminal post, and have a lump-sum price for an item. That way, all you have to do to price out a job is count items, measure fence fabric lengths, and apply total prices for each item.

Even after you've figured your unit costs, you have to update them constantly to reflect changing material prices and labor rates. Only you can decide if the time and trouble is balanced by faster and more accurate estimating.

If you want to give it a try, you'll have to use your own costs for materials, value added, overhead and labor. But I can help with the labor times. In the rest of this chapter you'll find manhour tables you can use as guidelines for the time each operation will take.

Concrete Required at Fence Posts

Here's how to determine the amount of concrete required for a round post footing. Since a round footing is a cylinder, the answer is:

$$\text{Volume} = 3.14 \times \text{Radius}^2 \times \text{Depth}$$

The most convenient way to enter the dimensions is to enter them in terms of inches. This will give you a volume in terms of cubic inches that can be converted to cubic feet by dividing by 1,728 cu. in./cu. ft.:

$$12'' \times 12'' \times 12'' = 1{,}728 \text{ cu. in.}$$

To be mathematically accurate, we deduct the volume of the void created by the post. Here's an example: Determine the volume of concrete required for a post hole footing 10 inches in diameter and 30 inches deep if the post is 2⅝ inches in diameter. Since the diameter of the footing is 10 inches, the radius is 5 inches. Since the depth is 30 inches, the volume of the hole is:

$$3.14 \times 5'' \times 5'' \times 30'' = 2{,}363 \text{ cubic inches}$$

Since the radius of the post is 1.313 inches (2⅝" divided by 2), the void created by the post is:

$$3.14 \times 1.313'' \times 1.313'' \times 30'' = 162 \text{ cubic inches}$$

Deducting the void from the entire volume, we have:

$$2{,}363 - 162 = 2{,}201 \text{ cu. in.} \div 1{,}728 = 1.3 \text{ cubic feet of concrete}$$

Since the post hole isn't ever dug to the exact dimensions, and because of concrete waste, I don't deduct the volume of the void except for posts 4 inches in diameter and larger.

Cubic feet of concrete required for square wood posts			
Post size	**Hole diameter**	**Hole depth**	**Cubic feet of concrete per hole**
4″ x 4″	8″	24″	0.5
4″ x 4″	8″	30″	0.7
4″ x 4″	8″	36″	0.8
4″ x 4″	8″	48″	1.1
4″ x 4″	10″	24″	0.9
4″ x 4″	10″	30″	1.2
4″ x 4″	10″	36″	1.4
4″ x 4″	10″	48″	1.8
4″ x 4″	12″	24″	1.4
4″ x 4″	12″	30″	1.8
4″ x 4″	12″	36″	2.1
4″ x 4″	12″	48″	2.8
6″ x 6″	8″	24″	0.3
6″ x 6″	8″	30″	0.3
6″ x 6″	8″	36″	0.4
6″ x 6″	8″	48″	0.6
6″ x 6″	10″	24″	0.7
6″ x 6″	10″	30″	0.8
6″ x 6″	10″	36″	1.0
6″ x 6″	10″	48″	1.3
6″ x 6″	12″	24″	1.2
6″ x 6″	12″	30″	1.4
6″ x 6″	12″	36″	1.7
6″ x 6″	12″	48″	2.3

Figure 15-5
Square post hole concrete requirements

I've provided Figure 15-4 for your convenience in estimating concrete required for round posts with various post diameters, hole diameters and hole depths. Use Figure 15-5 to estimate the concrete required for square posts with various post dimensions, hole diameters and hole depths. Figures 15-4 and 15-5 deduct concrete displaced by the post volume.

When You Lose a Bid

What do you do when you've made your best estimate, but you don't get the job? First, try and find out why you didn't get it. A phone call to the customer sometimes works, but don't count on it. If the customer won't tell you, try to figure out what your competition is doing. Drive by the project while it's in progress. Are they using inferior materials? Cheaper labor? Are they taking shortcuts in workmanship? Or do they have better trained workers? Better equipment? Lower overhead?

Why bother trying to find out? Because … you'll be bidding against that same company again. You should know why you lost to them this time. If the labor, materials, workmanship and overhead are comparable, maybe you made a mistake in your estimate. Track it down. Maybe you allowed too much for travel time, or could have charged 5 percent less for contingencies. Maybe you just added wrong. If there was a mistake, find the reason and adjust your estimating procedure so it doesn't happen again.

Of course, it could have been your competitor who made the mistake, and he might have lost a bundle on the job. In any case, it pays to doublecheck your estimating system, especially if you begin to lose out on an increasing number of jobs.

Track your estimating performance — the number of jobs estimated compared to the number of jobs sold. See the section on the quote log in Chapter 12. You want to track the number of bids, the number that resulted in sales, the selling price of each job quoted, the type of work involved, who made the presentation, who prepared the estimate, problems you ran into if the job sold, and profit or loss on jobs you sold. Record the date you presented the bid, the dates you made any follow-up calls, who you spoke to, and what they said. Try to find out how much the job sold for even if you didn't get it.

Do you get a second chance to bid a job? Not often. But sometimes after the sale you'll have to re-price a job whether you want to or not. Be sure to write into any bid that the prices are good for only 30 days. Of course, once the contract is signed, you're committed to do the job at the quoted price, even if you made a mistake in the estimate that will cause you to lose money. If that happens, it sometimes works to go back to the customer with a revised estimate and a defeated look. Explain that you inadvertently omitted certain items. Resell the job, using the revised numbers. You may get a new contract — or you may get thrown out, or threatened with a lawsuit. All you can do is try.

There's one other situation when you might want to revise the original contract. That's when the customer signed the contract for a fair price, then wants you to do extra work, free. You can throw in a little extra in the name of goodwill and customer satisfaction. But don't let the customer take advantage of you. This is where a change order comes in. In fact, I recommend using a formal change order. If the customer wants to change the contract, I just write out a change order and explain all the price changes. Make the owner sign the change order. People often have short memories when you bring up the fact that you need to collect for the cost of the changes. On a big fence job, if the first change of price isn't significant, you can maintain goodwill with the customer by presenting him with a change order showing the costs involved, but don't charge him for the work. Explain to him that future changes *will* be charged to him. He'll become aware that bigger changes will be costly and that he'll have to pay for those.

On a change in materials, don't forget that you'll be charged for restocking the original material, and add the time and travel costs for returning the material to the dealer. Remember that special orders may not be returnable. You must either agree to keep them yourself and refund the cost, or they become the customer's property under the terms of the original contract. In either case, you charge for the replacement on the change order. The book *Construction Forms for Contractors*, available on the order form in the back of this book, has a change order form that you can use. Keep in mind that changes in the work can be more costly than you might realize. If nothing else, the paperwork can be time consuming. Also, workers' attitudes can be affected toward the job. For instance, no one likes to take down or demolish something he just got through building.

The Take-off Forms

The rest of the forms in this chapter are the ones I use, beginning with the customer contact form, then information sheets, specifications, and estimated labor hours. You're welcome to use them as they are, or adapt them for your own situation. You won't need all of these for a simple job, but the more information you collect, the more accurate your estimate will be.

Figure 15-6 is the customer contact form. Fill this in during your initial contact with any potential customer. I never recommend quoting prices over the phone — instead, use this first phone inquiry as an opportunity to make an appointment for a sales call.

Customer Contact	
Call taken by	**Date of call**
Customer name	Customer number
Address	Telephone
	NOTES:
City	
Zip	

Wants

- ❑ Information
- ❑ Quote
- ❑ Meeting
- ❑ Complaint
- ❑ Maintenance contract
- ❑ To talk to: _____
- ❑ To visit office
- ❑ Lunch date

Action required:

- ❑ Sales call
- ❑ Manager call
- ❑ Schedule visit
- ❑ Mail catalog

Appointment date

Time _____ ❑ AM ❑ PM

❑ Phone to confirm Telephone _____

Meeting place _____

❑ Meeting completed ❑ Postponed ❑ Cancelled

Results of meeting

❑ Sale made ❑ No sale ❑ New meeting scheduled

❑ Follow up dates

❑ Contact logged ❑ Contract number _____

Figure 15-6
Record your customer inquiries

The next four forms are general information and specification listings. You'll use the general information form (Figure 15-7) to gather information for all your jobs. It includes space for the site conditions and facilities, rental equipment you'll need, and a blank section for sketches and notes. Figure 15-8, general specifications, covers the size, construction details, gates, latches and coatings. Then you'll use Figure 15-9 or 15-10 for fence specifications and wall specifications.

General Information

Contract number _____ **Job foreman** _____ **Customer name** _____

Site terrain	Ground cover	Soil type	Excavation	Clearing by
❑ Level	❑ Clear, some grass	❑ Clay	❑ By hand	❑ Hand
❑ One slope	❑ Tall grasses	❑ Dirt	❑ Two-man auger	❑ Power mower
❑ Varied slopes	❑ Brush	❑ Gravel	❑ Truck auger	❑ Chain saw
❑ Hilly	❑ Small trees	❑ Loam	❑ Backhoe	❑ Backhoe
❑ Mountainous	❑ Large trees	❑ Rocky	❑ Dozer	❑ Dozer
❑ Swampy	❑ Small rocks	❑ Rock	❑ Soil test required	❑ Dredge
❑ Under water	❑ Large rocks	❑ Mixed	❑ Sub out job	❑ Owner
❑ _____	❑ Mixture	❑ _____	❑ _____	❑ Sub out

Obstructions	Underground obstruction	Removal required	Site drainage	Rental equipment required:
❑ Hill	❑ Concrete	❑ Fence	❑ Very good	❑ Yes
❑ Tree	❑ Electric line	❑ Concrete wall	❑ Fair to good	❑ No
❑ Boulder	❑ Gas line	❑ Stone wall	❑ Fair	See listing
❑ Stream	❑ Phone line	❑ Block/brick wall	❑ Poor	
❑ Building	❑ Rocks	❑ All ground cover	❑ Very poor	
❑ _____	❑ Wood & roots	❑ Trash	❑ _____	
❑ _____	❑ Detected, unknown	❑ Sub out job	❑ _____	

Site type	Site facilities	Landscaping	*NOTES:*
❑ Residential	❑ Electric	❑ Required	
❑ Commercial	❑ Toilet	❑ Sub out	
❑ Industrial	❑ Hose bib	❑ Grasses	
❑ Local government	❑ Storage	❑ Buses	
❑ Federal government	❑ Security	❑ Flowers	
❑ Association	❑ Rental yard	❑ Trees	
❑ _____	❑ Suppliers	❑ _____	

Figure 15-7
General information

General Specifications

Contract number _____ **Job foreman** _____ **Customer name** _____

Fence or wall

Physical	Post mounting	Post to rail connection	Post size	Sections are
Length _____	❑ Direct in dirt	❑ Butt joint	❑ 4 x 4	❑ Built on site
Height _____	❑ Dirt fill	❑ Miter joint	❑ 3″ diameter	❑ Built in shop
Base width _____	❑ Concrete	❑ Mortised	❑ 4″ diameter	❑ Purchased
Top width _____	❑ Metal holder	❑ Slotted	❑ 5″ diameter	❑ Both, specify
Frost line _____	❑ To wood deck	❑ Lap joint	❑ 6″ diameter	_____
❑ No. of corners		❑ Metal holder	❑ 8″ diameter	Foundation is
❑ No. of gates			❑ Metal	❑ Rebar reinforced

Picket style	Gates	Gate top design	Joint finish	Final coating
❑ Square	❑ Entry, 3′ wood	❑ Square	❑ Concave	❑ Painted
❑ Rounded	❑ Entry, 3′ metal	❑ Concave	❑ Flush	❑ Transparent stain
❑ Bevel	❑ Drive, 8′ wood	❑ Convex	❑ Bead	❑ Solid stain
❑ Gothic	❑ Drive, 8′ metal	❑ Scroll	❑ Weather	❑ Masonry paint
❑ Mod. Gothic	❑ Drive, 16′ wood	❑ Picket	❑ Raked	❑ Water shield
❑ Fr. Gothic	❑ Drive, 16′ metal		❑ Squeezed	❑ Natural
❑ Pointed	❑ Entry, chain link	Gate hinges	Other	*NOTES:*
❑ Dog ear	❑ Drive, chain link	❑ Steel	❑ Entry arch	
❑ Twin point	❑ Security	❑ Brass	❑ Ground rods	
❑ Bent point	❑ Electric	❑ Aluminum	❑ Spigots	
	❑ Self-closing	❑ Wrought iron	❑ Lights	
		❑ Strap	❑ Outlets	
Lock type	Latch type	❑ Tee	❑ Planters	
❑ Standard	❑ Hook & eye	❑ Concealed	❑ Security system	
❑ Security	❑ Bar & slot	❑ Butt	❑	

Figure 15-8
General specifications

Fence Specifications

Contract number _____ **Job foreman** _____ **Customer name** _____

Fence style

Wood fence	Chain link	Wire mesh	Barbed wire	Metal fence	Other
❑ Basketweave	❑ Residential	❑ Poultry	❑ 1 strand	❑ Guardrail	❑ Chain
❑ Board	❑ Commercial	❑ Garden	❑ 2 strand	❑ Tubular	❑ Rope
❑ Panel	❑ Tennis court	❑ Pets	❑ ___ strands	❑ Pipe	❑ Glass
❑ Picket	❑ Security	❑ Livestock	❑ Razor wire	❑ Wrought iron	❑ Fiberglass
❑ Rail	❑ Rental	❑ Electric	❑ Loose coil	❑ Security	❑ Logs
❑ Virginia rail	❑ With barbs	❑ _____	❑ Electric	❑ Livestock	❑ Other
❑ Alternating board	❑ Privacy	❑ _____	❑ _____	❑ Railing	❑ _____
❑ Horizontal louver					
❑ Vertical louver					

Materials

❑ Surfaced	❑ Light duty	Style number	Wire number	❑ Printed	Selected:
❑ Rough	❑ Heavy duty			❑ Zinc coated	_____
❑ Douglas fir	❑ Zinc coated	❑ Zinc coated	❑ 2 pt. barb	❑ Aluminum	_____
❑ Pine	❑ Plastic coated	❑ Plastic	❑ 4 pt. barb	❑ Wrought iron	_____
❑ Redwood	❑ Aluminum	❑ Other	❑ Other	❑ Cast	_____
❑ Cedar					_____
❑ Wormy cedar		Posts	Posts	Posts	_____
❑ Lattice		❑ Wood	❑ Wood	❑ Metal	_____
❑ Plywood		❑ Metal	❑ Metal	❑ Wood	_____
❑ Siding				❑ Pilaster	_____
❑ Site select				❑ Concrete	_____
❑ Treated					
❑ Other					

Figure 15-9
Fence specifications

Wall Specifications

Contract number _____ **Job foreman** _____ **Customer name** _____

Wall style

Block	Brick	Stone	Poured concrete
❑ American bond	❑ American bond	❑ Rubble, stacked	❑ Retaining
❑ Dutch cross bond	❑ Dutch cross bond	❑ Split face	❑ Seawall
❑ Flemish bond	❑ Flemish bond	❑ Veneer	❑ Base of other material
❑ Roman bond	❑ Roman bond	❑ Ashlar, coursed	❑ Prefab sections
❑ Running bond	❑ Running bond	❑ Ashlar, random	❑ Rebar reinforced
❑ Stack bond	❑ Stack bond	❑ Seawall	❑ Sculptured/free form
❑ Stack header	❑ Stack header	❑ Land clearing	❑ Erosion control
❑ Stack soldier	❑ Stack soldier	❑ Dry set	❑ Traffic control
❑ Ashlar, coursed	❑ Ashlar, coursed	❑ Wet set (mortar)	❑ Concrete Type: _____
❑ Ashlar, random	❑ Ashlar, random	❑ Retaining	❑ Rebar Size: _____
❑ Retaining	❑ Veneer	❑ Fieldstone	❑ Forms
❑ 2 core	❑ Smooth face	❑ Split face	*NOTES:*
❑ 3 core	❑ Stipple	❑ Sandstone	
❑ Solid	❑ Sand texture	❑ Bluestone	
❑ Split face	❑ Scored face	❑ Hawaiian	
❑ Slumped	❑ Water marked	❑ Volcanic	
❑ Screen	❑ Fire brick	❑ Limestone	
❑ Offset	❑ Split face	❑ Concrete	
❑ Scored face	❑ Used		
Mortar type _____	Mortar type _____	Mortar type _____	

Figure 15-10
Wall specifications

Figure 15-11, estimated labor hours, is a summary sheet for the manhours the job will take. The column headed "From Figure #" refers to my manhour tables at the end of the chapter. Just delete it if you use your own labor figures. If you're relying on my manhour tables, enter the figure number of the table you're using. For "Time each" enter the estimated time for each unit in the previous column. The "Extended time" column is the product of the previous two columns.

See Figure 15-12 for a sample of a filled-in daily milestone planning chart. We discussed this form earlier in the chapter.

If you use the manhour tables, I recommend that you make copies and keep them with the estimate. Arrange them in the order the work will be done, and you have a step-by-step description of how to do the job. If there are any steps on the tables you don't need for a particular job, just delete them from the totals. Also, add any steps that aren't listed.

Finally, summarize all of your job costs on an estimate summary. This is where you bring together your costs for material, labor, equipment, subcontractors, miscellaneous charges, overhead and profit, and calculate the final bid price. The estimate summary contains information about your costs and markup rates that you'll want to keep confidential. It should be an internal company form, not disclosed to your customer or subcontractors, and perhaps not even to your superintendent.

When these forms are filled out, you have all the information you need for your salespeople, accountant, estimator foreman, buyer, customer and any government agencies involved. Not bad for just checking off a few boxes.

Figure 15-13 is a contract requirements form. You won't need all this information just to build a simple fence, but the form is complete enough to cover the most complex job. Use it as a checklist to be sure your final contract contains everything you want covered, and that you've followed through on all the closing details once the job is complete.

Notice the blank in the second column for "Language." That's to remind you that if you make your sales presentation in a language other than English, you must also give your customer a signed copy of the contract in that language.

Manhour Tables

Take time now to browse through my manhour tables. Get comfortable with their organization and layout. At the beginning of the tables there's a chart (Figure 15-14) for converting fractional hours to minutes (or minutes to seconds). Most of the tables (Figures 15-15 through 15-27) have a column for hours, and the equivalent in minutes, but the conversion chart is there if you need it.

Estimated Labor Hours		
Job or bid number	**Date of estimate**	**Customer name**
Prepared by	**Reviewed by**	

General specifications:

Sketch attached ❑

From figure #	Operation required	Units installed	Time each	Extended time

NOTES:

Working hours subtotal _____

× Lost time factor [ ] _____

= _____

× Experience factor [ ] _____

= _____

× Terrain factor [ ] _____

= _____

Plus additional hours for:

_____ _____

Total billable hours [ ]

❑ Working days ❑ Calendar days

Figure 15-11
Estimated labor hours

Job or bid #: B-456	Estimate date: 1/7							Customer: Joe White						
Prepared by: Mac Smith	Reviewed by: Fred Simmons							Address: 234 Main Street						
Calendar date	1/17	1/18	1/19	1/22	1/23	1/24	1/25	1/26	1/29	1/30	1/31	2/1		
Daily Milestone Planning Chart														
OPERATION	**1**	**2**	**3**	**4**	**5**	**6**	**7**	**8**	**9**	**10**	**11**	**12**	**13**	**14**
Sales call														
Sign contract														
Collect deposit														
Plan job														
Order material														
Schedule help														
Site layout														
Rent auger														
Dig holes														
Collect 20%														
Return auger														
Receive concrete														
Helper on job														
Install posts														
Cure time														
Collect 20% on concrete comp														
Install rails														
Install face boards														
Install gates														
Cleanup														
Collect balance														

Figure 15-12
Visual planning chart

Contract Requirements

Contract type
- ❑ Time and material
- ❑ Fixed rate
- ❑ Cost plus
- ❑ Maintenance
- ❑ _____

Docs required
- ❑ Permit
- ❑ Bond
- ❑ Lien
- ❑ _____
- ❑ _____

Contract information
Date signed_____
Start date _____
Comp. date _____
Contract price _____
Master file no._____

Customer information
Name _____
Address_____
City _____ Zip _____
Phone_____ Work_____
Hours to contact _____

Payments
Deposit _____
Payment _____
Payment _____
Payment _____
Total paid _____

Contract type
- ❑ Office file
- ❑ Customer
- ❑ Foreman
- ❑ Sales
- ❑ Government
- ❑ _____

Language
- ❑ Sales talk
- ❑ Sales contract
- ❑ Additional
- ❑ Both to customer

Contract end checklist
Work comp. date _____
Completion notice_____
Bond returned _____
Lien canceled _____
Full payment rec'd_____

Drawings required
- ❑ Site layout
- ❑ Elevation
- ❑ Detailed
- ❑ Artist's concept
- ❑ Sketch only
- ❑ None required

Engineering
- ❑ Civil
- ❑ Design
- ❑ Firm name

Drawings sets required
- ❑ Office file
- ❑ Foreman
- ❑ Fabrication shop
- ❑ Subcontractor
- ❑ Suppliers
- ❑ Bldg. department
- ❑ Loan office
- ❑ Customer
- ❑ Homeowner's ass'n.
- ❑ Government

Subcontractors
- ❑ Equip. operators
- ❑ Metal shop
- ❑ Carpentry shop
- ❑ Landscaper
- ❑ Tree removal
- ❑ Demolition
- ❑ Divers
- ❑ Blaster
- ❑ Hot tar application
- ❑ Painter
- ❑ Concrete

Staff required **Name(s)**
- ❑ Carpenter _____
- ❑ Drafter _____
- ❑ Driver _____
- ❑ Engineer _____
- ❑ Laborer _____
- ❑ Mason _____
- ❑ Metal worker _____
- ❑ Security _____
- ❑ Welder _____
- ❑ Job foreman _____

Figure 15-13
Contract requirements

When you have to determine your own labor costs for something you've never done before, keep the following elements of labor involved with any task:

- read plans
- order materials
- receive and store materials
- move material to job site
- tool up
- measure and lay out
- install material
- test functionality
- clean up
- breaks

I've arranged the tables in chronological order (more or less), beginning with site layout (Figure 15-15) and land clearing (Figure 15-16). Then there are tables for post holes and posts, wood fences, metal fences, gates, foundations, and masonry fences and walls. Finally, you'll find my charts for the factors to apply to the times in the manhour tables to adjust for terrain conditions and the experience of the workers. There are lines on the labor estimating chart for applying these factors.

Hours to minutes or Minutes to seconds	
.010	0.6
.015	0.9
.020	1.2
.030	1.8
.040	2.4
.050	3.0
.100	6.0
.200	12.0
.300	18.0
.400	24.0
.500	30.0
.600	36.0
.700	42.0
.800	48.0
.900	54.0
1.000	60.0

Figure 15-14
Time conversion

Site layout				
	Minimum time		Typical time	
Operation	Hours	Mins.	Hours	Mins.
Travel time	.6	36	.6	36
Walk fence line	.2	12	.2	12
Review plans	.2	12	.2	12
Mark fence line	1.5	90	1.5	90
Mark post positions	2.5	150	2.5	150
Discuss changes	—	—	.5	30
Write change order	—	—	.2	12
Confirm customer's approval	.2	12	.5	30
Travel time	.6	36	.6	36
Adjust labor & material	—	—	.8	48
TOTALS	**5.8**	**348**	**7.6**	**456**

Figure 15-15
Times for site layout

Land clearing		
Per 100 feet of fence line, 6 feet wide, average		
Operation	**Equipment**	**Hours**
Remove high grass, small shrubs	Mower	1.0
Remove medium to dense brush	Hand cut	4.0
Remove soil, hillside, per cubic yard	Dozer	0.1
Remove small boulders, less than 3' dia.	Dozer	1.0
Remove large boulders, over 3' dia.	Dynamite	2.0 each
Remove small trees, less than 4" dia.	Chain saw	0.5 each
Remove large trees, over 4" dia.	Chain saw	3.5 each

Figure 15-16
Land clearing

Before you add the actual labor hours for construction to your estimate, pad it by 10 to 20 percent to account for lunches, breaks, talking to your customer, and those days when you don't feel top-notch and can't produce as much as you'd like to. That should be enough of a cushion. (If you and your crews aren't producing for at least $7^1/_2$ hours of each 8-hour workday, someone should be fired.)

Divide these total hours by the number of hours in your normal work day. This will give you the number of work days it will take to complete this job. And don't forget that's *work* days, not calendar days. You have to consider weekends, holidays, sick days, vacation days, and curing days. What are curing days? The two to five days when the concrete you poured is setting up. You have to factor them into your completion date. But find something else to do during that time.

Now add your travel time to and from the job for each day, unless you're accounted for your salary and vehicle expenses in the general overhead. Also add a cost per mile per day to cover the cost of operating your vehicle. Not all contractors add this travel time and mileage. They figure they'd have to drive to work at their expense if they worked for someone else, so why charge their customers? I'll admit they have a point. But I'll charge for travel whenever I can do so and still remain competitive. Whenever I leave my office or home for a job, I'm on the *customer's* time.

It takes away from production time to set up and tear down each day. That's the time when you pull out your tools in the morning, and put them back again at night. That can take anywhere from 10 minutes to an hour each day. And you have to allow for cleanup at the end of the job. That time can add up.

You can also count on spending some time waiting around for others to do their jobs. Earlier in the chapter I mentioned the problem of the late transit-mix truck. Suppose you ordered a load of concrete for Monday morning at

8:00 a.m. Your crew finished digging the trench and placing the rebar on Friday. Now it's 10:15 a.m. Monday, and there you sit. Finally, the truck pulls in and sets up, and you work your fanny off for an hour until the pour is complete. But you've lost 2½ hours when you could have been working on another job.

You can't hope to anticipate *all* the things that might throw your schedule off. But your past experience will help. Keep accurate records of things that cause delays, and correct the problems or allow for them on future jobs. It would be nice if you could pad your jobs to cover all potential problems, but you'd probably price yourself out of the market if you did that. Try to cover yourself, but be realistic.

Post hole excavation				
Time in hours for 8" diameter, 18" deep hole Operation				
	Loam	**Gravel**	**Rocky**	**Solid**
Dig by hand	0.4	0.6	1.0	n/a
Dig with power auger	0.2	0.2	0.3	n/a
Dig with truck auger	0.1	0.1	0.2	n/a
Drill, 2.5" diameter diamond drill	n/a	n/a	n/a	2.4
Foundation trench excavation				
Time in hours for 12" wide, 18" deep trench, 10 linear feet				
Operation	**Loam**	**Gravel**	**Rocky**	**Solid**
Dig by hand	4.0	5.0	8.0	n/a
Backhoe	0.3	0.3	0.5	n/a
Trencher	n/a	n/a	n/a	n/a

Figure 15-17
Excavation

Let's look at a few of the manhour tables. Figure 15-17 gives you an idea of the time it takes to dig post holes, considering the soil type and the method of excavation. Say you need to dig 20 post holes in gravelly soil with a two-man gas auger (one man if he's big and strong). It takes 0.2 hours per hole, or 4 hours (20 × 0.2 = 4).

Post planting		
Operation	**Hours**	**Mins.**
Lay in gravel drainage	.01	0.6
Set post in place	.01	0.6
Check alignment with other posts	.01	0.6
Plumb and brace	.12	7.2
Pour concrete or dirt fill	.03	1.8
Tamp	.01	0.6
Trowel drainage crown	.01	0.6
Inspect	.01	0.6
TOTALS	**.21**	**12.6**
Add for digging holes and mixing concrete. Double the time if you're using a helper.		

Figure 15-18
Post planting

When the holes are dug, use Figures 15-4 and 15-5 to estimate how much concrete you'll need for the post holes, and Figure 15-18 to determine how long it will take to set the posts. To plant those 20 posts, figure 0.21 hours each × 20, or 4.2 hours. That's 4 hours and 12 minutes. (See the time conversion chart, Figure 15-14, where 0.2 hours equals 12 minutes.) If you have a helper mixing concrete, add him in at 4.2 hours.

Ready for the rails? Look at Figure 15-19. Paint all rail and post lumber wherever they come in contact. My manhour estimates include time for this painting. There's also a factor to multiply by if you're using metal rail hangers or if you're making miter or other cuts in the post or rail. Look back to Chapter 1 for more information on attaching rails to posts.

Wood rail installation		
Operation	**Hours**	**Mins.**
Measure post opening	.01	0.6
Measure and cut each rail	.01	0.6
Measure rail position on post	.01	0.6
Nail one end in place	.01	0.6
Position other end	.01	0.6
Check for level	.01	0.6
Nail second end in place	.01	0.6
Recheck level	.01	0.6
Adjust if necessary	.01	0.6
Paint cut edges, post connections, and side toward facing lumber	.11	6.6
TOTALS	**.20**	**12.0**
Add for each metal rail hanger	.01	0.6
Add for miter or cut joints	.10	6.0

Typical time for 2 rails, painted, 24 minutes
Typical time for 2 rails, not painted, 12 minutes

Face board installation		
Operation	**Hours**	**Mins.**
Measure and cut each board	.01	0.6
Nail each board to top rail	.01	0.6
Plumb with level	.01	0.6
Nail each board to bottom rail	.01	0.6
TOTALS	**.04**	**2.4**

Typical time for nailing, 25 face boards per hour, 40-70 boards with labor savers. Typical time for stapling, 50 face boards per hour, 65-100 boards with labor savers. Add 36 seconds per board for painting contact side.

Labor savers:
Nail all boards with bottom even, cut all tops at once. Use a spacer as a jig for spacing boards evenly. Plumb only every few feet. Have a helper supply boards to nailer as needed. Soak-paint all boards before installation.

Cutting picket patterns		
Operation	**Hours**	**Mins.**
Make pattern	.50	30.0
Make template	.10	6.0
Mark pattern on picket	.01	0.6
Cut pattern	.02	1.2

Typical time to mark and cut 100 pickets, 3 hours

Labor savers:
Trace pattern from an existing fence.
Cut several pickets at once with a band saw.

Figure 15-19
Wood fences

Chain link installation		
Operation	**Hours**	**Mins.**
Roll fabric length of line	.10	6.0
Place tension bands on end post	.01	0.6
Lift fabric and install tension bar	.02	1.2
Install rail end on end post	.02	1.2
Install loop cap on each line post	.01	0.6
Slip each top rail section in place	.02	1.2
Cut last top rail to fit	.10	6.0
Install rail end on rail and end post	.02	1.2
Lift fabric and tie to each top rail	.02	1.2
Secure puller to end post	.04	2.4
Lift fabric onto puller	.01	0.6
Stretch fabric	.05	3.0
Install tension bar and bands to end post	.04	2.4
Cut fabric	.05	3.0
Tie fabric to each line post	.01	0.6

Typical time for 50-foot fence line with 6 posts, 54 minutes.

Typical time for 100-foot fence line with 11 posts, 78 minutes

Welding metal tubing		
Operation	**Hours**	**Mins.**
Measure and cut tubing to length	.02	1.2
Grind end surface	.01	0.6
Wire brush and clean	.01	0.6
Heat to temperature	.01	0.6
Apply welding rod	.01	0.6
Cool to touch	.02	1.2
Wire brush and clean	.01	0.6
Grind smooth	.02	1.2
Paint	.01	0.6
TOTALS	**.12**	**7.2**

This is the average time to weld 4" of seam joint, for example, a 1"-square`1 tube to another surface.

Figure 15-20
Chain link, wire, and metal fences

Form metal rail from sheet metal *(Sheet metal cut, bent, welded into two C-channels; 28 to 12 gauge CRS)*		
Operation	**Hours**	**Mins.**
Shear (cutter) setup — one time	.200	12.0
Brake (bender) setup — one time	.200	12.0
Shear up to 10' length, per cut	.005	0.3
Brake each piece, up to 10', per bend	.005	0.3
Remove grease and scale at weld area	.100	6.0
Clamp to table and second piece	.050	3.0
Weld, per linear inch	.020	1.2
Let each weld cool to touch	.020	1.2
Remove flux, wire brush, per unit	.020	1.2
Grind surface smooth, per unit	.500	30.0
Degrease entire assembly, per unit	.050	3.0
Paint entire assembly, per unit	.050	3.0
Typical time for 10' rail, 2 pieces less setup, 3.33 hours. Typical time for two 10' rails with end caps, full seam welded, 7.6 hours.		

Mount metal railing on a deck		
Operation	**Hours**	**Mins.**
Install first post holder	.10	6.0
Install each post	.01	0.6
Fit railing and mark location for second post	.02	1.2
Install second post holder	.02	1.2
Install second post	.01	0.6
Insert railing L-brackets and tighten all fasteners	.04	2.4
Additional operations: Cut railing section to fit	.05	3.0
Install prefab gate and latch	.20	12.0
Bend 2 railings to fit stairs	.20	12.0
Touch up paint edges	.20	12.0
Install in concrete, per section	.20	12.0
Total time for section installed on wood, 12 minutes. Typical times for a 3-sided deck, 12' x 24', with stairs and gate: 4-foot sections, 3.25 hours 6-foot sections, 2.45 hours 8-foot sections, 2.4 hours		

Figure 15-20, continued
Chain link, wire, and metal fences

String barbed wire, posts 20' oc		
Operation	**Hours**	**Mins.**
Attach wire to first post	.10	6.0
Loose-attach wire to each line post	.01	0.6
Attach stretcher to wire	.02	1.2
Stretch wire	.04	2.4
Attach wire to end post	.05	3.0
Typical time per strand per 100 feet, 15.6 minutes		

String wire mesh fence, posts 10' oc		
Operation	**Hours**	**Mins.**
Attach wire to first post	.10	6.0
Roll out wire and attach to each line post	.02	1.2
Install stretcher on wire	.02	1.2
Stretch wire	.04	2.4
Attach wire to end post	.10	6.0
Cut excess wire	.01	0.6
Typical time for 100-foot fence, 30 minutes		

Figure 15-20, continued
Chain link, wire, and metal fences

Build a wooden gate		
Operation	**Hours**	**Mins.**
Layout and design	.50	30.0
Measure and cut frame lumber	.10	6.0
Nail frame together	.10	6.0
Square up and measure cross brace	.05	3.0
Cut cross brace and nail in place	.05	3.0
Square up and add metal brackets	.10	6.0
Paint framing and face boards with roller	.10	6.0
Nail on 7 face boards	.07	4.2
Make top pattern	.11	6.6
Mark top pattern on gate	.02	1.2
Cut top pattern	.20	12.0
TOTALS	**1.40**	**84.0**
Typical time for 3-foot-wide gate, 1.4 hours Typical time for 8-foot-wide gate, 1.6 hours		

Build a tube steel gate, 39" wide, bars 5" oc		
Operation	**Hours**	**Mins.**
Measure and cut frame, 45-degree cut	.15	9.0
Measure and cut 6 vertical bars	.10	6.0
Clean weld areas	.10	6.0
Weld frame	.15	9.0
Weld in bars	.40	24.0
Weld on two hinges	.10	6.0
Weld on latch assembly	.10	6.0
Remove flux and grind smooth	.15	9.0
Degrease assembly	.10	6.0
Spray paint assembly	.10	6.0
TOTALS	**1.45**	**87.0**

Build a chain link gate, single section, any size		
Operation	**Hours**	**Mins.**
Layout and design	.50	30.0
Measure and cut framing members	.20	12.0
Slip on tension bands	.01	0.6
Slip on hinges and latch sections	.01	0.6
Fit framing to corner gussets	.05	3.0
Bolt on gussets	.10	6.0
Cut fabric to fit opening	.05	3.0
Install first side tension bar	.05	3.0
Stretch fabric	.05	3.0
Install second side tension bar	.05	3.0
Trim excess fabric	.05	3.0
Install cross brace	.10	6.0
Install top decoration	.10	6.0
TOTALS	**1.32**	**79.20**

Figure 15-21
Gates

Install a site-manufactured gate		
Operation	**Hours**	**Mins.**
Place into position	.05	3.0
Install top hinge	.06	3.6
Plumb and mark bottom hinge location	.01	0.6
Install bottom hinge	.06	3.6
Install latch	.06	3.6
Check operation and oil hinges	.01	0.6
TOTALS	**.25**	**15.0**
Times are for assembling with screws, using a power screwdriver. Add 5-10 minutes for drilling and bolting together, or using a hand screwdriver.		

Install a purchased 3' gate with hinges attached		
Operation	**Hours**	**Mins.**
Lift gate into position	.01	0.6
Install top hinge	.05	3.0
Install bottom hinge	.05	3.0
Check for plumb	.01	0.6
Install latch assembly	.05	3.0
TOTALS	**.17**	**10.2**
Time is less for a purchased gate, since most come predrilled, and some with hinges already attached. For a double gate, add 30 minutes for center latch.		

Figure 15-21, continued
Gates

Build 2x wood forms		
Operation	**Hours**	**Mins.**
Measure and cut lumber, per cut	.02	1.2
Nail on wood stakes, each	.01	0.6
Place into position	.02	1.2
Nail on each cross brace	.01	0.6
Level and square	.02	1.2
Apply release agent, oil	.02	1.2
Typical time to install a 10-foot, 2-sided 2 x 8 form is 28 minutes.		

Install rebar in foundation		
Operation	**Hours**	**Mins.**
Make each wire cradle	.01	0.6
Place each cradle in trench	.01	0.6
Cut rebar to length, per cut	.02	1.2
Bend rebar for corners, per bend	.03	1.8
Lay in each horizontal rebar	.01	0.6
Set each vertical rebar	.01	0.6
Tie each connecting joint	.01	0.6
Typical time to install rebar into a 10-foot section of foundation is 48 minutes.		

Pour concrete, per cubic yard (12" x 18" x 18')		
Operation	**Hours**	**Mins.**
Pour	.10	6.0
Tamp or vibrate	.10	6.0
Trowel semi-smooth	.10	6.0
Cover or wet down	.10	6.0
Remove forms	.10	6.0

Allow for curing time.

Add 6 minutes for getting into position to begin pour.

Typical time for ready-mix straight from a truck chute is 30 minutes per cubic yard, 18 minutes for a 12" x 18" x 10' section of foundation.

Figure 15-22
Reinforced concrete foundations

Build 10' stone wall, 36" high x 22" wide		
Operation	**Hours**	**Mins.**
Butter foundation as you proceed	.50	30.0
Lay 425 6"-diameter stones, with mortar	4.25	255.0
Rake joints	.50	30.0
Acid wash and clear water rinse	1.00	60.0

Allow 2-4 days curing time.

Add 10-15 percent to total for selecting stones.

Add 1.2 minutes per cut for cutting stone.

Typical time for wet set wall, 8 hours; for dry set, 4 hours.

Brick wall, common bond, single thickness, 3' x 10'

Operation

An experienced mason can butter a brick, place it into position, tap it level and plumb and butter the brick end in about 20 seconds, or about 174 bricks per hour. That's enough for a 3 x 10 foot common bond wall, one brick thick.

A hollow-core, double-sided, reinforced wall 3 x 10 feet will take about 2.5 hours, including grouting. See Figure 15-22 for time required to install rebar.

Add about 1 minutes per cut for cutting.

Add 30 to 50 percent to these rates for other bond patterns.

Times are for mason only. Allow the same amount of time (at a different rate) for a helper to mix mortar, rake joints, and supply bricks.

Concrete block wall, single thickness, 32" x 10' long

Operation

The time to butter, lay in, level and plumb the 30 standard blocks required for a block wall is only slightly less than that for a brick wall of the same size. This is due to the size and weight of the block. Use the same time estimates: 1 hour for a single, 2.5 hours for a double-sided wall with a grout-filled core.

Figure 15-23
Masonry

Poured concrete wall		
Operation	**Hours**	**Mins.**
Clean foundation concrete	.10	6.0
Install pre-built form, one side	.20	12.0
Apply oil or release fluid	.10	6.0
Install horizontal rebar	.15	9.0
Apply oil or release to second form	.10	6.0
Install second form	.10	6.0
Pour or pump in concrete, 42" deep	.50	30.0
Vibrate concrete	.50	30.0
(Allow curing time, 2-5 days)	—	—
Clean top of existing concrete	.10	6.0
Pour or pump remainder	.70	42.0
Vibrate concrete	.70	42.0
(Allow curing time, 1 day)	—	—
Remove and clean forms	1.00	60.0
(Cover and allow curing time 2-5 days)	—	—
Remove cover, install cap	1.10	66.0
TOTALS	**5.45**	**327**
Allow for extra travel time because of job interruptions for curing.		

Apply veneer to an existing wall, per 6 x 10 foot section		
Operation	**Hours**	**Mins.**
Lay out veneer on ground along wall line	.70	42.0
Apply ½" thick mortar to a 2 x 2 foot wall area	.02	1.2
Press veneer into mortar (repeat for each 2' x 2' area)	.02	1.2
Press mortar into all joints	.50	30.0
Wash wall with brush and clear water	.50	30.0
Rake joints	.50	30.0
Acid wash and clear water rinse	1.00	60.0
Allow for curing time and extra travel time. Allow time for mixing mortar, or for a helper. Typical time for a 6 x 10 foot wall, 3.8 hours.		

Figure 15-24
Concrete and veneer

Pilaster made from brick, 22" x 22" x 6'		
Operation	**Hours**	**Mins.**
Butter foundation	.01	0.6
Lay 240 bricks	1.33	79.8
Cut and insert 4 rebar	.10	6.0
Mix and pour 18 bags grout	.60	36.0
Install cap block	.02	1.2
TOTALS	**2.06**	**123.6**
Allow for helper to mix mortar, rake joints Typical time with grout, 2 hours Typical time without grout, 1.3 hours		

Pilaster made from pilaster block 9 blocks, 6' high		
Operation	**Hours**	**Mins.**
Butter foundation	.01	0.6
Lay in each alternate block	.02	1.2
Lay in each pilaster block	.02	1.2
Cut and insert 4 rebar	.10	6.0
Mix and pour 12 bags grout	.40	24.0
Install cap block	.02	1.2
Typical time with grout, 42 minutes Typical time without grout, 18 minutes		

Mount a rail between pilasters		
Operation	**Hours**	**Mins.**
Measure and cut railing	.10	6.0
Insert L-brackets in rail ends	.01	0.6
Mark holes in pilaster	.05	3.0
Drill holes	.10	6.0
Insert expansion bolt sleeves	.01	0.6
Place railing in position	.01	0.6
Insert bolts and tighten	.05	3.0
TOTALS	**.33**	**19.8**

Figure 15-25
Pilasters

Mixing mortar or concrete		
Operation	**Hours**	**Mins.**
Pour mix into wheelbarrow or tray	.02	1.2
Dry stir	.02	1.2
Measure water	.01	0.6
Add half of water and mix	.02	1.2
Add water until mix feels right	.06	3.6
Complete mixing	.02	1.2
TOTALS	**.15**	**9.0**
Typical time to mix 1 bag by hand, 10 minutes Typical time to mix 2-4 bags by machine, 15 minutes		

Figure 15-26
Mortar

Install ground rod, min. feet into ground		
Operation	**Hours**	**Mins.**
Pound 8' x ½" copper rod into ground	.02	1.2
Attach ½" cable clamp	.02	1.2
Clean fence metal or wire to bare metal	.02	1.2
Attach 12 gauge wire and clamp	.01	0.6
Attach wire to ground rod	.01	0.6
TOTALS	**.16**	**9.6**
Typical time to install one rod, 10 minutes. Ground rod required every 150 feet on metal or wire fencing.		

Figure 15-27
Ground rod installation

Terrain difficulty factors (add to total job)	
Terrain type	**Multiply hours by**
Level, clear	1.0
Level, with obstructions	Add for clearing
Slope in one direction, clear	1.2
Multiple slopes, some obstructions	1.4
Very rough, hilly	1.6
Very rough, mountainous	2.0
Acid wash and clear water rinse Apply this factor to total job hours to allow for added difficulty in bringing materials and equipment to the jobsite, and working on uneven terrain. See also Figure 15-16, Land clearing	

Figure 15-28
Terrain difficulty

Experience factor	
Experience	**Multiply time by**
Fully qualified	1.0
Qualified, but hasn't done job before	1.1
General understanding of job	1.2
Limited experience in construction	1.4
Trainee, no experience	1.6
Homeowner, working part time	2.0
Apply different factors to parts of multiple tasks, depending on who is doing the work. Allow plenty of time for jobs the homeowner elects to do. Customers often lack experience, they won't be working under supervision, and are unlikely to devote the entire workday to the job so they'll spend extra time on setup and cleanup.	

Figure 15-29
Experience factor

By now you may be wondering why I don't just give you a total job time for each fence or wall instead of breaking it down into tasks. There are two reasons. First, I want you to understand what it takes to do a job. Second, there's no way to give you a manhour estimate for a chain link fence, for example. There are just too many variables. No two jobs are exactly alike. Of course I could give you labor estimates like that, but I can just about guarantee that they wouldn't apply to the job you're doing. With my tables, you can use the times for each step that your job includes, and customize them further with the terrain and experience factors.

I suggest you keep accurate job records and compare your actual times to the ones in my tables. Then change the tables to reflect your experience.

In the next chapter, we'll study the subject of contractor's math — a very popular subject on state license exams.

This page left intentionally blank

Chapter 16

Contractor's Math

I TAUGHT MATHEMATICS TO PUBLIC school students and to estimators for years, and along the way, I became pretty good at simplifying this subject. I think that if you take the time to study what I've presented in this chapter, you'll agree that it's more than worth the cost of this book.

When I was in school, I remember the whole class groaning when the math teacher announced that we'd be working stated problems that day. In my professional experience, I've discovered that, in the real world, those are the kinds of problems we have to solve frequently. Following are some stated problems that pertain to fence contracting. But before we get started, I have a few suggestions:

1. When you work a stated problem, write down all the information that you know, as well as the information you're trying to obtain by working the problem.
2. Draw pictures to help you get a visual concept of the problem.
3. Carefully write down every step you take as you solve the problem; don't take shortcuts.
4. When you obtain a solution, think about the answer. Is it reasonable?
5. Like it or not, you need to memorize some of the more commonly-used math formulas.

One final suggestion to you: Don't just read the following examples; work them out using pencil and paper.

Some of you are reading this book and chapter to prepare for a state license exam. Here's some good advice: Regardless of what portion of a test you're taking, work all of the questions that you know the answers to first. *Then* go back and work out the questions that require more thought.

Simplifying the Situation

Here's a problem that requires common sense: You have a chain link fence 180 feet long with two end posts. How many line posts are required if the posts are installed on 10-foot centers? The number of posts required for the entire fence is (180 ÷ 10) + 1 (the 180 ÷ 10 portion of the formula only gives us the number of spaces required between the posts, so we have to add one to get the total number of posts required). So we have a total of 19 posts, two of which are end posts, which means we'll need 17 line posts.

This brings me to the subject of *problem simplification*. If you're taking an exam or bidding a job and you're running out of time, the best way to solve the above problem is by simplifying things — making a quick drawing where the fence is only 30 feet long. By examining the quick drawing, you know that you'll need two end posts and only two line posts. Now, what is the formula that would solve this or any question like it? 30 ÷ 10 = 3. But, looking at your simplified drawing, you see you'll need four posts, two of which are line posts. So, the formula must be:

> ***Keep in mind*** that when items are enclosed by parentheses, you perform the math within the parentheses before working the remainder of the problem.

Number of Total Posts = (Total Fence Length ÷ Post Spacing) + 1
Total Line Posts = Total Posts – 2 End Posts

Believe me: These formulas will work for any length of fence like the one given in the original problem.

Any time you create an equation that you anticipate using quite often, write it down in a personal manual. I have a surveyor's field book where I keep the formulas I use most often, as well as hand-drawn figures and examples for reference. This has been a life (and time!) saver. (See Figure 16-1).

Conversion Factors

Here's a concept that should help you work any problem, but first, let's review the definitions of two words: *numerator* and *denominator*. The numerator of a fraction is the number on top, and the denominator is the number on the bottom. Remember that when you multiply fractions, *like*, or *identical* numerator and denominator units will cancel each other out. Knowing

> ***In the problems*** that follow, "/" is read as "per."
>
> **For Example:** 3 feet/yard is read as 3 feet per yard.

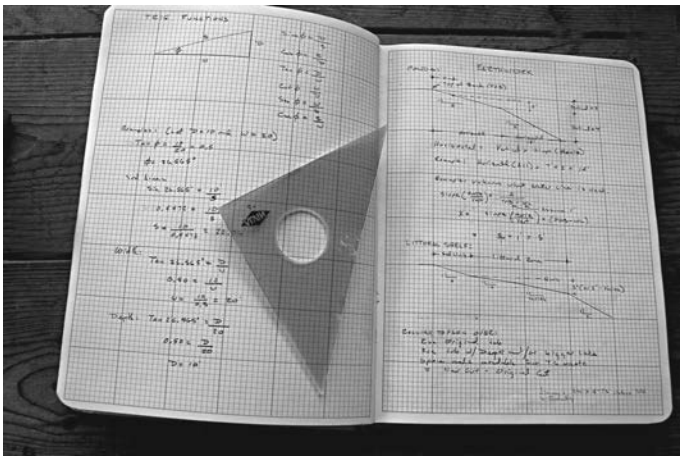

Figure 16-1
My math toolbox

this, we can set up a conversion problem mechanically so that every unwanted unit is canceled except for the desired units.

EXAMPLE What is the length of a football field, in inches?

SOLUTION Setting up the fraction so that all of the units cancel out except for the ones we want in the answer, we have 100 yards × 3 feet/yard × 12 inches/foot = 3,600 inches. In this problem, the yard in the first number cancels out the yard in the denominator of the first fraction, and feet in the numerator of the first fraction cancels feet in the denominator of the second fraction, leaving only inches in the final answer.

All of the fractions in the problem are called *conversion factors*. Multiplying a number by a conversion factor doesn't change the value of the number because each conversion factor is equal to 1, so we're not changing anything except one unit to another type of unit. If you learn how to use this mechanical way to solve conversions, you can accurately work complicated problems. We'll work more conversion factor problems in the metric section of this chapter.

Working with Percentages

Let's work some percentage problems. The word *percent* comes from the Latin word *centum*, which means "hundred." So percent means per hundred. For example, if 40 people out of a group of 100 are women, they constitute 40 percent of the entire group. Since 100 percent represents the total group, the men constitute 100 – 40 = 60 percent of the total. Now, let's express the female population as a decimal by dividing 40 by 100 (40 ÷ 100 = 0.40). Doing the same calculation for the male population, the decimal equivalent is 0.60. What's nice about this is that in order to determine the percentage of a part of a group to the total of the group, all we have to do is divide the part by the whole. If the entire group is 10 and eight of them are women, the percentage of females is still 80 percent (8 ÷ 10 = 0.80).

EXAMPLE What is the percentage of females and males if the women constitute 120 members out of a total group of 300 people?

SOLUTION The percentage of females is 120 ÷ 300 = 0.40 = 40 percent. The percentage of males can be found in two ways. We know that the total group constitutes 100 percent and the female population constitutes 40 percent, which means that the men constitute 60 percent of the total. Another way to work the problem is to subtract the number of women from the total to determine the number of men, or 300 − 120 = 180. So the men are 180 ÷ 300 = 0.60 = 60 percent of the total.

Percentages of Increase

If a number is increased, you can determine the percentage of increase by adding the decimal form of the percentage increase to 1. For example, if the price on an item that originally sold for $40 is increased by 25 percent, you can determine the new price by multiplying the original price by 1.25, or (125 ÷ 100 = 1.25), or in this case, $40 × 1.25 = $50. Here's another example: You tip the waitress 15 percent of the total bill. If your lunch tab was $12, what will be the total you owe, including the tip? Multiply the bill by 1.15, or ($12 × 1.15 = $13.80).

Percentages of Decrease

On the other hand, if a number is decreased, or if you're trying to determine a portion of a total, you can determine the decrease or portion by subtracting the decimal form of the percent from 1 before you multiply. For example, if the $40 item is decreased by 25 percent, subtract 0.25 from 1 to get 0.75. To get the new price of the article, multiply this percent by the original price to get 0.75 × $40 = $30. Another way to look at this is that you're determining a portion (75 percent) of the original sales price of the item.

How much was the waitress's tip in the example given above? The tip was 0.15 × $12 = $1.80. If the waitress has to share 15 percent of her tips with the busboy, how much does the busboy get out of the tip you paid? The busboy is entitled to 0.15 × $1.80 = $0.27.

How much of her tip did the waitress get to keep? The waitress's entire tip was $1.80, and the busboy got 15 percent of that, so the portion of her tip she kept is 85 percent (1.00 − 0.15), or 0.85 × 1.80 = $1.53. I know that it would have been easier to simply subtract the busboy's portion of the total ($1.80 − $0.27 = $1.53), but I want to drill you until you become adept at working percentage problems.

Let's say you get a good fence project with the help of a friend, who gets a 2 percent finder's fee. If the total project was successfully bid at $5,000, how much will you have to pay your friend? Two percent is 0.02 in decimal form (2 ÷ 100), so the debt is 0.02 × $5,000 = $100. Here's another way to look at the problem: The friend gets $2 out of each $100. When all is said and done, you'll receive the equivalent of fifty crisp $100 bills ($5,000 ÷ $100 = 50), so you'll owe your friend 50 × $2 = $100.

Here's another example that combines an increase and a decrease in the value of a number, as well as a portion of a number. A store increases the cost of a tool by 30 percent, and then later discounts the same item by 10 percent. If the original cost was $50, what is the new selling price, excluding sales tax? The price after the increase is 1.30 × $50 = $65. After the new price is discounted by 10 percent, the final price is 0.90 × $65 = $58.50. If the sales tax is 7 percent, what is the total price after the sales tax is included? The final price is 1.07 × $58.50 = $62.60. What is the sales tax on the final sale? The tax is 0.07 × 58.50 = $4.10. I want to remind you to work each problem, step by step, and carefully write down each step you take to solve a problem.

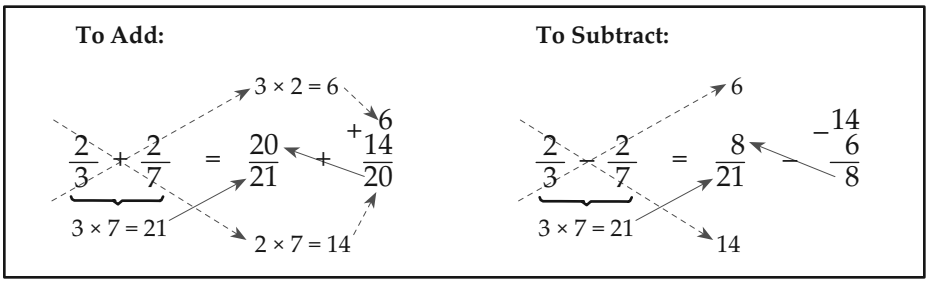

Figure 16-2
Adding and subtracting fractions

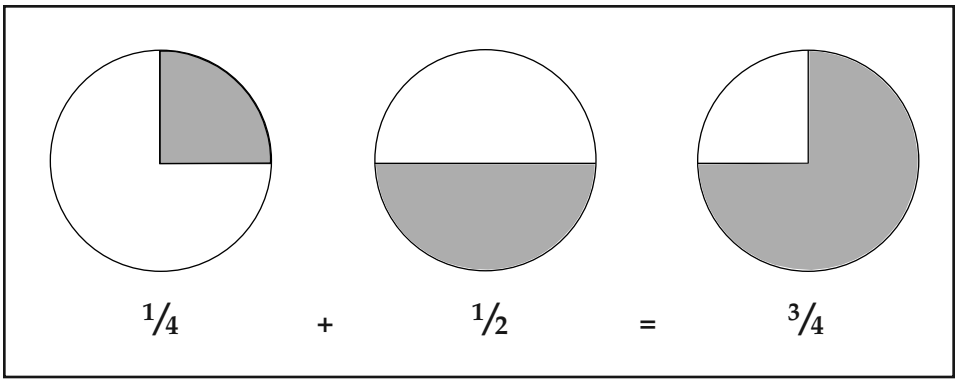

Figure 16-3
Pie diagram for ¼ + ½

Adding and Subtracting Fractions

When I was a youngster, learning how to add fractions was a difficult task, but as an adult, I finally figured out an easy way to do it. Look at Figure 16-2. To add fractions, multiply the denominators to get the final denominator, then cross-multiply the numerators with the denominators, then add the results to obtain the final numerator. To subtract fractions, use the same method, except subtract one cross-multiplication result from the other to obtain the final numerator.

In either case, the fraction might not come out in the lowest terms, but it's easy to convert to the lowest terms. For example, $\frac{1}{2} + \frac{1}{4} = \frac{6}{8}$, but we can convert this to an equivalent fraction with its lowest terms being $\frac{3}{4}$ by dividing both the numerator and denominator by 2. You can see results visually in Figure 16-3.

To help you understand what the lowest common denominator is, add $\frac{1}{3}$ to $\frac{1}{4}$ (see Figure 16-4). You can see that we had to convert $\frac{1}{3}$ to $\frac{4}{12}$ and $\frac{1}{4}$ to $\frac{3}{12}$, for a total of $\frac{7}{12}$. Fortunately, we usually don't have to construct a pie chart, so you can use the trick I just introduced to add and subtract fractions.

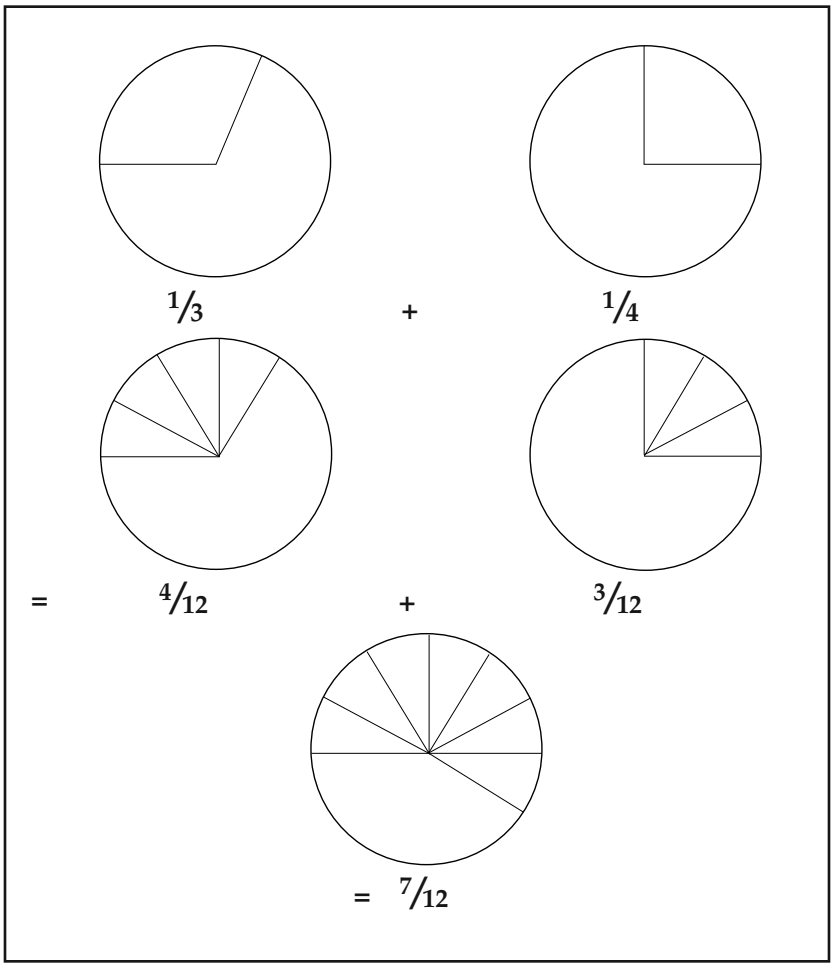

Figure 16-4
Pie diagram for $\frac{1}{3} + \frac{1}{4}$

Dividing Fractions

Remember memorizing that when you divide one fraction into another one, invert the divisor and multiply? Well, let's see what we're actually doing when we divide fractions.

For example, when we divide $\frac{1}{2}$ by $\frac{1}{4}$, what we're trying to determine is how many times $\frac{1}{4}$ will go into $\frac{1}{2}$ (the answer is twice). If we invert the divisor and multiply, we have $\frac{1}{2} \times \frac{4}{1}$, or $\frac{4}{2} = 2$. Another way to look at it is how many times $\frac{1}{4}$, or 0.25, will go into 0.50 (or how many quarters there are in a half dollar). Figure 16-5 shows graphically what we've just done.

Figure 16-6 shows what we get when we divide 1 by $\frac{1}{4}$. When we invert the divisor and multiply, we get $1 \times \frac{4}{1} = 1 \times 4 = 4$. But some situations don't lend themselves to such convenient graphics. For instance, $\frac{1}{3}$ divided by $\frac{1}{4} = \frac{1}{3} \times \frac{4}{1} = \frac{4}{3}$, which is $1\frac{1}{3}$, or 1.33.

Figure 16-5
A half divided by a quarter equals two

Figure 16-6
Quarters divided into a whole

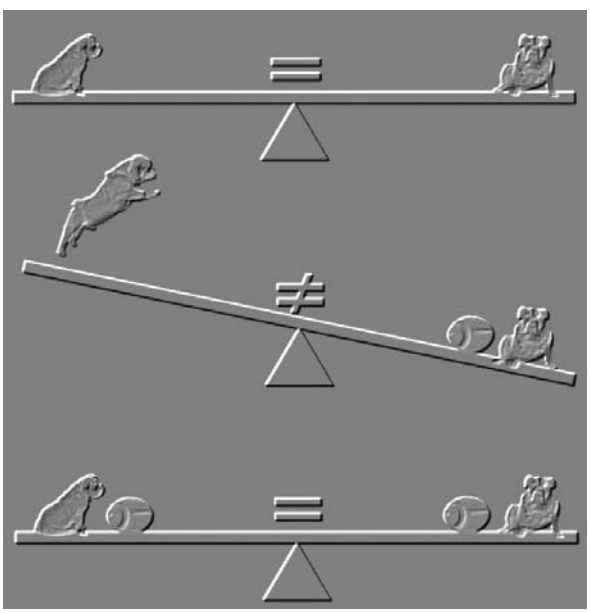

Figure 16-7
The Golden Rule of Equations

Algebra

Now I'm going to teach you all you'll probably ever need to know about algebra, and in a very short time. But first, a little story. Albert Einstein had a terrible time with algebra until his Uncle Jakob showed him how to play "cops and robbers" with the subject. This made an interesting game for Albert.

Here's how the story goes: There's a bad guy in an equation (an equation is simply a math statement with an "=" sign in it), and it's your job to find out who he is. But you must always follow one basic rule — *The Golden Rule of Equations* — which says "Do unto one side of the equation as you do to the other side of the equation." This will all make sense if you can imagine an equation being like a seesaw balanced on a fulcrum and the equal sign is right in the center. If you add some weight to one side of the seesaw, it will tip — unless you add an equal weight to the other side. The same will be true if you subtract weight from one side of seesaw but not the other. See Figure 16-7. Now let's do some examples.

Find the value of Q in the following equation: Q + 3 = 5. The answer is obviously 2, but sometimes it won't be so easy, so let's go ahead and work this one out. We want to isolate and expose Q, but he's got a buddy (3) with him, so we need to get his pal out of the way. By subtracting 3 from each side of the equation (recalling the "Golden Rule"), we get Q + 3 – 3 = 5 – 3, or Q = 2. Now, let's do one that's a bit more complicated.

EXAMPLE A contractor purchased a new machine on credit for $500, bringing the balance of his account to $782. What was the value of the original account?

SOLUTION We can express the problem this way: Q + $500 = $782, where Q is the original debt. Solving for Q, we have Q + $500 – $500 = $782 – $500, or Q = $282. Checking out answer by substituting $282 for Q, we have $282 + $500 = $782.

Let's do a subtraction problem. Solve for Q if Q – 58 = 120. Following the golden rule to isolate Q from his pal (58), we add 58 to both sides of the equation, or Q – 58 + 58 = 120 + 58. So Q = 178. Checking our answer via substitution, we have 178 – 58 = 120.

Now let's do some problems that involve multiplication and division. But before the do this, look at the examples above. Notice that in order to isolate Q, we had to perform the opposite operation on the numbers. That is, if Q was added to a number, we used subtraction to isolate Q, but if a number was subtracted from Q, we used addition to isolate Q. So if an unknown (Q) is multiplied by a number, we have to use the opposite operation (division) to isolate Q. For example, if 3 × Q = 30, Q is obviously equal to 10. But if 4.5Q = 36, then by dividing both sides of the equation by Q's pal (4.5), we get 4.5Q ÷ 4.5 = 36 ÷ 4.5, or Q = 8. Keep in mind that 4.5 ÷ 4.5 = 1, which cancels out Q's buddy by changing him into "1," and 1 × Q still equals Q. Checking the answer, we have 4.5 × 8 = 36. Gosh, we're good, aren't we?

EXAMPLE A contractor purchases three identical tools for a total of $630. How much did each tool cost?

SOLUTION The equation to solve this problem is 3 × G = $630, where G is the cost of each tool. We can isolate G by dividing each side of the equation by 3, or (3 × G) ÷ 3 = $630 ÷ 3, or A = $210. Checking our answer, we have 3 × $210 = $630.

Now let's do a division problem, Q ÷ 7 = 21. Since Q is divided by a number, we use the opposite operation (multiplication) to isolate Q, or 7 × (Q ÷ 7) = 21 × 7, so Q = 147. Checking our answer, we have 147 ÷ 7 = 21.

Sometimes you'll have to go through several steps to solve a problem. The following example will require both multiplication and subtraction to solve for the answer.

EXAMPLE The average cost per manhour for a 2-man fence crew is $32. If one man earns $30 per hour, what are the other man's wages?

SOLUTION The average cost per manhour is the sum of both men's wages divided by 2, since there are two men in the crew. So our equation to solve this problem is ($30 + M) ÷ 2 = $32, where M is the hourly wage of the second man. We can start by multiplying both sides of the equation by 2 to obtain 2 × ($30 + M) ÷ 2 = 2 × $32, or $30 + M = $64. We can then solve for M by subtracting $30 from each side of the equation, or $30 − $30 + M = $64 − $30. So M = $34.

Averages

The average value of a sum of numbers is equal to the total sum divided by the number of individual numbers used to obtain the total sum.

EXAMPLE What is the average price per manhour if John earns $30 an hour, Jim earns $35 an hour and Reid earns $25 an hour?

SOLUTION We have a total sum of $30 + $35 + $25 = $90, and a crew of three, so the average cost per manhour is $90 ÷ 3 = $30.

Ratios and Proportions

This takes us to another topic of solving problems called *ratio and proportion* problems. A ratio is simply a fraction. For example, the ratio of women to men attending a ballgame might be 1 out of 3, or ⅓. A proportion uses ratios that are equal, but there's an unknown quantity to solve for.

EXAMPLE Using the ratio given above, determine the number of women in the stands if the total crowd is 15,000 fans.

SOLUTION We set up the problem as follows: 1/3 = F/15,000, or 1 is to 3 as some unknown value (F) is to 15,000, where F equals the total number of women attending the game. We solve for F by multiplying each side of the equation by 15,000, or 15,000 ÷ 3 = F = 5,000.

EXAMPLE A 3-man crew can install 15 items per day. Assuming there is no duplication of work by any of the men and that there's enough room for all the crew to work efficiently, how many items can a 5-man crew install per day?

SOLUTION We can set up the proportion this way: 3/15 = 5/Q, where Q is the number of items installed per day by the larger crew. But there will be multiplication and division involved in solving for Q, so let's reverse the proportion; that is, 15/3 = Q/5. Now all we have to do is multiply each side of the proportion by 5, or 15 × 5/3 = Q = 25 items per day.

EXAMPLE Determine the height of an object — such as a tree that has to be removed — when you're unable to measure the object.

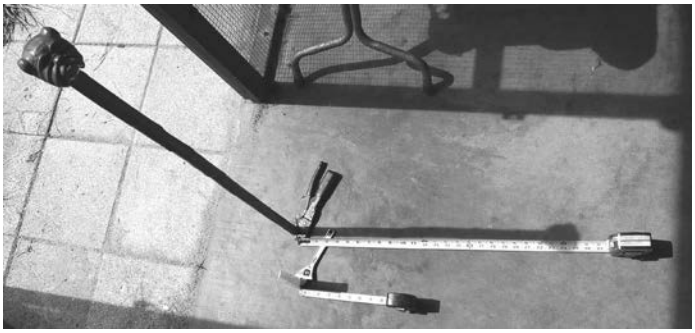

Figure 16-8
Using shadows to determine height

SOLUTION Measure the length of the shadow cast by a tall object, as well as the length of the shadow cast by an object of known length, such as a yardstick or 12-inch scale. Then solve the ratio and proportion: Object Height/Measuring Stick Height = Object Shadow Length/Measuring Stick Shadow Length, where Object Height is the only unknown quantity. The concept is shown in Figure 16-8 where the shadow cast by the walking stick is approximately 25 inches and the shadow cast by the 6-inch rule is about 4.2 inches.

Substituting the known measurements into the equation, we have T/6 inches = 25 inches/4.2 inches. Solving for T by multiplying each side of the equation by 6, we get 35.7 inches for the height of the walking stick.

Be careful when using proportions. In all of the examples above, we had what's called a direct proportion. In the first example, as the size of the total group increased, the number of females in the group also increased. In the second example, as the crew was increased in size, the production also increased. In the third example, as the length of object height increased, the length of its shadow increased.

But there are many situations when you'll have to solve an inverse proportion problem. For example, a 3-man crew takes 15 crew hours to complete a project. How much time will it take to do the project using a 5-man crew? This is an inverse proportion because, as the number of crew increases, the time required to finish the work decreases. If we had used the proportion above, we'd be looking 25 hours to do the project, and this is obviously incorrect. Instead, we have to set up the proportion inversely, or 15/5 = Q/3, where Q is the time require for the larger crew to complete the project.

To solve for Q, we multiply each side of the proportion equation by 3 and get 3 × (15/5) = Q or 45/5 = Q, so Q = 9. Another way of solving the problem is to express the equation in terms of manhours of work needed to complete the given task. In this case, It takes 3 × 15 = 45 manhours of work. Using a five-man crew, it would take 15/5 = 9 crew hours.

Combining Crews Working at Different Rates

In the crew problems given above, it was assumed that all crew personnel worked at the same rate of speed, and thus, had identical production rates. This is rarely the case in the real world.

EXAMPLE Jim can construct a given item in 5 minutes, but it takes David 6 minutes to construct the same item. How many of these items can they construct if they're working together?

SOLUTION We'll start by figuring out how many items each man can construct in an hour. Jim can make 60 minutes ÷ 5 minutes = 12 items per hour and David can make 60 minutes ÷ 6 minutes = 10 items per hour. Combining their efforts, they can construct 22 items per hour.

Multiplying Negative Numbers

A positive number multiplied by a negative number will result in a negative number. For example, if you make two car payments at $222, you've

made a total of $444 in payments, but your bank account shrinks by that same amount, or 2 × −$222 = −$444.

EXAMPLE A submarine is 100 feet below the surface (−100 feet). How deep is the sub if it dives to twice that depth?

SOLUTION The sub is now at 2 × (−100 feet) = −200 feet beneath the surface.

A negative number multiplied by a negative number will result in a positive number. An estimator friend of mine once told me he'd asked his algebra teacher why a negative number multiplied by a negative number resulted in a positive number and the teacher couldn't answer the question. I can understand the quandary the teacher faced, because it's not easy to explain. The explanation comes down to a "an accountant's way of thinking," and the best example I can come up with is this: Let's say you're making payments for one year on a car to the tune of $222 each month, and a kind relative sends you enough money to make four of your payments. That makes four fewer months (−4) of payments (−$222) you have to make, or −4 × −$222 = a positive $888 that you'll come out ahead. Multiplying two negative numbers and getting a positive number is one rule that's just good to memorize.

The Pythagorean Theorem

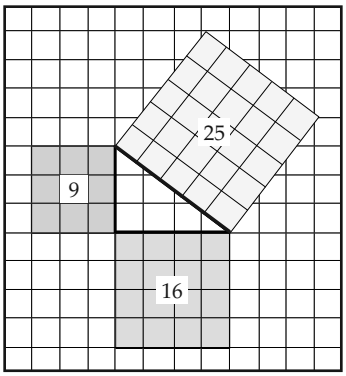

Figure 16-9
The Pythagorean Theorem

Pythagoras was a 5th-century B.C. Greek philosopher, mathematician, astronomer and musician who's credited for introducing one of the most useful formulas in mathematics — the Pythagorean Theorem. The theorem says that the square of the length of the hypotenuse (the long side) of a *right* triangle is equal to the sum of the squares of the lengths of the other two sides. See Figure 16-9. In other words, if you make a square out of the hypotenuse, the area of that square will be equal to the combined areas made from the squares of the other two sides. In this example, 9 + 16 = 25. But mathematicians are lazy, and we like to impress our friends, so we write this equation as shown in Figure 16-10.

$$c^2 = a^2 + b^2$$

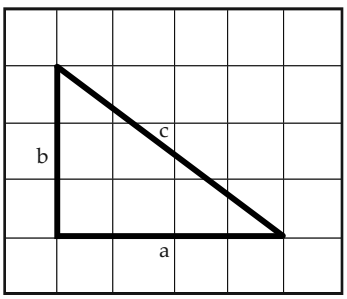

Figure 16-10
The Pythagorean Theorem formula

But to find the most useful part of the equation, we'll use the Golden Rule of Equations and take the square root of both sides of the equation:

$$\text{square root of } c^2 = \text{square root of } a^2 + b^2$$

$$\sqrt{c^2} = \sqrt{a^2 + b^2}$$

This gives us a very powerful tool:

c = square root of [(a squared) + (b squared)], or

$$c = \sqrt{a^2 + b^2}$$

EXAMPLE Assuming one 3-foot gate, determine the total length of fence required for the lot shown in Figure 16-11.

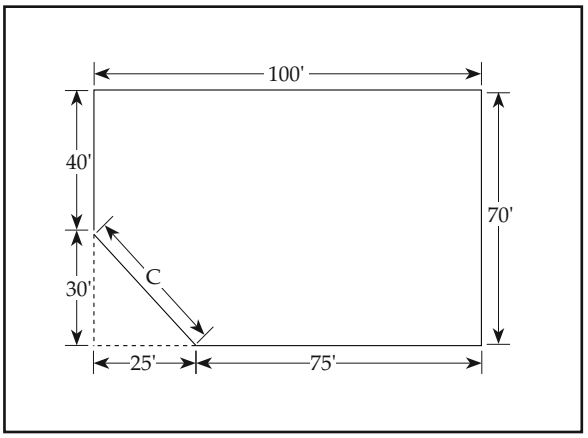

Figure 16-11
Pythagorean Theorem example

SOLUTION Let's start by adding the known dimensions given in the drawing. We have 40 feet + 100 feet + 70 feet + 75 feet = 285 feet. Once we deduct 3 feet for the gate, we have 285 feet – 3 feet = 282 feet. To solve for the dimension C in the lower left-hand corner, we'll use the Pythagorean Theorem, c = square root of [(a squared) + (b squared)].

Since the legs of the right triangle are 25 feet and 30 feet, $a^2 + b^2 = 252 + 302$, or 625 + 900 = 1,525. So c = the square root of 1,525 = 39.1 feet, or 39 feet. We have a total fence length of 282 feet + 39 feet = 321 feet.

Now let's look at something that you've probably studied before, and have even solved problems using it. I'm talking about the *square root*. Have you ever thought about the fact that when you take the square root of a number, you're simply figuring out the length of each side of a square whose area is equal to the area of the original number? Look at the Pythagorean Theorem drawing above. The square root of 9 (area) is 3 (side length), and the square root of 16 is 4 and the square root of 25 is 5. Also, when you take the *cube root* of a number, you're figuring out the length of each side of a cube whose volume is the original number. For example, the cube root of 8 is 2. That is, the volume of a cube 2 inches × 2 inches × 2 inches is 8 cubic inches.

Optimum (Least Expensive) Fence

There are occasions when you'll want to determine the shortest length of fence required to enclose an area. To enclose a four-sided area, a square will always require the shortest length of fence to install. The length of each side will be the square root of the area enclosed and the total length of fence will be equal to 4 times the length of each side. Without proving this, let's look at an example. If you enclose an area of 1,600 square feet, the shortest length of each side of the area is equal to the square root of 1,600, which is 40 feet per side, resulting in a total fence length of 4 × 40 ft. = 160 feet. Checking our answer, the area is 40 ft. × 40 ft. = 1,600 sq. ft.

It's a little more difficult for a three-sided area. In this situation, the width of the area is equal to the square root of half the area enclosed and the length is equal to the total area divided by the width. This will result in a total fence length of the length plus 2 times the width. For example, if you're required to enclose an area of 10,000 square feet next to a river, where no fence is required, the short side of the area is equal to the square root of 5,000 sq. ft. = 71 feet. The length of the long side of the area is 10,000 sq. ft. divided by 71 ft. = 141 feet, for a total fence length of 2 × 71 ft. +141 ft. = 425 feet.

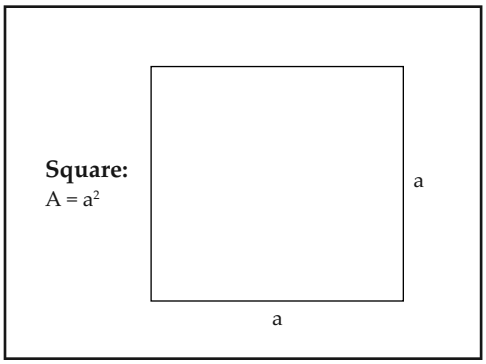

Figure 16-12
Area of a square

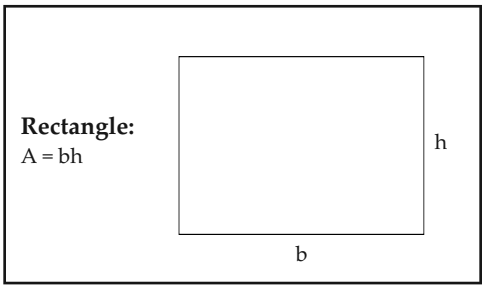

Figure 16-13
Area of a rectangle

> ***Any time you square a number*** ending in 5, multiply the first number by one bigger and place 25 at the end of that result. For example, when multiplying 35 × 35, multiply 3 × 4 to get 12, and then place 25 at the end of the number for 1,225. As another example, 45 × 45 = 4 × 5 = 20. Placing 25 at the end gives us 2,025.

Checking our answer, the area is 71 ft. × 141 ft. = 10,011 sq. ft. The error was caused by a rounding error when we used the square root to work the problem.

Working With Plane Figures

A plane figure is simply a figure drawn on a flat surface. We'll discuss squares, rectangles, triangles, parallelograms, trapezoids and circles.

Squares

A square is a four-sided figure with four square corners, with all sides of equal length. See Figure 16-12.

EXAMPLE Determine the area of a square with each side 35 feet.

SOLUTION The area is 35 feet × 35 feet = 1,225 sq. ft.

Rectangles

A rectangle is a four-sided figure with four square corners, making opposite sides parallel and equal in length. The area of a rectangle is the length of the base times the length of the height. See Figure 16-13.

EXAMPLE Determine the area of a rectangle if the base is 60 feet and the height is 45 feet.

SOLUTION The area is 60 feet × 45 feet = 2,700 sq. ft.

EXAMPLE If a rectangle has an area of 250 sq. ft. and the base is 20 feet, what's the height of the rectangle?

SOLUTION Area = Base × Height, or 250 sq. ft. = 20 × h. Recalling our algebra lesson and solving for h, we have h = 250 ÷ 20 = 12.5 feet.

EXAMPLE What fence and slab is less expensive to build? One built as a square, 40 feet × 40 feet, or one built as a rectangle, 20 feet × 80 feet?

SOLUTION Each fence encloses an area of 1,600 sq. ft., so the slab costs will be the same in either case; but now, let's look at the perimeters. The square has a perimeter of 4 × 40 feet = 160 linear feet, but the perimeter of the rectangle is (2 × 20 feet) = (2 × 80 feet) = 40 feet + 160 feet = 200 linear feet.

It's obvious that the square is the less expensive structure because it would require 40 less feet of fence. Also, the square slab would require fewer feet of edge forms, making it less expensive than the rectangular one.

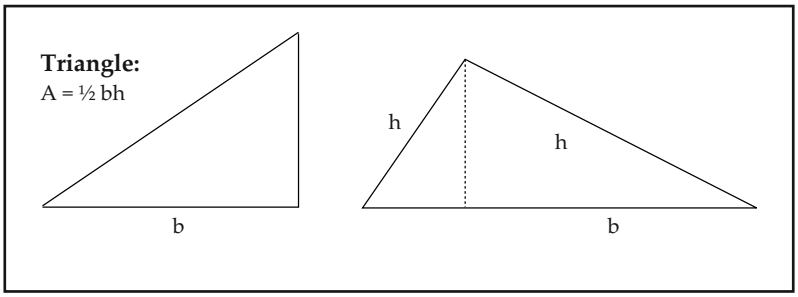

Figure 16-14
Area of a triangle

Triangles

A triangle is a three-sided figure with three angles whose sum is 180 degrees. Look back at the drawing of the rectangle in Figure 16-13 and you'll see that the area is the base times the height. Draw a diagonal line from one corner to the opposite corner. Now you have two triangles. What is the area of each one? You're right. It's ½ times the base times the height (or altitude). See Figure 16-14.

EXAMPLE What's the area of a triangle with a base of 80 feet and an altitude of 40 feet?

SOLUTION The area is ½ × 80 feet × 40 feet = 1,600 sq. ft.

Parallelograms

A parallelogram is a four-sided figure whose opposite sides are parallel, but not at right angles to the base. The formula for the area of a parallelogram is identical to that used for a rectangle. See Figure 16-15.

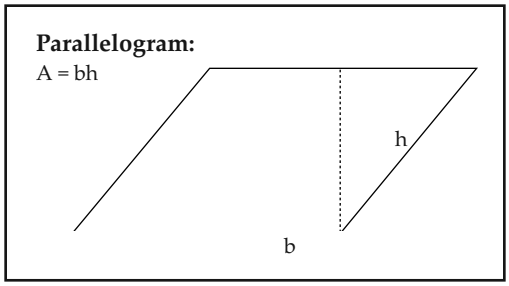

Figure 16-15
Area of a parallelogram

Trapezoids

A trapezoid is a four-sided figure with only two opposite sides parallel. The area of a trapezoid is equal to the average lengths of the parallel sides, multiplied by the perpendicular distance between them. See Figure 16-16.

EXAMPLE Determine the area of a trapezoid whose parallel lines are 20 feet and 30 feet, respectively, if the distance between them (the altitude) is 15 feet.

SOLUTION The average length of the parallel sides is (20 feet + 30 feet) ÷ 2 = 25 feet. So the area is 25 feet × 15 feet = 375 sq. ft.

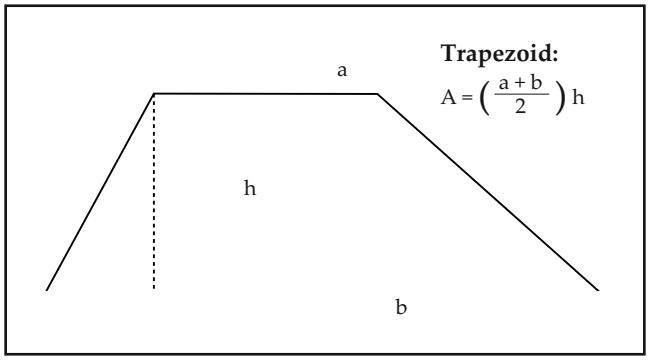

Figure 16-16
Area of a trapezoid

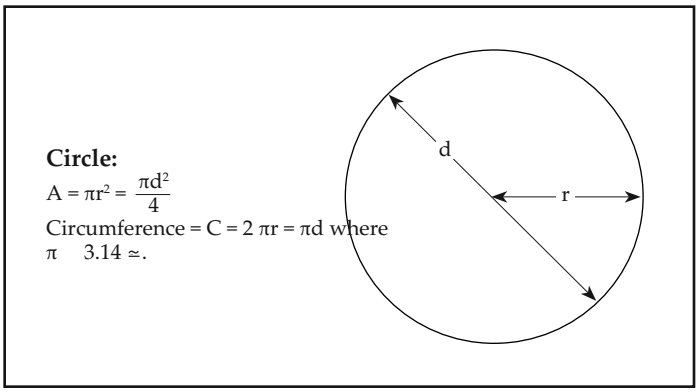

Figure 16-17
Area and circumference of a circle

Circles

Now that we're on the subject, let's look at some circle problems. Usually, you have to find the area or the perimeter of a circle. The perimeter is the distance around the circle. You need to memorize the formulas used to solve either problem. The area of a circle is π (pi) × radius^2 (radius squared). The Greek symbol, pi (pronounced "pie"), is approximately equal to 3.14. In reality, no one has ever found the exact value for pi; that is, the numbers to the right of the decimal go on forever. Radius is usually designated as "r," so the equation is Area = $\pi \times r^2$. See Figure 16-17. The formula is usually expressed as "pi r squared."

EXAMPLE Find the area of a circle with a diameter of 10 feet.

SOLUTION Since the radius is half the diameter, the radius is 5 feet, so the area is:

$$A = 3.14 \times 5 \text{ feet} \times 5 \text{ feet} = 78.5 \text{ sq. ft.}$$

We're doing so well, let's do another problem:

EXAMPLE How does the area of a circle compare with a square whose sides are equal to the diameter of the circle?

SOLUTION The area of the square is 10 feet × 10 feet = 100 sq. ft. and the area of a circle that fits inside the square is 78.5 sq. ft., so the area of the circle is 78.5 ÷ 100 = 0.785 = 78.5 percent. That is, the area of the circle is only 78.5 percent as big as the area of the square. Make this comparison with other sizes of squares and circles and you'll find that the percentage will always be the same. The circumference (or perimeter) of a circle is equal to pi times the diameter of the circle, or $C = \pi \times D = 3.14 \times D$.

EXAMPLE Find the circumference of the circle given in the previous example.

SOLUTION When you have a circle with a diameter of 10 feet, the circumference is:

$$C = 3.14 \times 10 \text{ feet} = 31.4 \text{ feet}$$

Please review one of the examples given previously in the rectangle portion of this chapter before solving the next example.

EXAMPLE Assuming the fence you're building can be wrapped into a circle with no extra posts or bending. Which fence is less expensive to build? The 40 foot × 40 foot square, or a circle enclosing 1,600 sq. ft.?

SOLUTION The area of a circle is 3.14 (pi) × radius^2. Recalling our algebra lesson, and solving for the radius, for this 1,600 sq. ft. circle, we have radius^2 = 1,600 ÷ 3.14 = 509.6, so the radius is the square root of 509.6, which is 22.57 feet. Then the diameter is 2 × 22.57 feet = 45.14 feet. The circumference of this circle (or length of fence) is 3.14 × 45.14 feet = 141.7, or 142 feet. Since the perimeter of the square structure is 4 × 40 feet = 160 feet, the circular structure will require 160 ft. – 142 ft. = 18 fewer feet of material than the square structure. (See Figure 16-17.)

Surface Areas

All we have to do to determine the surface area of a solid is determine the area of each side of the solid and add them together. The surface area in Figure 16-18 is:

$$\text{Surface area} = (2 \times A) + (2 \times B) + (2 \times C), \text{ or } 2 \times (A + B + C)$$

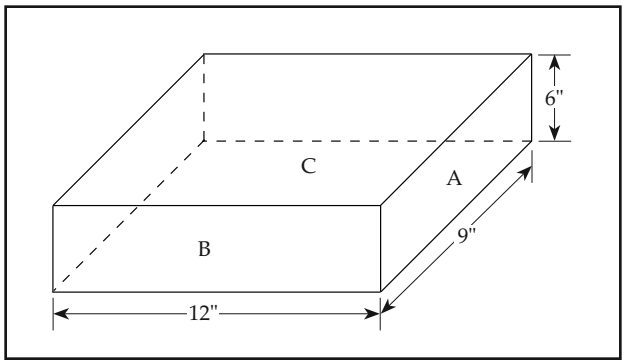

Figure 16-18
Surface area of a box

EXAMPLE Determine the square-foot surface area of the solid shown in Figure 16-18.

SOLUTION:

Area A = 6 inches × 9 in. = 54 square in.
Area B = 6 inches × 12 in. = 72 square in.
Area C = 9 inches × 12 in. = 108 square in.

Adding these, we get 54 + 72 + 108 = 234 square inches; but, since each area shows up twice on the solid, we have a total surface area of 2 × 234 square inches = 468 square inches. Since a square foot is 144 square inches (12 inches × 12 inches), the surface area is 468 ÷ 144 = 3.25 sq. ft.

EXAMPLE The fence shown in Figure 16-19 must be painted on both sides. What is the total area of fence that must be painted?

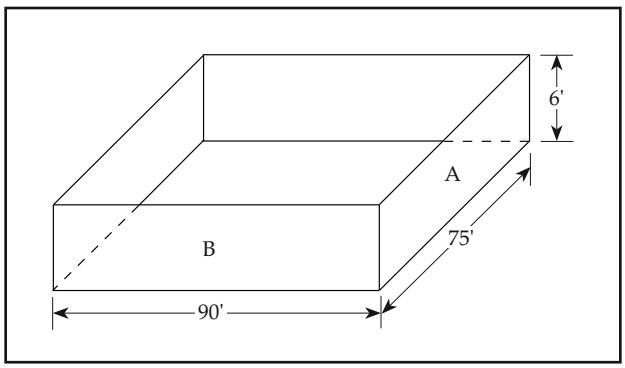

Figure 16-19
Surface area of a fence

SOLUTION:
Area A = 6 feet × 75 feet = 450 sq. ft.
Area B = 6 feet × 90 feet = 540 sq. ft.

Since there are two of Area A and two of Area B, the total area is (2 × 450 sq. ft.) + (2 × 540 sq. ft.) = 900 sq. ft. + 1,080 sq. ft. = 1,980 square feet. Don't be that contractor who only charges for painting the fence on one side! That's how you go broke in a hurry.

Surface Areas of Posts

Since you sometimes have to paint or waterproof fence posts, we need to discuss the surface areas of a square post and a round post.

Square Posts

The surface area of a square post is the girth of the post times the height of the post, or

$$SA\ (surface\ area) = 4 \times Post\ Width \times Post\ Height$$

EXAMPLE Determine the surface area of a 4 × 4 post 8 feet long.

SOLUTION Since the post is actually $3^1/_2$ inches × $3^1/_2$ inches, the girth is 4 × 3.5 inches = 14 inches ÷ 12 = 1.17 feet. So, the surface area is 1.17 feet × 8 feet = 9.36 sq. ft.

Round Posts

The surface area of a round post is the circumference of the post multiplied by the length of the post.

EXAMPLE Determine the surface area of a 4-inch diameter post 8 feet long.

SOLUTION The circumference of the post is 3.14 × 4 inches = 12.56 inches ÷ 12 = 1.05 feet, so the surface area is 1.05 feet × 8 feet = 8.4 sq. ft.

Travel Time

Travel time usually varies, depending mainly on the traffic, number of stop lights and the speed limit. To determine total travel time, you have to determine the time along each unique section of the road.

EXAMPLE How long will your trip take if your route and miles per hour is as follows: 20 miles at an average of 55 mph, 6 miles at 40 mph, and 5 miles at 20 mph?

SOLUTION The time required to drive the high-speed section is 20 miles ÷ 55 mph = 0.36 hours. The time required to drive the medium-speed section is 6 miles ÷ 40 mph = 0.15 hours, and the time required to drive the slow-speed

section is 5 ÷ 20 mph = 0.25 hours. So the total time required to make the entire trip is 0.36 hr. + 0.15 hr. + 0.25 hr. = 0.76 hours × 60 (the number of minutes in an hour) = 45.6 minutes.

Centering a Structure

To center an object, such as a gate, subtract the width of the gate from the total fence length, then divide by two.

EXAMPLE You have to place a 6-foot gate at the center of a fence 60 feet long. What is the length of fence that you'll build on each side of the gate?

SOLUTION The length of fence, excluding the width of the gate, will be 60 feet – 6 feet = 54 feet. Since half of this total length will be installed on each side of the gate, each fence will be 54 feet ÷ 2 = 27 feet.

If there were two 6-foot gates to be installed, we'd subtract the widths of both gates from the total fence length, then divide by three. Installing two 6-foot gates in the 60-foot fence in the previous example, we'd have 60 feet – (2 × 6 feet) = 48 feet of fence. Dividing by 3, we'd have 48 feet ÷ 3 = 16-feet segments of fence.

Fence Picket and Board Spacing

To avoid cutting the last board on a fence run, the correct spacing between the boards must be appropriate for the fence length. The correct spacing between the boards depends on the fence length, the board width, and the spacing between the boards. Remember, there will be one less space between boards than the number of boards required. The number of boards required is the fence length, divided by the sum of the board width plus the desired gap between the boards. Since we desire to avoid cutting (ripping) the last board, it is convenient to adjust the spacing between boards after making a preliminary calculation of the number of boards required, as is done in the following example.

EXAMPLE The fence length is 96 feet 3 inches, with standard 1 x 12 board widths of 11¼ inches and a desired (preliminary or trial) gap of 1¼ inches between boards. How many boards will you need?

SOLUTION We'll start by converting the fence length into inches, since all of the other dimensions given are in inches. The fence is 96.25 feet × 12 = 1,155 inches long. The number of boards required is 1,155 inches ÷ (11.25 inches + 1.25 inches) = 1,155 inches ÷ 12.5 inches = 92.4 boards. Since we wish to avoid cutting a fence board, we will adjust the spacing to use 92 boards. The number of spaces between boards is 92 Ea. – 1 = 91 spaces. So the correct (adjusted) gap between

Fraction of an inch	Decimal	64ths of an inch
1/32	0.03125	2
1/16	0.0625	4
3/32	0.09375	6
1/8	0.125	8
5/32	0.15625	10
3/16	0.1875	12
7/32	0.21875	14
1/4	0.25	16
9/32	0.28125	18
5/16	0.3125	20
11/32	0.34375	22
3/8	0.375	24
13/32	0.40625	26
7/16	0.4375	28
15/32	0.46875	30
1/2	0.5	32
17/32	0.53125	34
9/16	0.5625	36
19/32	0.59375	38
5/8	0.625	40
21/32	0.65625	42
11/16	0.6875	44
23/32	0.71875	46
3/4	0.75	48
25/32	0.78125	50
13/16	0.8125	52
27/32	0.84375	54
7/8	0.875	56
29/32	0.90625	58
15/16	0.9375	60
31/32	0.96875	62
1.0	1	64

Figure 16-20
Fractions of inches converted to decimals

boards is [1,155 inches – (92 × 11.25 inches)] ÷ 91 = [1,155 inches – 1,035 inches] ÷ 91 = 120 inches ÷ 91 = 1.319 inches. Referring to Figure 16-20, the spacing between the boards should be around $1\frac{5}{16}$ inches, or $\frac{1}{16}$ inch wider than the original design spacing. If you have a calculator handy, it may be more convenient to multiply the decimal 0.319 × 16 to obtain the number of sixteenths of an inch, and then add one inch to readily determine that 1.319 inches = approximately $1\frac{5}{16}$ inches.

Working With Volumes of Solids

I'll show you what these solids look like and give you the equations used to determine their volumes, along with some practical examples. See Figure 16-21.

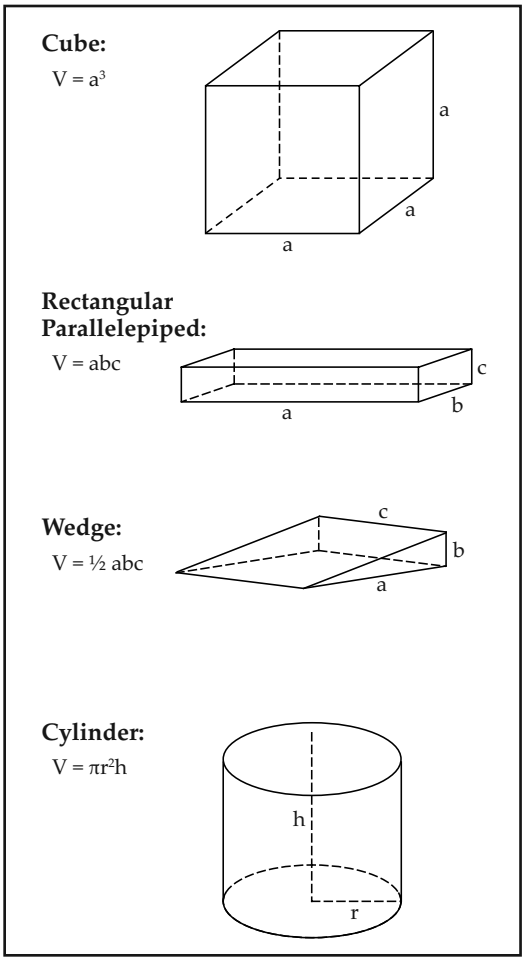

Figure 16-21
Volumes of common solids

Parallelepipeds

The volume of a parallelepiped is equal to the length × width × depth of the solid.

EXAMPLE What is the volume of clean topsoil required for a planter box 20 feet long, 10 feet wide and 3 feet deep?

SOLUTION The volume is 20 ft. × 10 ft. × 3 ft. = 600 cubic feet. Since there are 27 cubic feet per cubic yard, we'll require 600 cu. ft. ÷ 27 = 22.2 cubic yards of fill.

Wedges

The volume of a wedge is $^1/_2$ × the length of the solid × the width of the solid × the depth of the solid.

EXAMPLE What is the volume of a wedge of fill dirt placed at the bottom of one side of a fence if the fence is 200 feet long, the fill is 10 feet wide and the fill depth at the fence is 6 inches?

SOLUTION The volume is $^1/_2$ × 200 ft. × 10 ft × 0.5 ft. = 500 cubic feet. This is 500 cu. ft. ÷ 27 = 18.5 cubic yards.

Cylinders

The volume of a cylinder is the end area of the cylinder (the area of a circle) times the height of the cylinder, or V (volume) = pi × r^2 × H, where H is the height of the cylinder.

EXAMPLE What is the cubic foot volume of earth excavated for a fence post if the hole is 8 inches in diameter and 30 inches deep?

SOLUTION We'll start by converting the dimensions to feet by dividing each one by 12 (the number of inches in a foot). Since the diameter is 8 inches, the radius of the hole is 4 inches, so that's 4 inches ÷ 12 (inches per foot) = 0.33 feet, and the depth is 30 inches ÷ 12 (inches per foot) = 2.5 feet. So, the volume of the hole is V = 3.14 × .33 feet × .33 feet × 2.5 feet = 0.85 cubic feet.

EXAMPLE How many of the holes given in the example will one cubic yard of concrete fill?

SOLUTION A cubic yard of concrete is 27 cubic feet, so a cubic yard of concrete will fill 27 cu. ft. ÷ 0.85 cu. ft. = 31.7, or 32 holes.

Figure 16-22
A centimeter

Working with the Metric System

The word *metric* comes from the Greek word *metron*, which means "measure." The metric system was first proposed in 1791, during the French Revolution. Prior to this, each country had its own standard units for length, area and weight. Merchants and scientists realized that a uniform system was needed. Between 1850 and 1900, the metric system was adopted throughout continental Europe and Latin America, and in 1875, the Treaty of the Meter was signed by the leading industrial countries, including the United States, establishing what is now called the International System of Units.

The Earth was used as the first measuring stick, with a meter defined to be one ten-millionth of the distance from the equator to the North Pole. All of the metric units are based on powers of 10, and each unit has a unique prefix. *Milli* is used to designate $1/1{,}000$, *centi* designates $1/100$, *deci* designates $1/10$, *deca* designates 10, *hecto* designates 100 and *kilo* designates 1,000. Let's use the meter as an example unit. One millimeter is $1/1{,}000$ of a meter, one centimeter is $1/100$ of a meter (or 10 millimeters), and a decimeter is $1/10$ of a meter (or 100 millimeters). One decameter is equal to 10 meters, one hectometer is equal to 100 meters (or 10 decameters), and a kilometer is equal to 1,000 meters.

Metric "Yardsticks"

One meter (m) is about one yard long (approximately 39.37 inches). A decimeter (dm) is almost 4 inches long, a centimeter (cm) is about the width of the smaller dimension of the oval on a class ring (See Figure 16-22) and a millimeter (mm) is approximately the thickness of a dime. A CD is 120 mm in diameter and the hole is 15 mm in diameter.

A kilogram (kg) is about 2.2 pounds and a metal paperclip weighs approximately one gram (g). A penny weighs about 2.5 grams and a nickel weighs about 5 grams.

One strange sounding metric measurement is the hectare. A hectare is an area enclosing 10,000 square meters. You may have seen this before — it's the size of some soccer fields. One acre is approximately 4,000 square meters.

One cup is about 250 milliliters (ml), and a teaspoon is equal to 5 milliliters.

Working With Metric Scales

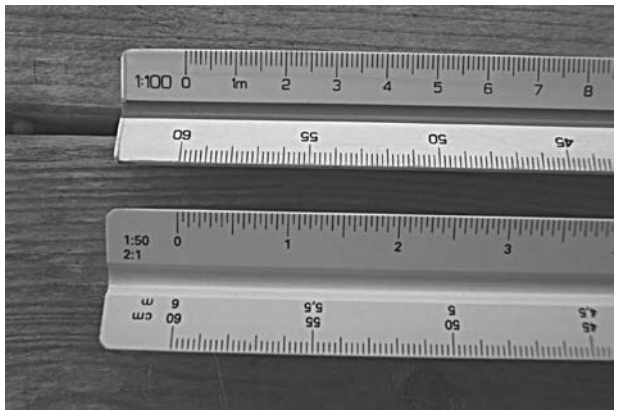

Figure 16-23
Metric scales

If the U.S. ever switches over to a metric plan, about the only dimensions you'll be dealing with will be length measurements. Using a metric scale to do a takeoff might seem confusing, so here's an explanation. If you look at the metric scales in Figure 16-23, you see that the scale is divided into millimeters and centimeters (shown bold on the scale). Let's assume we have a metric plan drawn at a 1:100 scale. This means that a meter measured on the plan (or scale) is equivalent to 100 meters in the field. Another way of looking at this is that 1 millimeter on the plan is equivalent to 100 mm in the field, and one cm on the plan is equivalent to 100 cm in the field. But, since 100 cm is equal to a meter, one cm on the plan is equal to 1 meter in the field, so each cm shown in Figure 16-23 represents one meter. For a 1:50 metric scale, one cm is equivalent to 50 cm in the field, or 50 meters in the field. Two centimeters on the plan is the same as 100 meters in the field.

Will the metric system ever be the system of measurement in the U.S? To a certain extent, the system is already here and, in some cases, it's been helpful. For example, there are scores of bolt sizes available in the English system, but only a few needed in the metric system.

The biggest problem when working with the metric system is when we try to interface the English system with the metric system. When this happens, we have to convert one unit to another. Figures 16-24 and 16-25 show conversion factors for both systems. Use data in Figure 16-26 to solve the following problems. In these problems, "/" is read as "per." For example, 12 inches/ft. is read as 12 inches per foot.

EXAMPLE Convert one foot into centimeters.

SOLUTION Do you recall studying conversion factors earlier in this chapter? We'll have to use them now. Knowing that there are 2.54 cm in an inch, we convert by: 1 foot × 12 in./ft. × 2.54 cm/in. = 30.48 centimeters.

EXAMPLE How long is a football field in meters?

SOLUTION 100 yd. × 0.9144 m/yd. = 91.44 meters

EXAMPLE Convert 750 feet into meters

SOLUTION 750 ft. × 0.3048 m/ft = 228.6 meters

EXAMPLE Convert 30 miles into kilometers

SOLUTION 30 mi. × 1.609 km/mi. = 48.27 kilometers

Table C-1: Conversion Factors — U.S. to Metric	
U.S. Unit	**Metric Equivalent**
Length	
mile (mi.) = 5,280 ft. = 1,760 yds.	1.609 km.
yard (yd.) = 3 ft. = 36 in.	0.9144 m.
foot (ft.) = 12 in.	0.3048 m. = 30.48 cm.
inch (in.)	2.54 cm.
Area	
square mile (sq. mi.) = 640 acres	2.59 sq. km.
acre (a) = 4,840 sq. yds.	4,047 sq. m.
square yard (sq. yd.) = 9 sq. ft.	0.836 sq. m.
square foot (sq. ft.) = 144 sq. in.	0.093 sq. m.
square inch (sq. in.)	6.451 sq. cm.
square (SQ) = 100 sq. ft.	9.29 sq. m.
Volume (cubic)	
cubic yard (cu. yd. or C.Y.) = 27 cu. ft.	0.765 cu. m.
cubic foot (cu. ft.) = 1,728 cu. in.	0.028 cu. m.
cubic inch (cu. in.)	16.387 cu. cm.
board foot (B.F.) = 0.083 cu. ft. = 144 cu. in.	2,360 cu. cm.
Capacity (liquid)	
gallon (gal.) = 4 qts. = 0.134 cu. ft.	3.785 l.
quart (qt.) = 2 pts. = 57.75 cu. in.	0.946 l.
pint (pt.)	0.473 l.
Weight	
short ton (ton) = 2,000 lbs. = 20 cwt.	0.907 metric tons
short hundredweight (cwt.) = 100 lbs.	45.359 kg.
pound (lb.) = 16 oz.	0.454 kg. = 453.59 g.
ounce (oz.)	28.349 g.
Density	
pounds per cubic yard	0.5929 kg/cu. m.
density (H_2O) = 8.345 lbs./gal. = 62.428 lbs./cu. ft.	1.0 kg/l.
Pressure	
pounds per sq. ft. (psf)	0.04783 kilopascals
pounds per sq. in. (psi)	6.8951 kilopascals

Figure 16-24
Converting imperial to metric

EXAMPLE Convert 22 gallons into liters

SOLUTION 22 gal. × 3.785 l/gal. = 83.27 liters

EXAMPLE Convert 180 pounds to kilograms

SOLUTION 180 lb. × 0.484 kg/lb. = 87.12 kilograms

You can also refer to Figure 16-26 to convert inches to decimal equivalents of feet and meters.

Table C-2: Conversion Factors — Metric to U.S.	
Metric Unit	**Approximate U.S. Equivalent**
Length	
kilometer (km.) = 1,000 m.	0.62 mi.
meter (m.) = 0.001 km. = 100 cm. = 1,000 mm.	3.28 ft. = 39.37 in.
centimeter (cm.) = 0.01 m. = 10 mm.	0.39 in.
millimeter (mm.) = 0.001 m.	0.039 in.
Area	
square kilometer (sq. km.)	0.3861 sq. mi.
square meter (sq. m.)	1.196 sq. yds. = 10.76 sq. ft.
square centimeter (sq. cm.)	0.155 sq. in.
Volume (cubic)	
cubic meter (cu. m.)	1.31 cu. yds. = 35.37 cu. ft.
Capacity (liquid)	
kiloliter (kl.) = 1,000 l.	35.37 cu. ft.
liter (l.) = 0.001 kl. = 1,000 ml.	1.057 qt. = 61.02 cu. in.
milliliter (ml.) = 0.001 l. = 1 cu. cm.	0.06 cu. in.
Weight (mass)	
metric ton (MT) = 1,000 kg.	1.1 tons = 2,204.62 lbs.
kilogram (kg.) = 1,000 g.	2.2046 lbs. = 35.37 oz.
gram (g.) = 0.001 kg.	0.035 oz.
Density	
kilograms per cubic meter	1.687 lbs./cu. yd.
Pressure	
kilopascal	20.91 psf = 0.145 psi

Figure 16-25
Converting metric to imperial

Converting Inches to Feet and Meters		
Inches	**Approximate Decimal Equivalent (Feet)**	**Approximate Metric Equivalent (Meters)**
1/8	0.01	0.003
1/4	0.02	0.006
1/2	0.04	0.013
1	0.08	0.025
1-1/2	0.13	0.038
2	0.17	0.051
2-1/2	0.21	0.064
3	0.25	0.076
3-1/2	0.29	0.089
4	0.33 or 0.34*	0.102
4-1/2	0.38	0.114
5	0.42	0.127
5-1/2	0.46	0.140
6	0.50	0.152
6-1/2	0.54	0.165
7	0.58	0.178
7-1/2	0.63	0.191
8	0.67	0.203
8-1/2	0.71	0.216
9	0.75	0.229
9-1/2	0.79	0.241
10	0.83 or 0.84*	0.254
10-1/2	0.88	0.267
11	0.92	0.279
11-1/2	0.96	0.292
12	1.00	0.305

*For the sake of cautious estimating, I use the factors 0.34' and 0.84' for 4 inches and 10 inches, respectively. This results in quantities that are a bit long, but safe.

Figure 16-26
Converting inches to feet and meters

In Conclusion

Reflecting back on what you've learned from this book, I think you'll agree that reading it has improved your knowledge and skills, whether you're a homeowner wishing to build or repair your own fence, or a professional fence contractor, wishing to build the best quality work (within the client's budget) at a greater profit that lasts for years.

For the homeowner, it's given you knowledge about various types of fence materials available, the tools required, as well as the knowledge of how to correctly build your own fence.

For the contractor, it has increased your knowledge about correctly and efficiently building fences, gates and retaining walls that will pass inspection and last for years. You've also learned effective advertising, layout and design, improved salesmanship, efficient methods of estimating quantities and costs, job safety, fence repairs, how to install fence enhancements such as wiring and plumbing, the required business records and bookkeeping forms that will help your business survive, and the law regarding contracts and dealing with employees.

For aspiring contractors required to take and pass a state license exam, it has given you up-to-date information on building codes, as well as an in-depth discussion on math, starting with the basics and giving you tools to solve a multitude of practical problems quickly and more accurately.

It's been my pleasure to present the material in this book, knowing that it's been a benefit to so many.

This page left intentionally blank

Glossary

A

Abutment — Structure (natural or constructed) that supports a dam, bridge or arch.

Adobe — Clay building material made from straw and sun-dried earth or Playa Clay.

Adze — A tool used to shape wood; looks somewhat like a pickax with a chisel-shaped head.

Anta — Portion of a wall that is thicker than the rest and acts as a post.

Auger — Large, coarse screw bit, typically 8 to 12 inches in diameter and driven by an electric or gas motor; used for boring post holes.

Awl — Hand tool with long sharp pointed tip; used for making holes in wood or to make indent, starter hole, for a drill bit.

B

Backhoe — Power machine used for excavation; has digging bucket that is on the end of an articulating arm which is pulled toward the operator.

Balcony — Platform surrounded by railing — usually on upper stories of a building.

Bamboo — Tall grass with a woody stalk, usually about ⅛ to 1 inch in diameter and 8 to 12 feet tall; used for furniture and fences.

Band saw — Power saw with a continuous steel blade; used for cutting irregular shapes.

Banister — Railing used as a handhold on stairways and landings.

Barbed wire — Stranded wire with sharp-pointed ends twisted into it that protrude every 4 to 6 inches along its length.

Base — The bottom or supporting structure of a column or pier or wall; usually reinforced and wider than the object it supports.

Batten — Joint sealer or reinforcement made from narrow strips of wood; also the stakes used to hold the string that marks the boundary of a wall or foundation.

Block and tackle — A device that decreases the amount of power needed to move a given load.

Boss — Architectural term for portion of decorative ornamentation that protrudes outward.

Bow saw — A tensioned saw blade attached to an arched or bow-shaped handle; used for cutting logs.

Brace — To reinforce a fence or wall so it does not collapse or fall over; also, a hand tool used to drill holes in wood.

Bracket — Support for shelves or vertical loads, usually made of metal; also used to reinforce angles.

Brad — Thin, small-headed nail.

Brick — Clay formed and heat-cured into a basic building block.

Broach — To open up a hole or square off the bottom of a hole.

Brownstone — A reddish-brown sandstone building material.

C

Cantilever — Beam supported on one end only.

Cap — Top of wall, usually overhangs both sides of wall to deflect water away from wall.

Capillary action — Liquid flow through an object.

Cast iron — Molded iron manufactured from silicon, iron, and carbon. Used for decorative items.

Cattle gate — Bars installed over a hole at ground level; bar size and spacing allows people and vehicles to cross, but not cattle.

Cement — Building material used to bond materials, blocks, bricks, together; manufactured from finely-pulverized ores — usually iron oxide, alumina, lime, silica, and magnesia.

Center bit — A wood boring tool with a center screw that extends beyond two sharpened wings or spurs which shave the circumference of the hole.

Center punch — A tool you strike with a hammer to make an indent used as a starter hole for drilling.

Chain saw — Power saw used to cut timber, with a continuous revolving chain that has cutting teeth every few inches.

Chalkline — Straight line marked on an object or surface; also the device used to make the line (a roll of string enclosed in a box of powdered chalk).

Chamfer — The edge of a bevel; also a column with groves cut along its length, or the act of cutting groves along the length of a column.

Chisel — A hand tool struck with a hammer or pushed by hand, used to cut groves or irregular shapes from the surface of wood; special hardened chisels also cut or split block, brick, mortar, cement, or stone.

Chuck — The portion of a drill that is used to hold the bit.

Clapboard — Type of wood siding material that is wide at the top and narrower at the bottom.

Clasp — To hold together; also, an object designed to hold items together, such as a hook to keep a gate closed.

Clench — To bend the protruding pointed end of a nail so it can't be pulled out

Clinkerbuilt — Overlapping of boards, such as siding.

Cofferdam — Enclosure used to divert water from a construction area; a hollow, watertight structure lowered to the bottom of a water-filled area, and extending above water level which is then pumped out to expose the bottom surface.

Column — Vertical post used as a support.

Concrete — Building material made from a mixture of cement, small aggregate, and water, and used to form foundations and walls.

Console — Ornamental bracket for holding up a shelf or overhead.

Coping — The cap of a wall.

Coping saw — Small handheld bow saw with thin, narrow blade for cutting decorative strolls in wood.

Corbel — A support attached to the side of a wall — usually scroll-cut wood that supports a shelf.

D

Dado — A groove cut in any material; also, the blade used to cut the groove or the act of cutting the groove.

Dead-air space — The enclosed space in blocks where there is no air movement; acts as an insulator to heat and cold.

Dead load — Weight on foundation from wall or structure above, a constant weight that doesn't include people, vehicles, snow, etc. (see also *Live load*).

Die — Device used for cutting threads on screws and pipes.

Dovetail — Type of wood joint where each piece being joined is end-cut into sections that are wider at the ends than at the base.

Drawknife (Drawshave) — A knife blade with handles on both ends; the knife is drawn or pulled in a shaving motion across the piece of wood being shaped.

Dry wall — Rock wall construction in which no mortar is used; the roughness and weight of the stone hold the wall in place.

Duramen (Heartwood) — The center portion of a log which is dense, hard, and usually dark in color.

Dutch door or gate — Gate or door that is split horizontally with both sections independently hinged and locked, allowing the top half to open so a person can see out or talk to someone while the bottom half remains closed.

E

Eye bolt — Bolt formed with a head that forms a closed circle.

F

Face — The front portion of a wall or fence.

Filigree — Fine design ornamental work.

Footprint — Drafting term that refers to the horizontal area covered by an object being placed in that area; also, the outline of wall or fence looking from the top downward.

Footing — The enlarged base section of a foundation, used to distribute the weight of the structure being supported.

Frame — Structural supporting element of a wall or building.

G

Galvanize — Apply a zinc coating to metal to prevent rust and deterioration.

Gate — A passageway between two adjacent areas that are separated by a freestanding fence or wall.

Gate post — Posts on either side of a gate — one holds the hinges, the other the latch.

Girder — A structural component that extends horizontally and supports a vertical load.

Girth — Measurement of distance around an object.

Gouge — A narrow scoop-type chisel used for digging out wood.

Grade — The slope or elevation of the land from flat (horizontal).

Grate — Covering over an opening which consists of open mesh or bars (see *Cattle gate*).

Gravel — Pebbles or sand and rock mixture; rock size is generally less than an inch in diameter.

Ground plan — Plan or layout of where a structure will rest on a plot of land.

Groundwater — Water beneath the surface of the ground, such as an underwater stream or pool.

H

Hacksaw — Small bow saw used for cutting metals.

Half-timber — A structure, wall, or fence with exposed wood separated by plaster, masonry or concrete.

Hardhat — A reinforced safety helmet worn by construction workers to protect the wearer from falling objects.

Hasp — Two-component door or gate latch composed of a U-shaped fitting on one piece which passes through a slot in the other; usually secured with a padlock.

Header — Supporting structure placed above an opening such as a doorway, window, or gate.

Hedge — Fence or barrier of low plants, bushes or trees.

Hedgerow — Hedge lined up in a row that acts as a fence.

Heelpost — Hinged side of a gate post.

Hinge — Two-component device: One section is fixed in place and the other is allowed to turn or swivel on the first.

Hoist — A lifting device usually of block and tackle design used to lift heavy objects into place.

Hone — Stone made of fine, hard-packed grit used for sharpening knives, axes, etc.

I

Impost — Beginning of an arch or the portion of the wall or fence the arch rests on.

Incline — A slope.

Inorganic — Dirt and rock soil which is not the result of decomposed plants or animal matter.

Insoluble — Not capable of being dissolved.

Insulator — Material which restricts the flow of heat, cold, or electricity.

K

Kerf — A saw or knife cut.

Keystone — Wedge-shaped stone which is the last to be placed into the center top of an arch and locks the arch together.

Kiln — An oven used for drying clay, such as that used to manufacture brick; also, an oven used to dry fresh-cut (wet) lumber.

King post — The center vertical post of a truss.

L

Levee — Bank of earth used to contain water from a lake, stream, river, or ocean.

Line posts — Posts between the anchor or terminal posts in a fence.

Lintel — Beam above a window or doorway that supports the wall above.

Live load — Load a structure is designed to support, including animals, people and equipment.

Loop cap (eye top) — A cap for a line post with a loop for the top rail to pass through; used in chain link fencing.

Louvers — Slats arranged across an opening in such a way that air passes through, but rain or the view is fully or partially blocked.

M

Mason — One who builds with stone, brick, or block.

Matchboards — Lumber that, when put together, forms a tight fit, such as tongue and groove.

Maul — Hammer with a large, heavy head; used to drive stakes, wedges, etc.

Miter — Joint formed by two or more pieces that have been cut at an angle and butted together.

Moldboard — Forming lumber used when laying in concrete; also, the angle plow or blade of a bulldozer.

Molding — Finish lumber used to cover joints and cracks.

Mortar — Mixture of cement and sand used to bond block and bricks together.

Mortarboard — Handheld board, 18 inches square, used to hold mortar during the brick laying process.

N

Newel post — Starting post of a railing located at the head or foot of a stairway, or the center post of a circular stairway.

Niche — A recessed shelf area in a fence or wall.

O

Ornamental fence — Decorative fence usually made of wrought iron or aluminum.

P

Parcel — A small plot of land; a lot.

Peavey — A tool for manual handling of logs.

Pediment — A decorative structure over a gate or entryway.

Percolate — To pass through a material, such as water passing through a wall.

Pilaster — The terminal post of a block wall.

Pile driver — Machine used to drive piles into the bottom silt of a body of water.

Pile — Large diameter post sunk into the bottom of a body of water; used to hold up piers.

Plan view — A drawing showing a top-down view of an object or property.

Plate rail — Bottom horizontal railing of a fence which is fastened to a foundation.

Podium — The wall that forms the base or foundation of a fence.

Portal — An entrance.

Postern — A private entry or gate which is not the front or main gate.

Protractor — Drafting tool used to draw circles and arches that measures angles in degrees.

Pull or *pulley* — See *Block and tackle*.

Q

Quadrant — A quarter section of an area.

Quarter section — 160 acres of land bounded by a square of ½ mile on each side.

Quoin — The keystone of an arch or corner stone of a wall; usually larger and a different color than the wall.

R

Rail — The horizontal beam of a fence; the face boards are secured to the rails.

Railing — A low fence, under 4 feet high, used as a handhold on balconies.

Relief map (topographic) — A plan view map showing the elevations of a piece of property or area.

S

Scythe — A blade for cutting tall grass.

Seismic — Pertaining to earthquakes; also, metal holders that meet earthquake standards for construction.

Shot hole — Hole drilled into solid rock or compacted earth in which a dynamite charge is placed.

Sluice — Water channel or gate used to divert a stream around the work area.

Spandrel — Decorative arch built into an otherwise square entryway.

Stay — The vertical wires of a woven wire mesh; also the vertical wire(s) used to space and hold two or more strands of barbed wire.

Stile — A stairway or group of steps passing over a fence; also, a vertical cut in a post in which a face board is inserted.

Stockade — A type of wooden fence made up of 2-inch- or 3-inch-diameter poles or wide boards with rounded fronts.

Stull — Timber support used to hold back earth when digging a mine or trench.

T

Tamp — To compress and remove trapped air in earth or concrete using short sharp blows.

Tarp (tarpaulin) — Fabric (often canvas) or plastic protective covering.

Tensiometer — A gauge used to determine the amount of pull or tension on a wire fence during installation.

Terne — Alloy coating of 1 part tin to 4 parts lead; applied as a protection to metal.

Tracery — Ornamental wood- or metal-work of the Gothic period where fine intersecting lines form a pattern.

Transit — A surveying instrument for determining grades, elevations, and angles.

Trowel — A handheld tool used to apply mortar to block or brick.

V

Vault — A storage area built into a wall or fence to secure valuables; also, an arched ceiling or roof.

Veneer — A non-structural, decorative facing of block or brick.

W

Wet wall — A rock or stone wall constructed using cement or mortar as a bonding agent.

Wythe — One horizontal row of brick in a brick wall; also, the vertical seam of mortar between bricks in a wall.

Practical References for Builders

National Estimator Cloud

Generate professional construction estimates for all residential and commercial construction from your internet browser. Includes 10 Craftsman construction cost databases, over 40,000 labor and material costs for construction, in an easy-to-use format. Cost estimates are well-organized and thoroughly indexed to speed and simplify writing estimates for nearly any residential or light commercial construction project – new construction, improvement or repair. Convert the bid to an invoice – in either QuickBooks Desktop or QuickBooks Online. Access your estimates from anywhere and on any device with a Web browser. Monthly and one-time billing options available. Visit **https://craftsman-book.com/national-estimator-cloud** for more details.

Construction Contract Writer

Relying on a "one-size-fits-all" boilerplate construction contract to fit your jobs can be dangerous — almost as dangerous as a handshake agreement. Construction Contract Writer lets you draft a contract in minutes that precisely fits your needs and the particular job, and meets both state and federal requirements. You just answer a series of questions — like an interview — to construct a legal contract for each project you take on. Anticipate where disputes could arise and settle them in the contract before they happen. Include the warranty protection you intend, the payment schedule, and create subcontracts from the prime contract by just clicking a box. Includes a feedback button to an attorney on the Craftsman staff to help should you get stumped — No extra charge. **$199.95**. Download the Construction Contract Writer at: http://www.constructioncontractwriter.com

National Construction Estimator

Current building costs for residential, commercial, and industrial construction. Estimated prices for every common building material. Provides manhours, recommended crew, and gives the labor cost for installation. **672 pages, 8½ x 11, $97.50. Revised annually**

***eBook (PDF) also available;* $48.75 at** www.craftsman-book.com

Contractor's Guide to *QuickBooks* by Online Accounting

This book is designed to help a contractor, bookkeeper and their accountant set up and use QuickBooks Desktop specifically for the construction industry. No use re-inventing the wheel, we have used this system with contractors for over 30 years. It works and is now the national standard. By following the steps we outlined in the book you, too, can set up a good system for job costing as well as financial reporting. **156 pages, 8½ x 11, $68.50**

Electrical Blueprint Reading Revised eBook

Shows how to read and interpret electrical drawings, wiring diagrams, and specifications for constructing electrical systems. Shows how a typical lighting and power layout would appear on a plan, and explains what to do to execute the plan. Describes how to use a panelboard or heating schedule, and includes typical electrical specifications.

***Available only as an eBook (PDF);* $14.88 at** www.craftsman-book.com

How to Succeed With Your Own Construction Business

Everything you need to start your own construction business: setting up the paperwork, finding the jobs, advertising, using contracts, dealing with lenders, estimating, scheduling, finding and keeping good employees, keeping the books, and coping with success. If you're considering starting your own construction business, all the knowledge, tips, and blank forms you need are here. **336 pages, 8½ x 11, $28.50**

***eBook (PDF) also available,* $14.25 at** www.craftsman-book.com

Insurance Restoration Contracting: Startup to Success

Insurance restoration — the repair of buildings damaged by water, fire, smoke, storms, vandalism and other disasters — is an exciting field of construction that provides lucrative work that's immune to economic downturns. And, with insurance companies funding the repairs, your payment is virtually guaranteed. But this type of work requires special knowledge and equipment, and that's what you'll learn about in this book. It covers fire repairs and smoke damage, water losses and specialized drying methods, mold remediation, content restoration, even damage to mobile and manufactured homes. You'll also find information on equipment needs, training classes, estimating books and software, and how restoration leads to lucrative remodeling jobs. It covers all you need to know to start and succeed as the restoration contractor that both homeowners and insurance companies call on first for the best jobs. **640 pages, 8½ x 11, $69.00**

***Also available as an eBook (PDF),* $34.50 at** www.craftsman-book.com

Construction Forms for Contractors

This guide contains 78 practical forms, letters and checklists, guaranteed to help you streamline your office, organize your jobsites, gather and organize records and documents, keep a handle on your subs, reduce estimating errors, administer change orders and lien issues, monitor crew productivity, track your equipment use, and more. Includes accounting forms, change order forms, forms for customers, estimating forms, field work forms, HR forms, lien forms, office forms, bids and proposals, subcontracts, and more. All are also on the CD-ROM included, in Excel spreadsheets, as formatted Rich Text that you can fill out on your computer, and as PDFs. **360 pages, 8½ x 11, $48.50**

***Also available as an eBook (PDF),* $24.25 at** www.craftsman-book.com

Profits in Buying & Renovating Homes

Step-by-step instructions for selecting, repairing, improving, and selling highly profitable "fixer-uppers." Shows which price ranges offer the highest profit-to-investment ratios, which neighborhoods offer the best return, practical directions for repairs, and tips on dealing with buyers, sellers, and real estate agents. Shows you how to determine your profit before you buy, what "bargains" to avoid, and how to make simple, profitable, inexpensive upgrades. **304 pages, 8½ x 11, $24.75**

National Building Cost Manual

Square-foot costs for residential, commercial, industrial, military, schools, greenhouses, churches and farm buildings. Includes important variables that can make any building unique from a cost standpoint. Quickly work up a reliable budget estimate based on actual materials and design features, area, shape, wall height, number of floors, and support requirements. Now includes free download of Craftsman's easy-to-use software that calculates total in-place cost estimates or appraisals. Use the regional cost adjustment factors provided to tailor the estimate to any jobsite in the U.S. Then view, print, email or save the detailed PDF report as needed. **280 pages, 8½ x 11, $98.00. Revised annually**

***Also available as an eBook (PDF),* $49.00 at** www.craftsman-book.com

Construction Estimating Reference Data eBook

Provides the 300 most useful manhour tables for practically every item of construction. Labor requirements are listed for sitework, concrete work, masonry, steel, carpentry, thermal and moisture protection, doors and windows, finishes, mechanical and electrical. Each section details the work being estimated and gives appropriate crew size and equipment needed.

***Available only as an eBook (PDF);* $29.50 at** www.craftsman-book.com

National Repair & Remodeling Estimator

The complete pricing guide for dwelling reconstruction costs. Reliable, specific data you can apply on every repair and remodeling job. Up-to-date material costs and labor figures based on thousands of jobs across the country. Provides recommended crew sizes; average production rates; exact material, equipment, and labor costs; a total unit cost and a total price including overhead and profit. Separate listings for high- and low-volume builders, so prices shown are specific for any size business. Estimating tips specific to repair and remodeling work to make your bids complete, realistic, and profitable.
504 pages, 8½ x 11, $98.50. Revised annually

***Also available as an eBook (PDF)*, $49.25 at** www.craftsman-book.com

Wood-Frame House Construction

Step-by-step construction details, from the layout of the outer walls, excavation and formwork, to finish carpentry and painting. Packed with clear illustrations and explanations updated for modern construction methods. Everything you need to know about framing, roofing, siding, interior finishings, floor covering and stairs — your complete book of wood-frame homebuilding.
320 pages, 8½ x 11, $25.50. Revised edition

Paint Contractor's Manual

How to start and run a profitable paint contracting company: getting set up and organized to handle volume work, avoiding mistakes, getting maximum production from your crews and the most value from your advertising dollar. Shows how to estimate all prep and painting. Loaded with manhour estimates, sample forms, contracts, charts, tables and examples you can use.
224 pages, 8½ x 11, $46.50

***eBook (PDF) also available;* $23.25 at** www.craftsman-book.com

Rough Framing Carpentry

If you'd like to make good money working outdoors as a framer, this is the book for you. Here you'll find shortcuts to laying out studs; speed cutting blocks, trimmers and plates by eye; quickly building and blocking rake walls; installing ceiling backing, ceiling joists, and truss joists; cutting and assembling hip trusses and California fills; arches and drop ceilings — all with production line procedures that save you time and help you make more money. Over 100 on-the-job photos of how to do it right and what can go wrong. **304 pages, 8½ x 11, $26.50**

Contractor's Plain-English Legal Guide

For today's contractors, legal problems are like snakes in the swamp — you might not see them, but you know they're there. This book tells you where the snakes are hiding and directs you to the safe path. With the directions in this easy-to-read handbook you're less likely to need a $200-an-hour lawyer. Includes simple directions for starting your business, writing contracts that cover just about any eventuality, collecting what's owed you, filing liens, protecting yourself from unethical subcontractors, and more. For about the price of 15 minutes in a lawyer's office, you'll have a guide that will make many of those visits unnecessary. Includes a CD-ROM with blank copies of all the forms and contracts in the book. **272 pages, 8½ x 11, $49.50**

Estimating Electrical Construction Revised

Estimating the cost of electrical work can be a very detailed and exacting discipline. It takes specialized skills and knowledge to create reliable estimates for electrical work. See how an expert estimates materials and labor for residential and commercial electrical construction. Learn how to use labor units, the plan take-off, and the bid summary to make an accurate estimate, how to deal with suppliers, use pricing sheets, and modify labor units. This book provides extensive labor unit tables and blank forms on a CD for estimating your next electrical job.
280 pages, 8½ x 11, $59.00

***Also available as an eBook (PDF)*, $29.50 at** www.craftsman-book.com

Stair Builders Handbook eBook

If you know the floor-to-floor rise, this handbook gives you everything else: number and dimension of treads and risers, total run, correct well hole opening, angle of incline, and quantity of materials and settings for your framing square for over 3,500 code-approved rise and run combinations — several for every 1/8-inch interval from a 3 foot to a 12 foot floor-to-floor rise.

***Available only as an eBook (PDF);* $9/75 at** www.craftsman-book.com

Pipe & Excavation Contracting Revised

This popular manual has been updated and improved to bring it more current with modern earthmoving and trenching equipment, refined excavation techniques, stricter safety rules, and improved materials. Shows how to read plans and compute quantities for both trench and surface excavation, figure crew and equipment productivity rates, estimate unit costs, bid the work, and get the bonds you need. Learn how to choose the right equipment for each job, use GPS, how to lay all types of water and sewer pipe, work on steep slopes or in high groundwater, efficiently remove asphalt and rock, and the various pipe, joints and fittings now available. Explains how to switch your business to excavation work when you don't have pipe contracts, and how to avoid the pitfalls that can wipe out your profits on any job. **328 pages, 8½ x 11, $55.00**

***Also available as an eBook (PDF)* $17.50 at** www.craftsman-book.com

Markup & Profit: A Contractor's Guide, Revisited

In order to succeed in a construction business, you have to be able to price your jobs to cover all labor, material and overhead expenses, and make a decent profit. But calculating markup is only part of the picture. If you're going to beat the odds and stay in business — profitably, you also need to know how to write good contracts, manage your crews, work with subcontractors and collect on your work. This book covers the business basics of running a construction company, whether you're a general or specialty contractor working in remodeling, new construction or commercial work. The principles outlined here apply to all construction-related businesses. You'll find tried and tested formulas to guarantee profits, with step-by-step instructions and easy-to-follow examples to help you learn how to operate your business successfully. Includes a link to free downloads of blank forms and checklists used in this book. **312 pages, 8½ x 11, $59.50**

***Also available as an eBook (ePub & .mobi)* $39.95 at** www.craftsman-book.com

Handbook of Construction Contracting, Vol. 1

Volume 1: Everything you need to know to start and run your construction business; the pros and cons of each type of contracting, the records you'll need to keep, and how to read and understand house plans and specs so you find any problems before the actual work begins. All aspects of construction are covered in detail, including all-weather wood foundations, practical math for the job site, and elementary surveying. **416 pages, 8½ x 11, $32.75**

Handbook of Construction Contracting, Vol. 2

Volume 2: Everything you need to know to keep your construction business profitable, including estimating methods, controlling costs, concrete, masonry, rough carpentry, roof covering, insulation, doors and windows, exterior finishes, specialty finishes, scheduling, managing workers, marketing, spec building and land development. **320 pages, 8½ x 11, $33.75**

The Complete Book of Home Inspections

This comprehensive manual covers every aspect of home inspection, from the tools required through the inspection of roofs, walls, interior rooms, windows and doors; garages, attics, basements and crawl spaces; paved areas around the structure, landscaping, insect damage and rot; electrical systems, HVAC systems, plumbing systems, and swimming pools. Covers energy considerations and environmental concerns such as radon and mold. Includes hundreds of photos and illustrations to help you understand, check, and identify potential problems. **290 pages, 8 x 10, $19.95**

Painter's Handbook eBook

Loaded with "how-to" information you'll use every day to get professional results on any job: the best way to prepare a surface for painting or repainting; selecting and using the right materials and tools (including airless spray); tips for repainting kitchens, bathrooms, cabinets, eaves and porches; how to match and blend colors; why coatings fail and what to do about it. Lists 30 profitable specialties in the painting business.

***Available only as an eBook (PDF);* $16.50 at** www.craftsman-book.com

Building Code Compliance for Contractors & Inspectors

Have you ever failed a construction inspection? Have you ever dealt with an inspector who has his own interpretation of the Code and forces you to comply with it? This new book explains what it takes to pass inspections under the 2009 *International Residential Code*. It includes a Code checklist — with explanations and the Code section number — for every trade, covering some of the most common reasons why inspectors reject residential work. The author uses his 30 years' experience as a building code official to provide you with little-known information on what code officials look for during inspections.
232 pages, 8½ x 11, $32.50

Building Layout

Shows how to use a transit to locate a building correctly on the lot, plan proper grades with minimum excavation, find utility lines and easements, establish correct elevations, lay out accurate foundations, and set correct floor heights. Explains how to plan sewer connections, level an out-of-level foundation, use a story pole and batterboards, work on steep sites, and minimize excavation costs.
240 pages, 5½ x 8½, $22.00

Builder's Guide to Accounting Revised

Step-by-step, easy-to-follow guidelines for setting up and maintaining records for your building business. This practical guide to all accounting methods shows how to meet state and federal accounting requirements, explains the new depreciation rules, and describes how the Tax Reform Act can affect the way you keep records. Full of charts, diagrams, simple directions and examples to help you keep track of where your money is going. Recommended reading for many state contractor's exams. Each chapter ends with a set of test questions, and a CD-ROM included FREE has all the questions in interactive self-test software. Use the Study Mode to make studying for the exam much easier, and Exam Mode to practice your skills. **360 pages, 8½ x 11, $51.50**

***Also available as an eBook (PDF),* $25.75 at** www.craftsman-book.com

Craftsman Book Company
6058 Corte del Cedro
P.O. Box 6500
Carlsbad, CA 92018

☎ 24 hour order line
1-800-829-8123
Fax (760) 438-0398

Name _____

e-mail address (for order tracking and special offers) _____

Company _____

Address _____

City/State/Zip _____ ❍ This is a residence

Total enclosed _____ (In California add 7.25% tax)

We pay shipping when your check covers your order in full.

In A Hurry?

We accept phone orders charged to your

❍ Visa, ❍ MasterCard, ❍ Discover or ❍ American Express

Card# _____

Exp. date _____ Initials _____

Tax Deductible: Treasury regulations make these references tax deductible when used in your work. Save the canceled check or charge card statement as your receipt.

Order online www.craftsman-book.com

Now you can generate professional estimates from your internet browser with *National Estimator Cloud*.

https://craftsman-book.com/national-estimator-cloud

10-Day Money Back Guarantee — **Prices subject to change without notice**

❍	51.50	Builder's Guide to Accounting Revised	❍	69.00	Insurance Restoration Contracting: Startup to Success
❍	32.50	Building Code Compliance for Contractors & Inspectors	❍	59.50	Markup & Profit, a Contractor's Guide, Revisited
❍	22.00	Building Layout	❍	98.00	National Building Cost Manual
❍	19.95	The Complete Book of Home Inspections	❍	97.50	National Construction Estimator
❍	48.50	Construction Forms for Contractors	❍	98.50	National Repair & Remodeling Estimator
❍	68.50	Contractor's Guide to *QuickBooks* by Online Accounting	❍	46.50	Paint Contractor's Manual
❍	49.50	Contractor's Plain English Legal Guide	❍	55.00	Pipe & Excavation Contracting Revised
❍	59.00	Estimating Electrical Construction Revised	❍	24.75	Profits in Buying & Renovating Homes
❍	32.75	Handbook of Construction Contracting, Volume 1	❍	26.50	Rough Framing Carpentry
❍	33.75	Handbook of Construction Contracting, Volume 2	❍	25.50	Wood-Frame House Construction
❍	28.50	How to Succeed With Your Own Construction Business	❍	98.75	Fences & Retaining Walls Revised

Writing contracts that comply with law in your state isn't easy. A contract that doesn't comply could leave you with no way to collect.
Construction Contract Writer has you covered. Download a trial today:
www.constructioncontractwriter.com