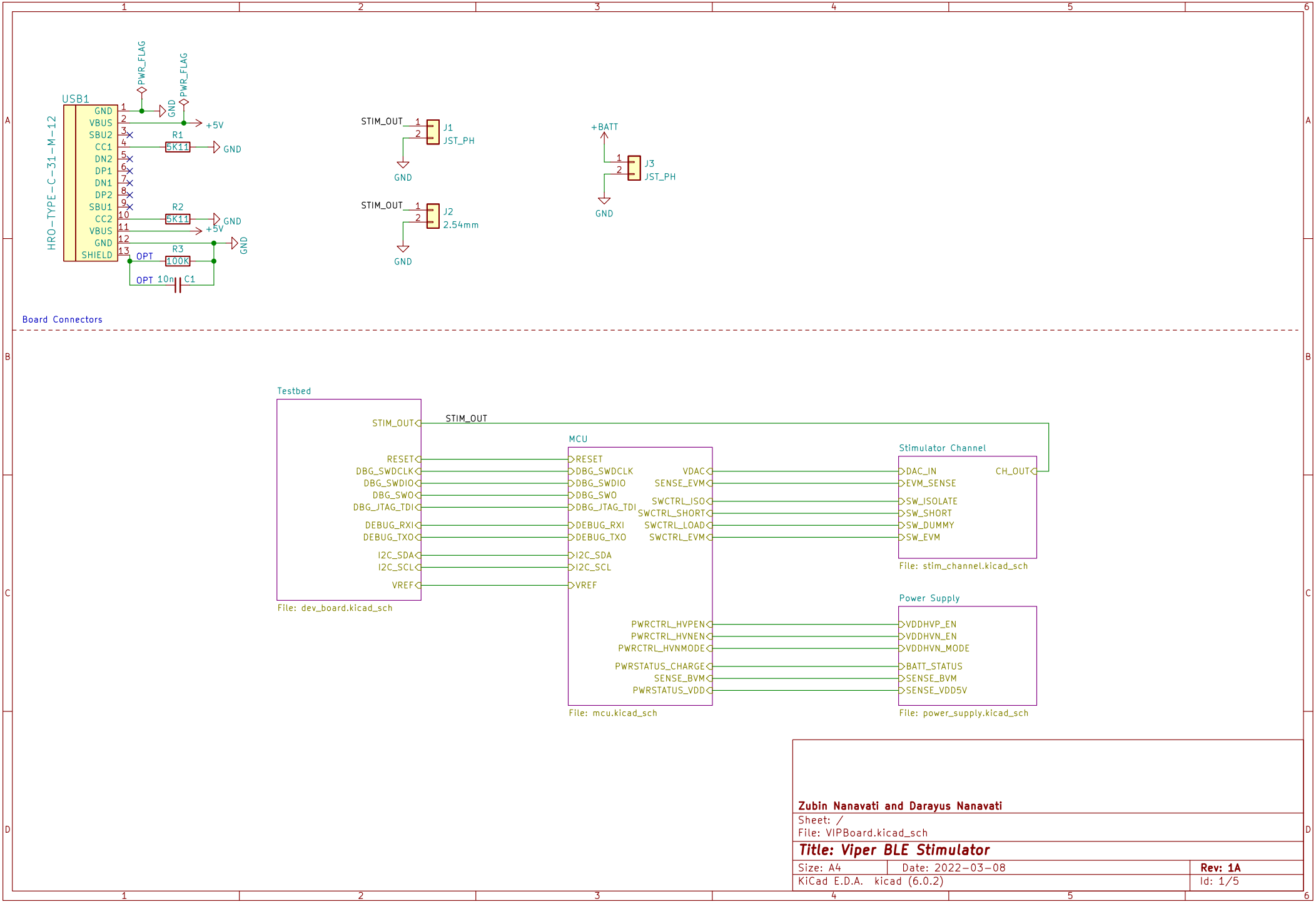

Zubin Nanavati and Darayus Nanavati

Sheet: /

File: VIPBoard.kicad_sch

Title: Viper BLE Stimulator

Size: A4	Date: 2022-03-08	Rev: 1A
KiCad E.D.A. kicad (6.0.2)		Id: 1/5

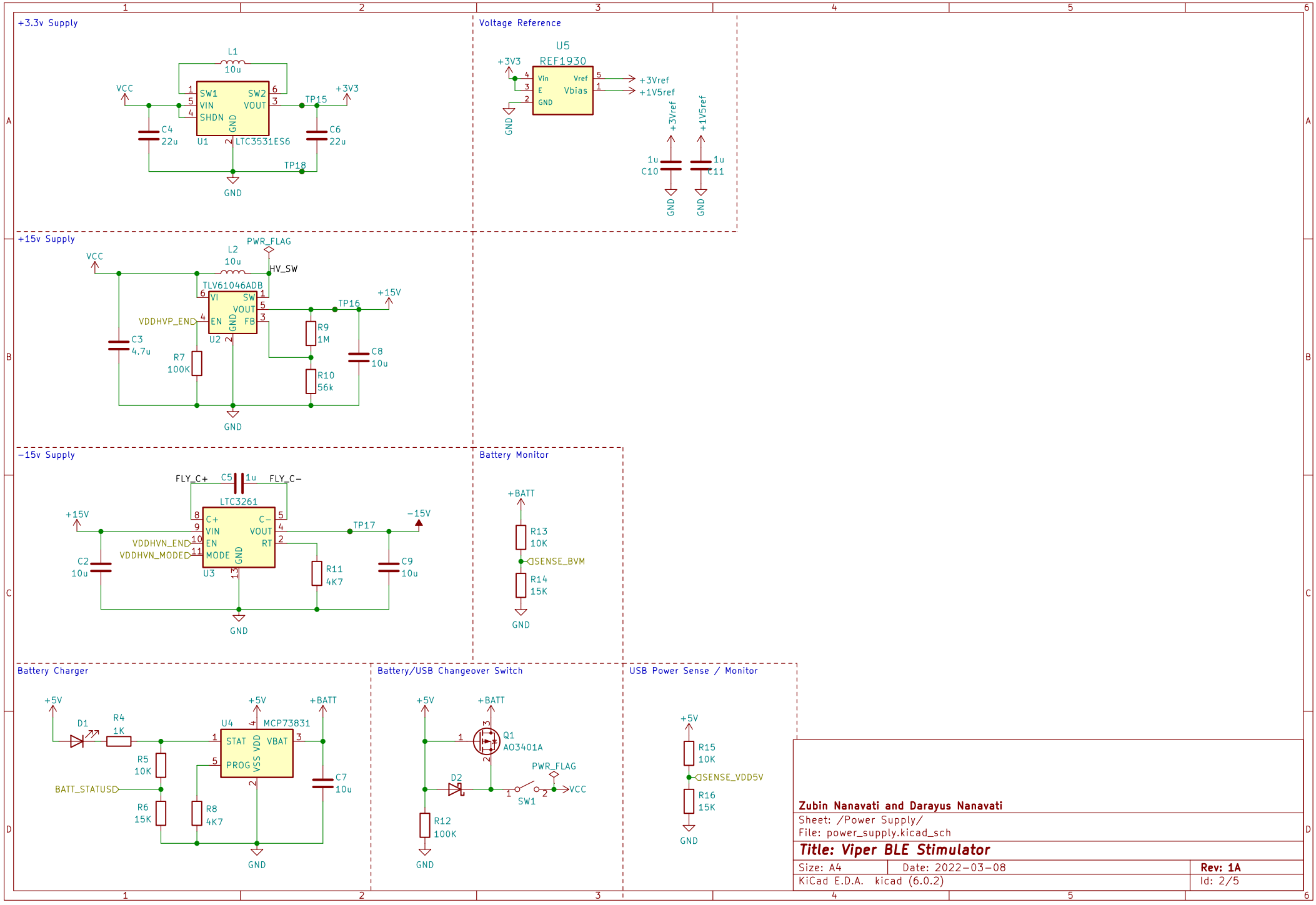

Zubin Nanavati and Darayus Nanavati

Sheet: /Power Supply/

File: power_supply.kicad_sch

Title: Viper BLE Stimulator

Size: A4	Date: 2022-03-08	Rev: 1A
KiCad E.D.A. kicad (6.0.2)		Id: 2/5

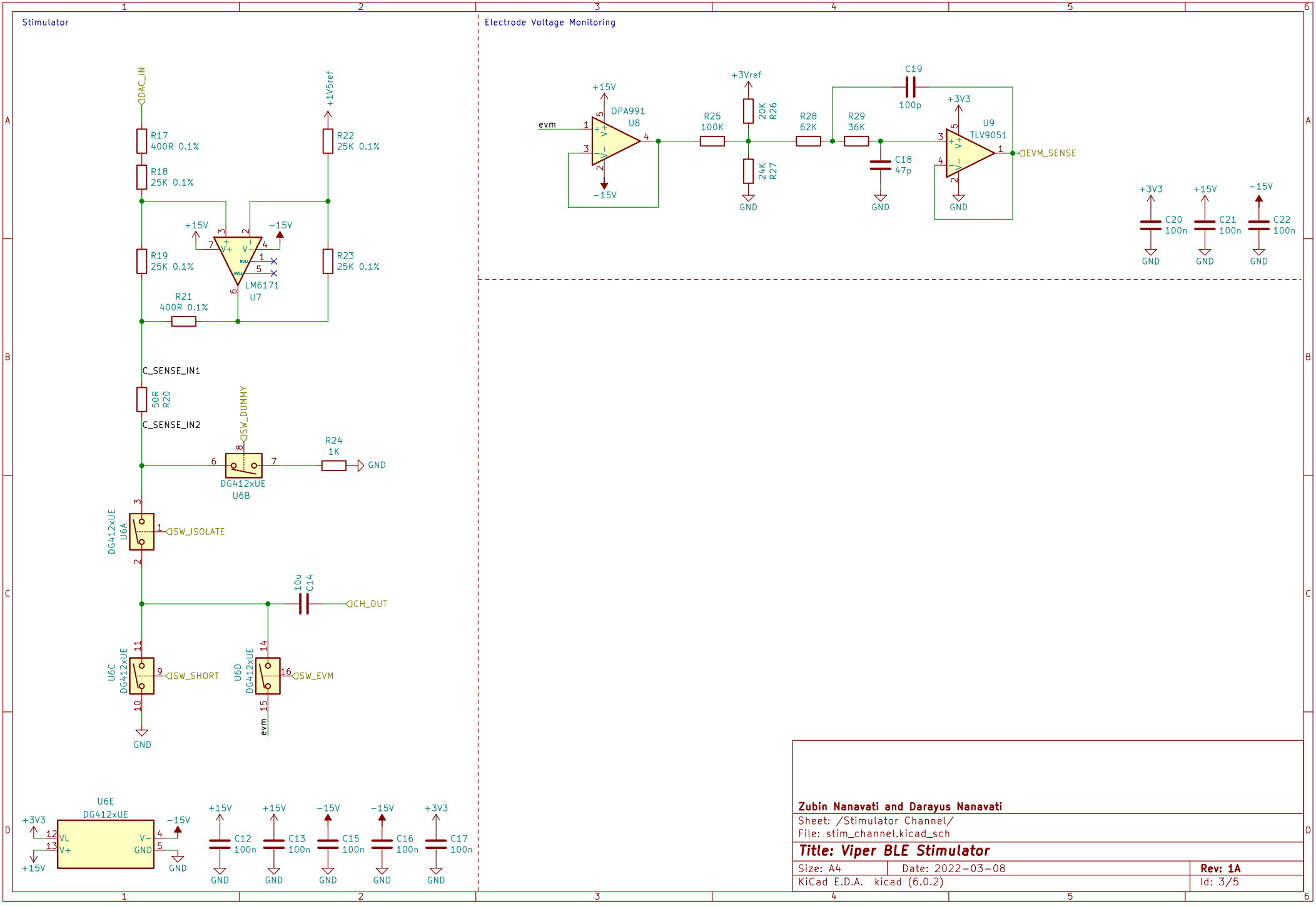
Stimulator
Electrode Voltage Monitoring
DAC_IN
+1V5ref
R17 400R 0.1%
R18 25K 0.1%
R19 25K 0.1%
R21 400R 0.1%
R22 25K 0.1%
R23 25K 0.1%
+15V
−15V
LM6171 U7
C_SENSE_IN1
50R R20
C_SENSE_IN2
SW_DUMMY
R24 1K
GND
DG412xUE U6B
DG412xUE U6A
SW_ISOLATE
10u C14
CH_OUT
U6C DG412xUE
SW_SHORT
U6D DG412xUE
SW_EVM
evm_15
U6E DG412xUE
+3V3
VL
V+
V−
C12 100n
C13 100n
C15 100n
C16 100n
C17 100n
evm
OPA991 U8
R25 100K
+3Vref
20K R26
24K R27
R28 62K
R29 36K
C18 47p
C19 100p
U9 TLV9051
EVM_SENSE
C20 100n
C21 100n
C22 100n
Zubin Nanavati and Darayus Nanavati
Sheet: /Stimulator Channel/
File: stim_channel.kicad_sch
Title: Viper BLE Stimulator
Size: A4
Date: 2022-03-08
Rev: 1A
KiCad E.D.A. kicad (6.0.2)
Id: 3/5

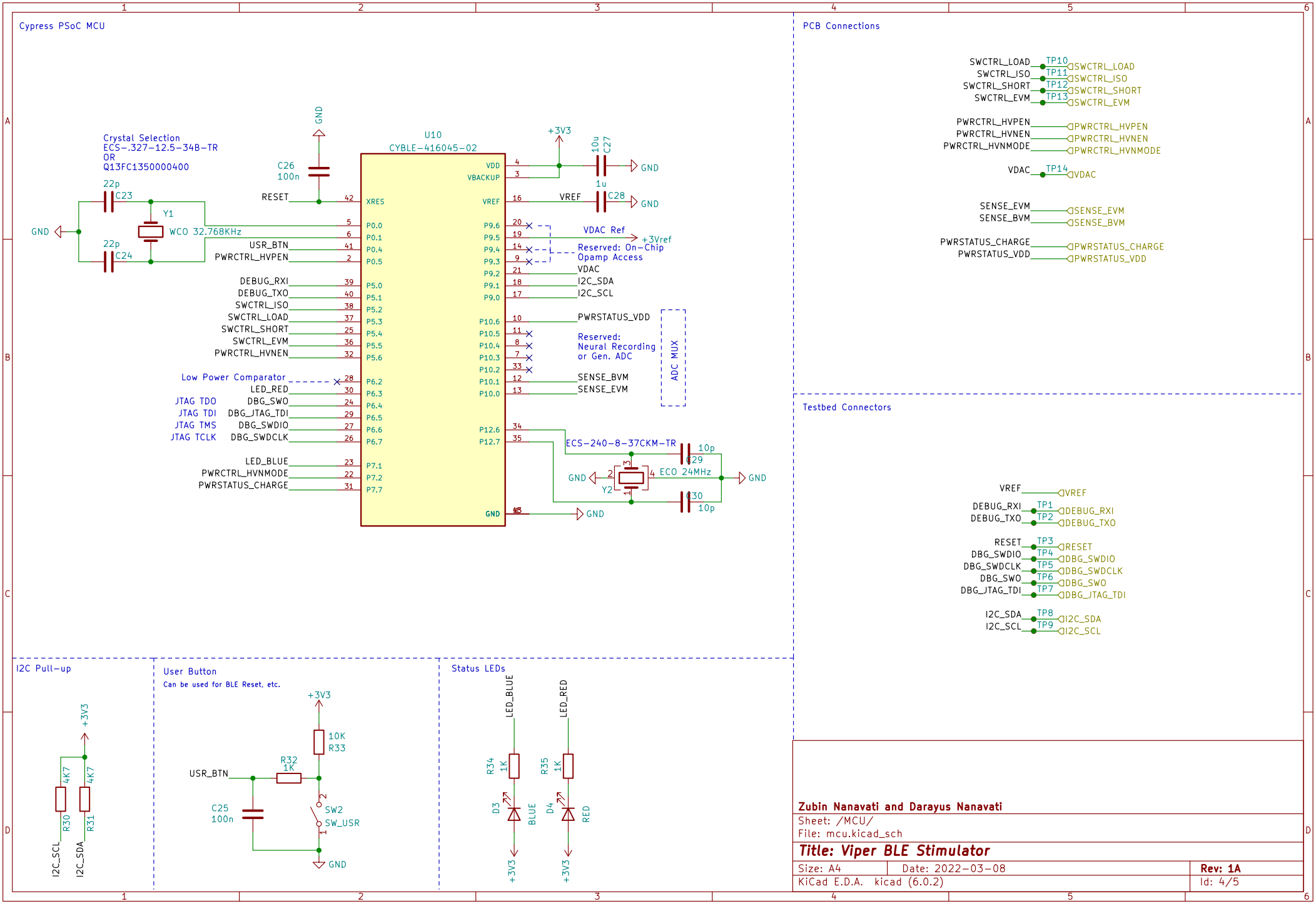
Cypress PSoC MCU
Crystal Selection
ECS-.327-12.5-34B-TR
OR
Q13FC1350000400
22p
C23
22p
C24
Y1
WCO 32.768KHz
GND
C26
100n
RESET
U10
CYBLE-416045-02
XRES
P0.0
P0.1
P0.4
P0.5
USR_BTN
PWRCTRL_HVPEN
DEBUG_RXI
DEBUG_TXO
SWCTRL_ISO
SWCTRL_LOAD
SWCTRL_SHORT
SWCTRL_EVM
PWRCTRL_HVNEN
P5.0
P5.1
P5.2
P5.3
P5.4
P5.5
P5.6
Low Power Comparator
LED_RED
JTAG TDO
DBG_SWO
JTAG TDI
DBG_JTAG_TDI
JTAG TMS
DBG_SWDIO
JTAG TCLK
DBG_SWDCLK
P6.2
P6.3
P6.4
P6.5
P6.6
P6.7
LED_BLUE
PWRCTRL_HVNMODE
PWRSTATUS_CHARGE
P7.1
P7.2
P7.7
VDD
VBACKUP
VREF
P9.6
P9.5
P9.4
P9.3
P9.2
P9.1
P9.0
P10.6
P10.5
P10.4
P10.3
P10.2
P10.1
P10.0
P12.6
P12.7
GND
+3V3
10u
C27
1u
C28
VREF
VDAC Ref
+3Vref
Reserved: On-Chip
Opamp Access
VDAC
I2C_SDA
I2C_SCL
PWRSTATUS_VDD
Reserved:
Neural Recording
or Gen. ADC
ADC MUX
SENSE_BVM
SENSE_EVM
ECS-240-8-37CKM-TR
10p
C29
ECO 24MHz
Y2
C30
10p
PCB Connections
SWCTRL_LOAD
TP10
SWCTRL_ISO
TP11
SWCTRL_SHORT
TP12
SWCTRL_EVM
TP13
PWRCTRL_HVPEN
PWRCTRL_HVNEN
PWRCTRL_HVNMODE
VDAC
TP14
SENSE_EVM
SENSE_BVM
PWRSTATUS_CHARGE
PWRSTATUS_VDD
Testbed Connectors
VREF
DEBUG_RXI
TP1
DEBUG_TXO
TP2
RESET
TP3
DBG_SWDIO
TP4
DBG_SWDCLK
TP5
DBG_SWO
TP6
DBG_JTAG_TDI
TP7
I2C_SDA
TP8
I2C_SCL
TP9
I2C Pull-up
+3V3
4K7
R30
4K7
R31
I2C_SCL
I2C_SDA
User Button
Can be used for BLE Reset, etc.
+3V3
10K
R33
USR_BTN
R32
1K
C25
100n
SW2
SW_USR
GND
Status LEDs
LED_BLUE
LED_RED
R34
1K
R35
1K
D3
BLUE
D4
RED
+3V3
+3V3
Zubin Nanavati and Darayus Nanavati
Sheet: /MCU/
File: mcu.kicad_sch
Title: Viper BLE Stimulator
Size: A4
Date: 2022-03-08
Rev: 1A
KiCad E.D.A. kicad (6.0.2)
Id: 4/5

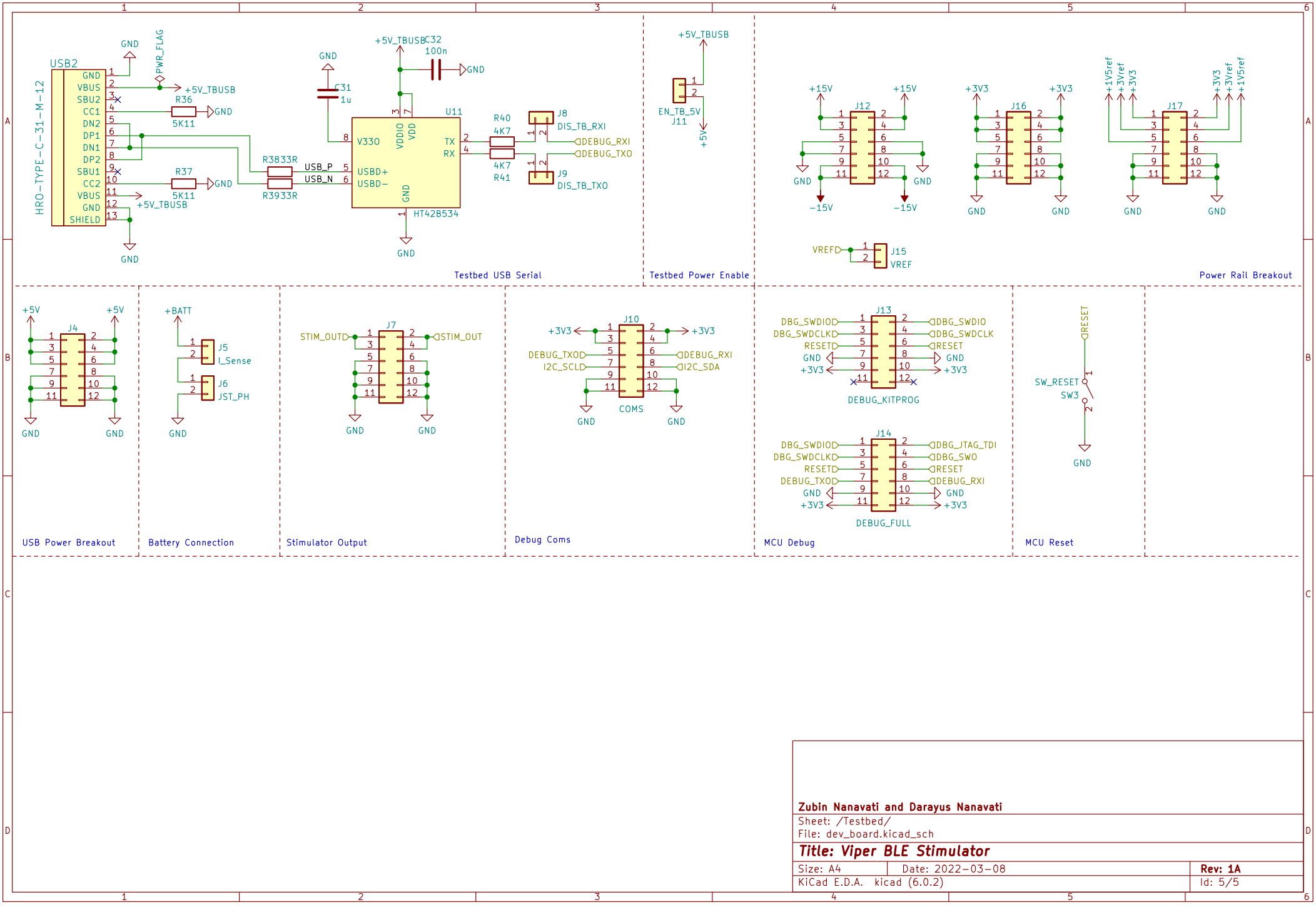

Zubin Nanavati and Darayus Nanavati

Sheet: /Testbed/

File: dev_board.kicad_sch

Title: Viper BLE Stimulator

Size: A4	Date: 2022-03-08	Rev: 1A
KiCad E.D.A. kicad (6.0.2)		Id: 5/5