PCB001289
SV62 / CH63 / DR64
PRIMARY C SAMPLE

Revision	Change Description	Date
B0	Initial release	Dec, 2023
B1	1 PCB001218 - SV62 / CH63 2 PCB001208 - DR64	Oct, 2024
B2	1 PCB001231 - Main connector - Bosch for all platforms 2 B2B connection changed from FPC to B2B connector 3 PCB001281 - Fixed Short issue on USS FRONT 1	Mar, 2025
C1	1 PCB001289 - C Sample PCB	May, 2025

PCB1
PCB
PCB001289
PCB

Mobileye Vision Technologies
13 Hartom St., Jerusalem 91450
Tel: +972(0)2-541-7333
Fax: +972(0)2-541-7300
Site: www.Mobileye.com

Project: DR64 no debug		Board:	PRI C Sample
Project version:	1.0	Design:	COVER
Sheet: 1 of: 22		Classification:	Confidential
Size: A2	Document Number:	<Doc>	

	Name	Date	Signature
Designed:	Ilan Braun	Sunday, November 09, 2025	
Checked:	Alon Rotman	<C. Date>	
Approved:	<Approved>	<A. Date>	

Tracking List

Num	Implemented in DSN ver.	Reason for change	Change	Remark	Risk
1	V1	C1 SAMPLE based on B2	PCB001289 - new PCB		
2		Implemented Valens ESD recommendation	Moving the TVS to the connector side and add 22nF 50V 0402 (CAP000640) in series on all PoA filter networks		
3		Valens gearing strapping resistors	Added R4419 and R4420 to Valens U21.K17 and U25.K17 for 4Gbps PAM4 config on boot		
4		Quiescent Current higher than expected	found R2504 and R2503 both connected - un-assemble R2504		
5	V2	0v84_10G_PHY DC-DC bias	U167 pin4 - bias - connect to MCU_3V3 (instead of 3V3)		
6		Add PD to KEEPALIVE	Added R44211K RES000421 to keep "WAKE.3V3_MCU_KEEPALIVE" at 0V in boot		
7		J2 TE Hybrid connector new sample	Change J2, hybrid connector, to new C sample from TE COM001364 (instead of CON 001283 - B sample)		
8	V3	PoC 12V Buck-Boost current limit	Change R802 from 100K to 37.4K (RES000955) to adjust PoC current limit after simulations		
9		Change Valens ESD capacitors to 0603 100V	The 22nF capacitors on the PoA filter networks changed from 0402 50V to 0603 100V to meet VW80808 (CAP000735) C5993-C6000		
10		Add 15K resistor to En of TPS6287x DC-DC	R4422 on 3V3 EN, R4423 on 1V8 EN, R4424 on DES_0v8 EN, R4369 on EQ0_VDD_CORE EN, R4428 on EQ0 1v05 EN, R4429 on EQ0 VDDQ EN, R4370 on EQ1_VDD_CORE EN, R4433 on EQ1_1v05 EN, R4434 on EQ1 VDDQ EN, R4435 on TDA4 CORE EN, R4436 on TDA4_0v8_CPU_AVS		
11		Remove components due to Valeo DFM	Remove due to Valeo DFM C309, R241 - was in the MAIN connector area		
12		Connected IRQ from A2B to TDA4	Connected IRQ from A2B (U170 pin 6) to TDA4 U137 GPIO pin AL33 for SW usage		
13	V4	IGNITION RETURN SIGNAL	On MAIN connector connect the return IGNITION trough R4437 0R (RES000449), to DGND - assembled only in debug variant, also, add a ESD protection to that pin D234 (TVS000086)		
14		Change switching freq. for ETH DC-DCs	Added 0R (RES000449 from COMP_fset pin to supply voltage - for ETH_1v8 (U29) - add R4438 0R and un-assemble R2867, for 0v8_SW0 (U161) add R4439 0R and un-assemble R2793, for 0v8_SW1 (U157) add R4440 0R and un-assemble R2690		
15		MCU ADC pins float in SV platform	Add PD 10K resistor to float ADC MCU pins in SV platform: add O_R5633 to "SAFETU_SIG.RED_GND_IMON, for "VBAT_INPUT_STAGE.RED_IN_HSS_VNOM assemble O_R2374		
16		Add MLCC to VDD_CORE_AVS rail	Added 4x 2.2uF 0603 (CAP000617) to "VDD_CORE_AVS" rail to improve PDN simulation results		
17		Discharge circuit bug	FET TH is 2V - change 7 FETs (Q61 [1V8],Q62[3V3],Q124[5V],Q71[EQ0_VDD_CORE],Q76[EQ0_1V05],Q78[EQ1_VDD_CORE],Q83[EQ1_1V05]) from TRN000147 to TRN100143 - with 1.3V TH		
18	V5	Change MCU UART Tx resistor value	The MCU to EQ UART Tx resistors, R1990 (for EQ0) and R1992 for(EQ1) should be change from 1K to 56R (RES001102) - according to EQ design guide update		
19		Added circuit to protect heater HSS current sense	Added Q136 and Q137 (TRN000088), R4442 (100K RES000408) - protect from CS pin on heater HSS to reach 4-5V in enable is not set and a fault presence on heater element		
20		"VBAT_INPUT_STAGE.3v3_MAIN_HSS_STATUS" signal isolation	Added D236 (DID100118) (in parallel to R4282) to isolate the signal between 1.8V and 3.3V - it keeps sending false report to MCU - the diode will only pass the "0" to the EN circuit		
21		SW0 MDC termination resistor added	Added R4329 22 ohm RES000660 to U14.C17 MDC		
22		"EN_RESET" voltage divider 3.3V to 1.8V	Added R4443 (10K - RES000483) and R4444 (12K - RES000495) to divide the 3.3V signal to 1.8V level - to avoid back feed to 1.8V		
23		USS HSS TVS diodes changed to higher Vbr	Changed D133 and D134 to TVS100152 to have higher Vbr=36.7V as test E04 and E05 has 26/27V (instead of TVS000088 Vbr=14.3V)		
24		Added capacitors to input rail of Eqs_VDD_CORE, EQs_1V05 and Eqs_VDDQ - EMC improvement	Added 470nF 0603 (CAP000618) - C6005-C6016 (2x per each phase of VDD_CORE input, per each EQ), 470nF 0402 (CAP000865) - A_C6027-A_C6028 and B_C6027-B_C6028 (2x each Eqx_1V05 input), A_C6029-A_C6030 and B_C6029-B_C6030 (2x each Eqx_VDDQ input)		
25		Added capacitance to 3V3 and 1V8 on CLOCK GEN supplies - EMC improvement	Added 47nF 0402 (CAP000709) C6017-C6020 and C6022-C6025 (4x each CLOCK GEN on 3V3), C6021 and CC6026 (1x each CLOCK GEN 1V8)		
26		Change C5982 MLCC value - wrong value was initially selected	C5982 value changed from 1uF (CAP000353) to 1nF (CAP000652) - in order not to affect the timing		
27	V6	MCU EEPROM WP header for debug	To ease the access to MCU EEPROM (U59) WP signal - added a header J26 (CON000390), Added R4445 1K 0402 (RES000421) – since this signal will connect to MCU PGIO		
28		Remove C4453 from design	Remove C4453 22uF 1210 MLCC from 12vPoC rail due to mechanical constrain		
29		Remove TP from eMMCs signals on all Ics	After alignment with Promic all eMMC TP are removed from all ICs (MCU, TDA4, EQs)		
30		DES_0V8 DC-DC I2C address set	Assemble R1707 47K RES000816 to set U43 address to 0x43		
31	V7	Input reverse protaction - gate controller PG had week PU resistor	Change O_R1552 (MAIN battery) and O_R2360 (RED battery) to 10K 0402 (RES000483)	ECOM04899	
32	V8	CAN_FD EN and STBn PU/PD alignment	Assembled EN PDs, STBn PU - for CAN.RADAR1-5, for CAN.RADAR2 connected the supply to 5V_CAN		
33		Option to control TDA4_OTP throuh TDA4	Added R4446 - connected to MCU and R4447 - connected toTDA4 (U137.AD34)		
34		Heater HSS current sense protection change enable	Connect Q137.1 (FET gate) to U72.12 (DIAG_EN) instead of U72.3 (IN)		
35		PoC PI filter capacitor change	Cahnge the 22uF 1210 25V capacitors to 10uF 1210 50V - the 25V derating is not sufficient to this voltage rail		
36		EQs VDDH change the ferrite to resistor to reduce noise and improve margins	Change A_FB26 and B_FB26 from ferrite COL00036 to A_R4448 and B_R4448 0R 0603 RES000752 - this will improve the EQ_1V8_PCIe noise and margins according to simulations		
37		Leakage from TDA4 to LEO PMIC	Un-assemble R4348 and assemble R4349 - 0R RES000449 - due to 3V3 leakage to VDD_IO_1V8 - LEO PMIC fail on boot		
38	V9	Remove MLCCs due to layout change of 1210 pads	Remove: A_C130, B_C130, A_C937, B_C937, A_C1185, B_C1185, C5183, C4469, A_C192, B_C192, C4827, A_C707, B_C707		
39		SV Platform BOM udpate	Un-assemble Q129 and R4311 from SV BOM - No AUDIO in SV		
40	V10	Avoid voltage jump on O_U79 when input voltage is tuggles	Change O_R1545 to 0R (RES000984) - instead of 1R (RES000824 2512)		
41	V11	"ALL_RESET_EN" buffer - U202 OE PU update	Change R4414 to 47K (RES000816) to allow the low level signal to be in the 35% of VCC max - according to datasheet	ECOM05202	
42		TDA4 Power Down BOM update	C5883 - NA, R4372 - 15K (RES000546), R2980 - 5.1R (RES000932), R2982 - 3.9R (RES000498), R4390 - 19.6K (RES000685), C5967 - 100nF (CAP000253), R4280 - 5.1K (RES000410), D236 - NA		
43		BOM update	Change CAP100543 to CAP000268 - as CAP100543 had only one MFG part number and moved to EOL in ME library - same MFG part in CAP000268- ease the BOM		
44		Align WAKE_IGNITION assembly to debug variant only	Q53 - assembled only in debug - Assemble: R2002, R1974, C5852-C5853		
45	V12	Change eMMCs	Change Samsung eMMC to Micron - as Samsung is EOL (only on DR platform)		
46	V13	BOM change - to align with datasheet	According to https://jira.mobileye.com/browse/AVP-11629, need to change R1256, PMIC_INTB PU to 5.1K (RES000410) instead of 10K	ECOM05389	Low
47	V14	Change L60 from 1uH to 2.2uH	Change L60 to IND000375 - 2.2uH		
48		Change current sense resistor O_R1561 to 2m Ohm - due to fail in DV test	Change O_R1561 to RES001108 - 2m Ohm 3W 1206		
49		Change 5V P.S gate resistor to 4.7 Ohm - EMC recommendetion	Replace R1722, R1724, R1739, R1744 to 4.7ohm - RES000710		
50		Replace TVS000082 to TVS000089	Change all TVS000082 to TVS000089 - as TVS000082 is not in the component approval list	09/11/2025	Low

Mobileye
Mobileye Vision Technologies
13 Hartom St., Jerusalem 91450
Tel: +972|02-541-7333
Fax: +972|02-541-7800
Site: www.Mobileye.com

Project: DR64 no debug		Board:	PR C Sample
Project version: 1.0	Design:	Tracking List	
Sheet: 2 of: 22	Classification:	Confidential	
Size: A0	Document Number:	<Doc>	
	Name	Date	Signature
Designed:	Ilan Braun	Thursday, November 20, 2025	
Checked:	Alon Rolman	<C. Date>	
Approved:	<Approved>	<A. Date>	

MAIN CONNECTOR

FG27 - Main Connector

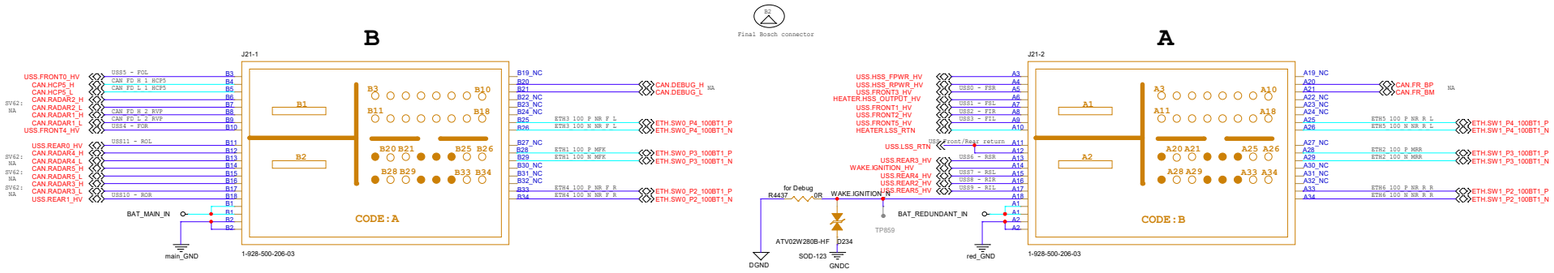

Pinout per Platform

Connector - PIN		SV62	CH63	DR64
B	3	USS5 - FOL	USS5 - FOL	n.c.
B	4	*CAN_FD_H_1_HCP5	*CAN_FD_HCP5_H	PRI CANFD_1_H
B	5	*CAN_FD_L_1_HCP5	*CAN_FD_HCP5_L	PRI CANFD_1_L
B	6	n.c.	n.c.	PRI CANFD_3_H
B	7	n.c.	n.c.	PRI CANFD_3_L
B	8	*CAN_FD_H_2_RVP	n.c.	PRI CANFD_5_H
B	9	*CAN_FD_L_2_RVP	n.c.	PRI CANFD_5_L
B	10	USS4 - FOR	USS4 - FOR	n.c.
B	11	USS11 - ROL	USS11 - ROL	n.c.
B	12	n.c.	n.c.	PRI CANFD_2_H
B	13	n.c.	n.c.	PRI CANFD_2_L
B	14	n.c.	n.c.	PRI CANFD_4_H
B	15	n.c.	n.c.	PRI CANFD_4_L
B	16	n.c.	n.c.	PRI CANFD_6_H
B	17	n.c.	n.c.	PRI CANFD_6_L
B	18	USS10 - ROR	USS10 - ROR	n.c.

Connector - PIN		SV62	CH63	DR64
B	19	n.c.	n.c.	n.c.
B	20	*CAN_FD_H_3_DEBUG	n.c.	n.c.
B	21	*CAN_FD_L_3_DEBUG	n.c.	n.c.
B	22	n.c.	n.c.	n.c.
B	23	n.c.	n.c.	n.c.
B	24	n.c.	n.c.	n.c.
B	25	*ETH3_100_P_NR_F_L	*ETH3_100_P_NR_F_L	n.c.
B	26	*ETH3_100_N_NR_F_L	*ETH3_100_N_NR_F_L	n.c.
B	27	n.c.	n.c.	n.c.
B	28	*ETH1_100_P_MFK	*ETH1_100_P_NR_S_L	n.c.
B	29	*ETH1_100_N_MFK	*ETH1_100_N_NR_S_L	n.c.
B	30	n.c.	n.c.	n.c.
B	31	n.c.	n.c.	n.c.
B	32	n.c.	n.c.	n.c.
B	33	*ETH4_100_P_NR_F_R	*ETH4_100_P_NR_F_R	A2B_P
B	34	*ETH4_100_N_NR_F_R	*ETH4_100_N_NR_F_R	A2B_N

Pinout per Platform

Connector - PIN		SV62	CH63	DR64
A	3	USS_Front_Power	USS_Front_Power	n.c.
A	4	USS_Rear_Power	USS_Rear_Power	n.c.
A	5	USS0 - FSR	USS0 - FSR	n.c.
A	6	*HEATER_DC_P	HEATER_P_CBS_F	n.c.
A	7	USS1 - FSL	USS1 - FSL	n.c.
A	8	USS2 - FIR	USS2 - FIR	n.c.
A	9	USS3 - FIL	USS3 - FIL	n.c.
A	10	*HEATER_DC_N	HEATER_M_CBS_F	n.c.
A	11	USS_Front_GND	USS_Front_GND	n.c.
A	12	USS_Rear_GND	USS_Rear_GND	n.c.
A	13	USS6 - RSR	USS6 - RSR	n.c.
A	14	*DEBUG_IGNITION_P	Ignition_DBG_P	SEC_IGNITION_P
A	15	USS7 - RSL	USS7 - RSL	n.c.
A	16	USS8 - RIR	USS8 - RIR	n.c.
A	17	USS9 - RIL	USS9 - RIL	n.c.
A	18	*DEBUG_IGNITION_N	Ignition_DBG_N	SEC_IGNITION_N

Connector - PIN		SV62	CH63	DR64
A	19	n.c.	n.c.	n.c.
A	20	n.c.	n.c.	n.c.
A	21	n.c.	n.c.	n.c.
A	22	n.c.	n.c.	n.c.
A	23	n.c.	n.c.	n.c.
A	24	n.c.	n.c.	n.c.
A	25	*ETH5_100_P_NR_R_L	*ETH5_100_P_NR_R_L	n.c.
A	26	*ETH5_100_N_NR_R_L	*ETH5_100_N_NR_R_L	n.c.
A	27	n.c.	n.c.	n.c.
A	28	*ETH2_100_P_MRR	*ETH2_100_P_NR_S_R	n.c.
A	29	*ETH2_100_N_MRR	*ETH2_100_N_NR_S_R	n.c.
A	30	n.c.	n.c.	n.c.
A	31	n.c.	n.c.	n.c.
A	32	n.c.	n.c.	n.c.
A	33	*ETH6_100_P_NR_R_R	*ETH6_100_P_NR_R_R	n.c.
A	34	*ETH6_100_N_NR_R_R	*ETH6_100_N_NR_R_R	n.c.

GROUND CURRENT SENSE

FG16 - Hardware Diagnostics

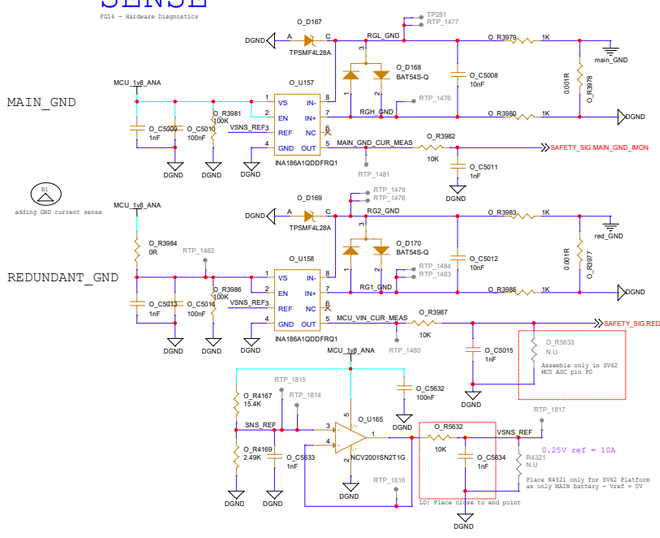

GND/C & Holes

FG27 - Main Connector

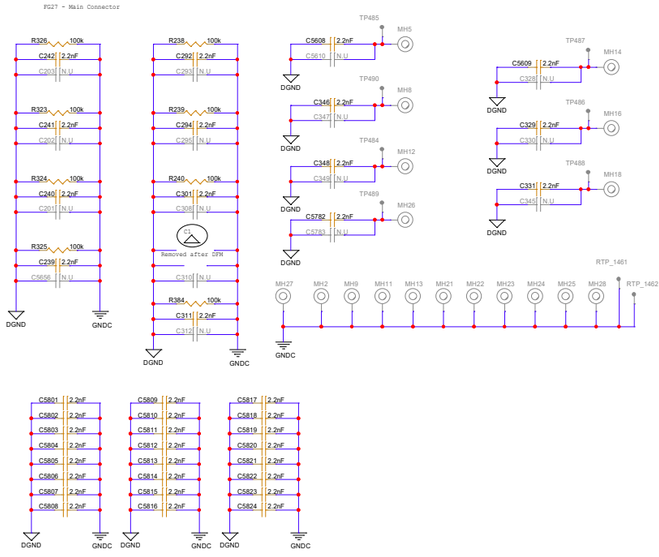

Debug CONN

FG23 - Debug Connector

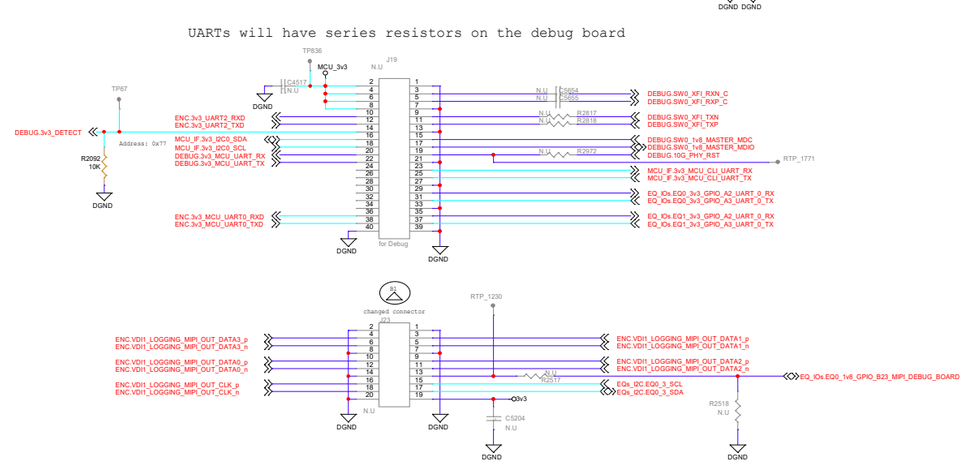

FAN

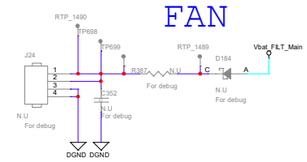

B2B CONNECTOR

FG25 - B2B Connector

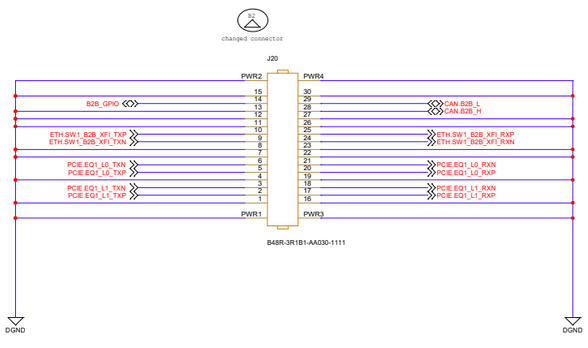

ETH/GMSL CONN

FG24 - Sensor Connector

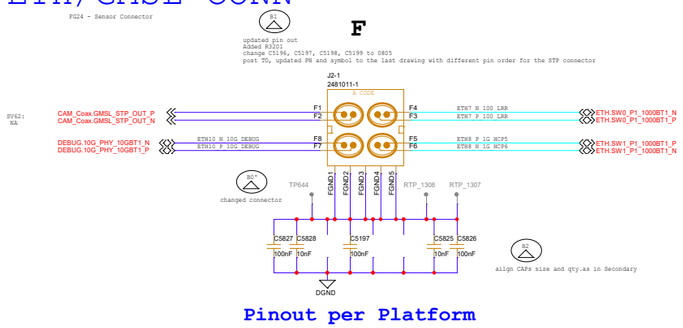

Pinout per Platform

Connector - PIN		SV62	CH63	DR64
F	F1	n.c.	n.c.	n.c.
F	F2	n.c.	n.c.	n.c.
F	F3	*ETH7_P_100_LRR	*ETH7_P_100_LRR	ETH.SW0_P1_1000BT1_P
F	F4	*ETH7_N_100_LRR	*ETH7_N_100_LRR	ETH.SW0_P1_1000BT1_N
F	F5	*ETH8_P_1G_HCP5	*ETH8_P_1G_HCP5	ETH.SW1_P1_1000BT1_P
F	F6	*ETH8_N_1G_HCP5	*ETH8_N_1G_HCP5	ETH.SW1_P1_1000BT1_N
F	F7	*ETH10_P_10G_DEBUG	*ETH10_P_10G_DEBUG	n.c.
F	F8	*ETH10_N_10G_DEBUG	*ETH10_N_10G_DEBUG	n.c.

VDI

FG24 - Sensor Connector

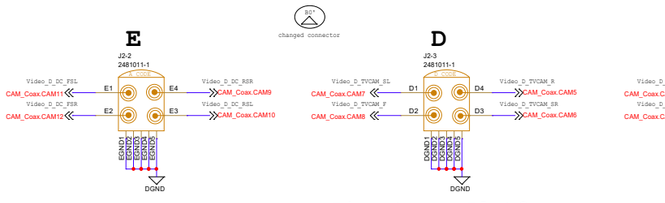

Pinout per Platform

Connector - PIN		SV62	CH63	DR64
E	E1	*Video_D_DC_FSL	*Video_D11_CBS_FL	Video_D11
E	E2	*Video_D_DC_FSR	*Video_D12_CBS_FR	Video_D12
E	E3	*Video_D_DC_RSL	*Video_D10_CBS_RL	Video_D10
E	E4	*Video_D_DC_RSR	*Video_D9_CBS_RR	Video_D9

Connector - PIN		SV62	CH63	DR64
D	D1	*Video_D_TVCAM_S	*Video_D7_TVCAM_SL	Video_D7
D	D2	*Video_D_TVCAM_F	*Video_D8_TVCAM_F	Video_D8
D	D3	*Video_D_TVCAM_SR	*Video_D6_TVCAM_SR	Video_D6
D	D4	*Video_D_TVCAM_R	*Video_D5_TVCAM_R	Video_D5

Connector - PIN		SV62	CH63	DR64
C	C1	*Video_D_DC_NARROW	*Video_D2_CBS_NAROW	Video_D2
C	C2	*Video_D_DC_REAR	*Video_D3_CBS_REAR	Video_D3
C	C3	*Video_D_DC_MAIN	*Video_D1_CBS_MAIN	Video_D1
C	C4	n.c.	n.c.	n.c.

DR64 no debug

PCB001289_PRIMARY_C1_V14 /

Mobileye Vision Technologies
13 Hartom St., Jerusalem 91450
Tel: +972(0)2-541-7333
Fax: +972(0)2-541-7300
Site: www.Mobileye.com

Project:	PRI C Sample	Board:	PCB001281
Project version:	1.0	Design:	CONN
Sheet: 3	of: 22	Classification:	Confidetial
Size: A1	Document Number:	<Doc>	

	Name	Date	Signature
Designed:	Ilan Braun	Sunday, November 09, 2025	
Checked:	Alon Rotman	<C. Date>	
Approved:	<Approved>	<A. Date>	

CAN Transceivers : 1- 5

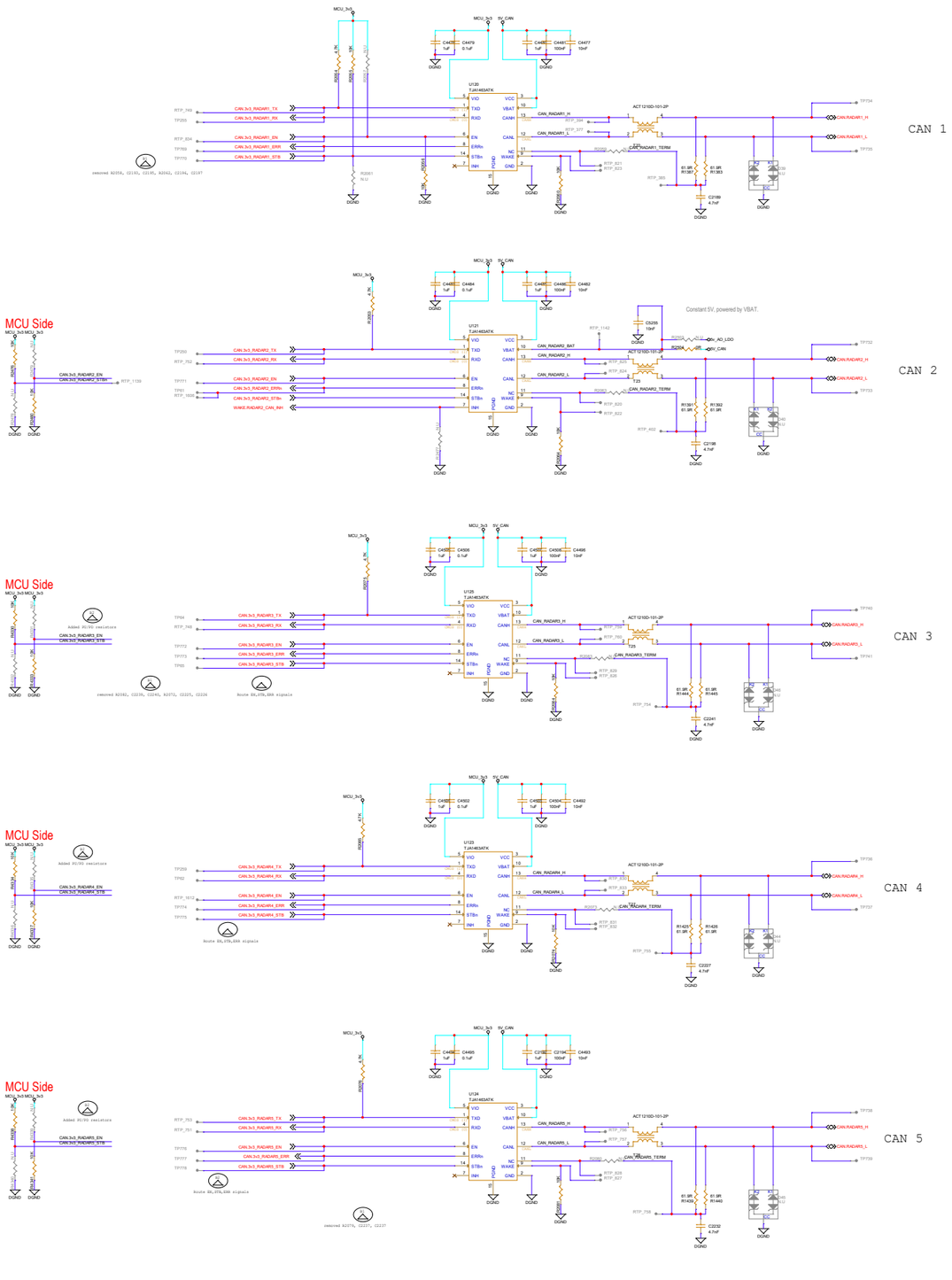

CANFD CAR With Wakeup

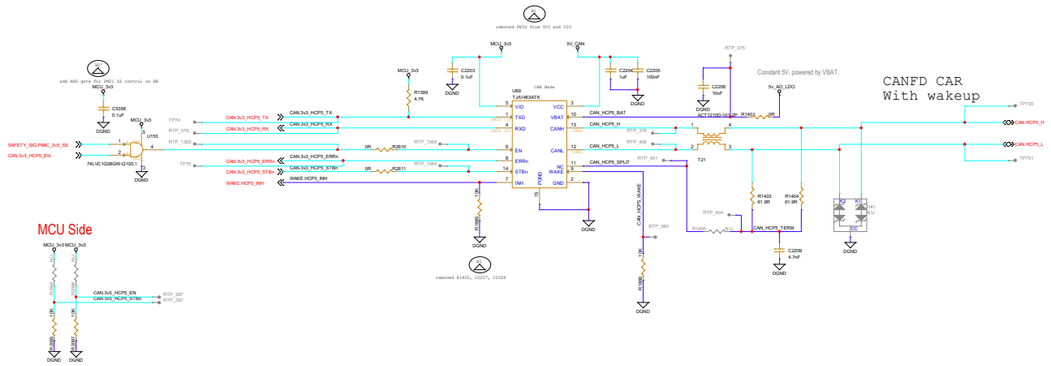

CANFD B2B With Wakeup

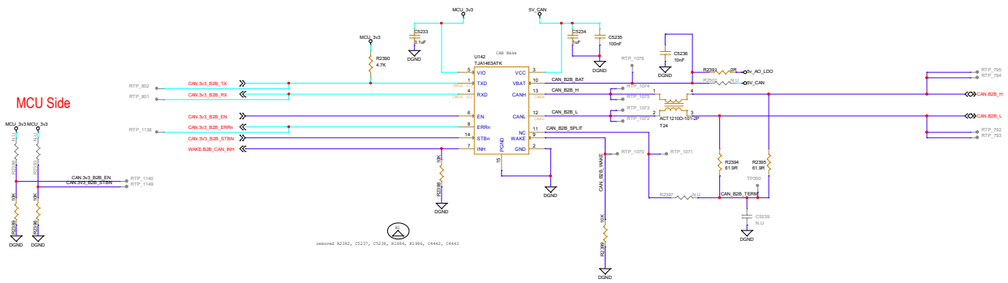

DEBUG CAN

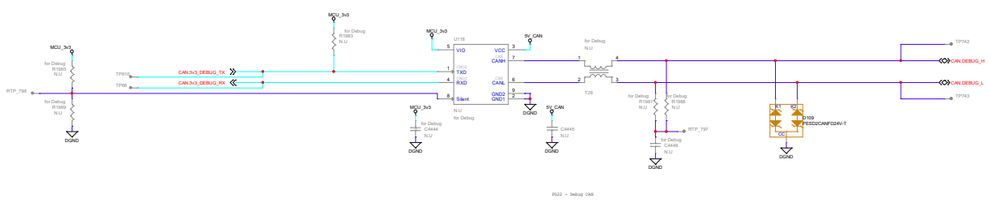

Flexray Transceiver With Wakeup

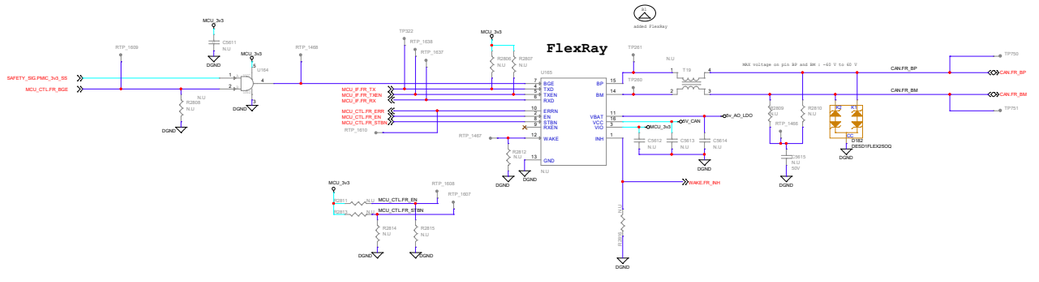

PCB001289_PRIMARY_C1_V14

Project: PRI C Sample		Board: PCB001281	
Project version: 1.0	Design: CANFD		
Sheet: 4 of: 22	Classification: Confidential		
Size: A0	Document Number: <Doc>		
	Date	Time	Signature
Designed: Ilan Braun	Sunday, November 09, 2025		
Checked: Alon Rotman	<C, Date>		
Approved: <Approved>	<A, Date>		

Mobileye Vision Technologies
13 Hartom St., Jerusalem 91450
Tel: +972(0)3-541-7333
Fax: +972(0)3-541-7500
Site: www.Mobileye.com

Heater 12V @ 45W Power Switch

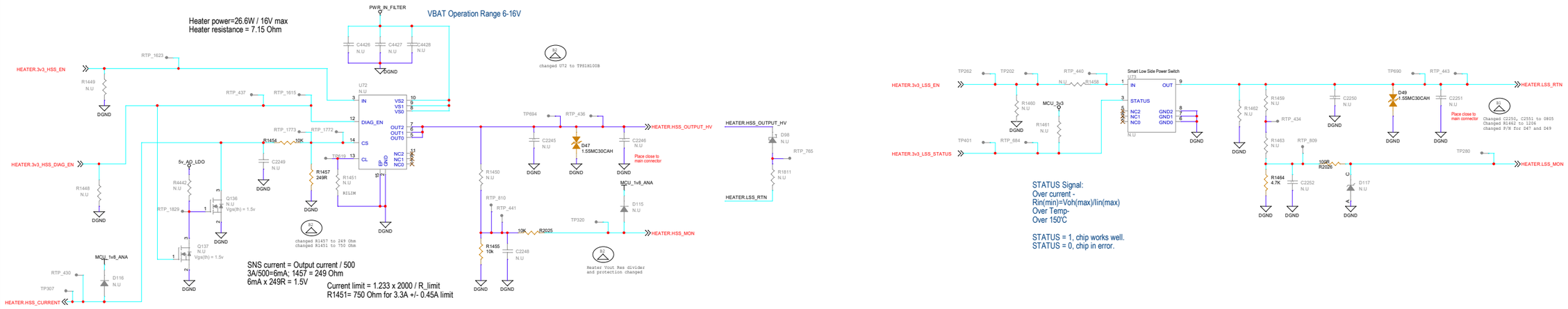

USS

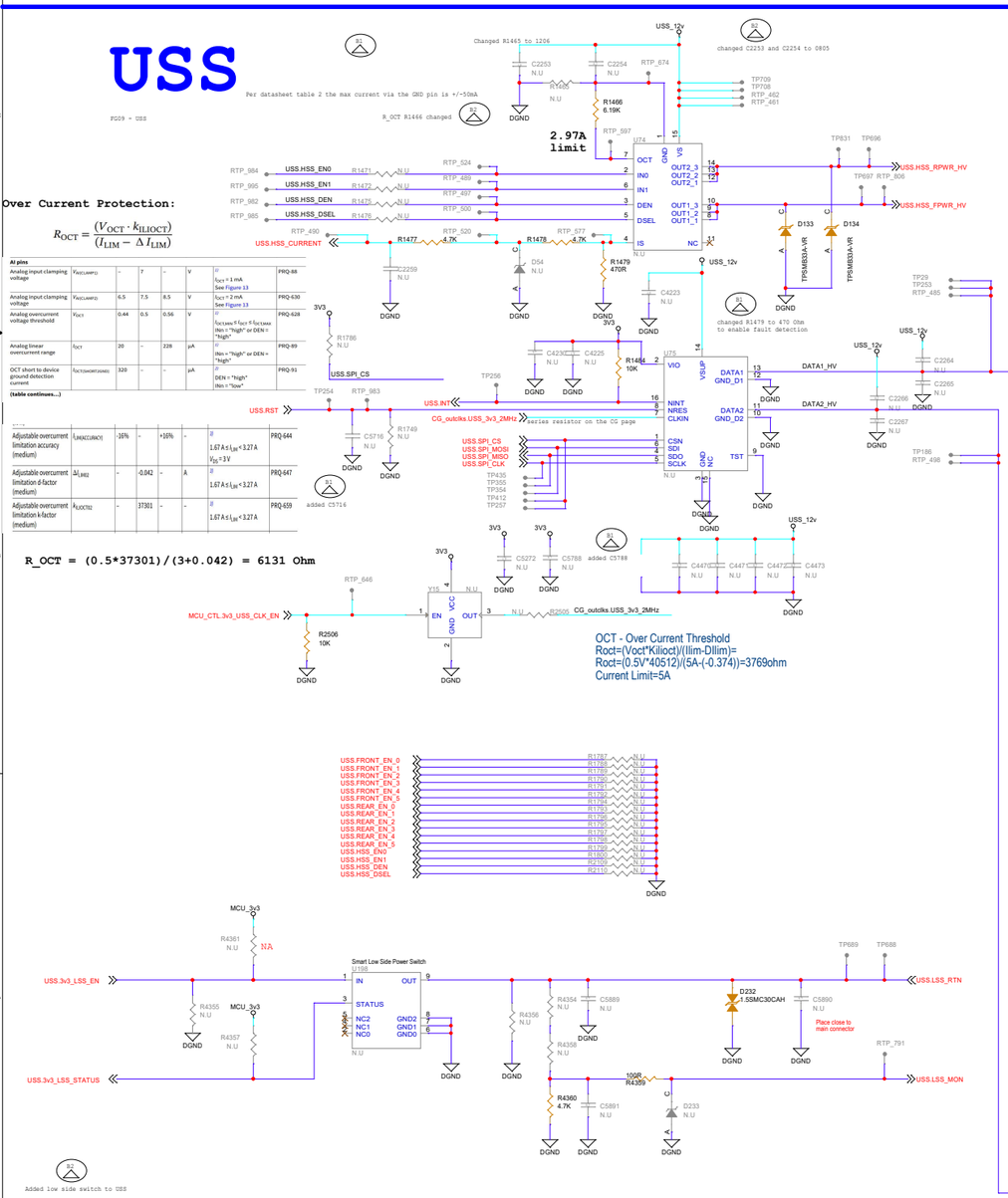

FRONT USS

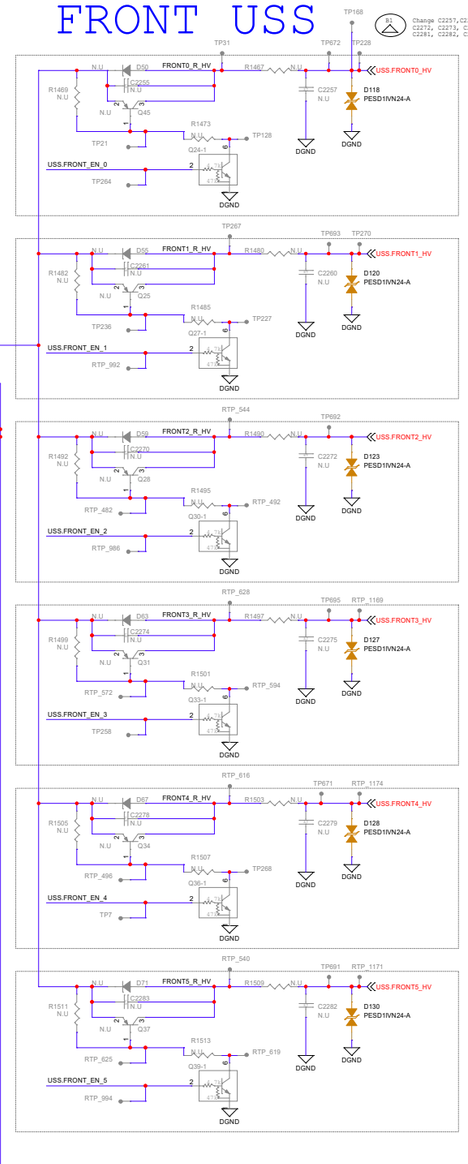

REAR USS

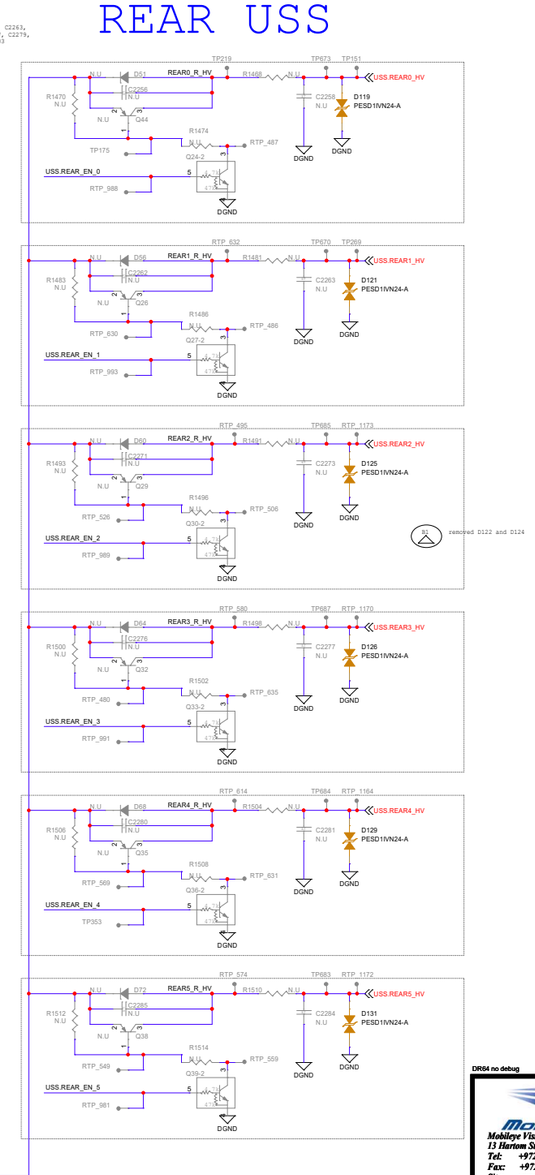

DR64 no debug

PCB001289_PRIMARY_C1_V14 /

MOBILEYE
Mobileye Vision Technologies
13 Hartom St., Jerusalem 91450
Tel: +972(0)2-541-7333
Fax: +972(0)2-541-7300
Site: www.Mobileye.com

Project:	PRI C Sample	Board:	PCB001281
Project version:	1.0	Design:	HSS/HEATER
Sheet: 5	of: 22	Classification:	Confidetial
Size:	A1	Document Number:	<Doc>

	Name	Date	Signature
Designed:	Ilan Braun	Sunday, November 09, 2025	
Checked:	Alon Rotman	<C. Date>	
Approved:	<Approved>	<A. Date>	

MAIN BATTERY INPUT PROTECTION

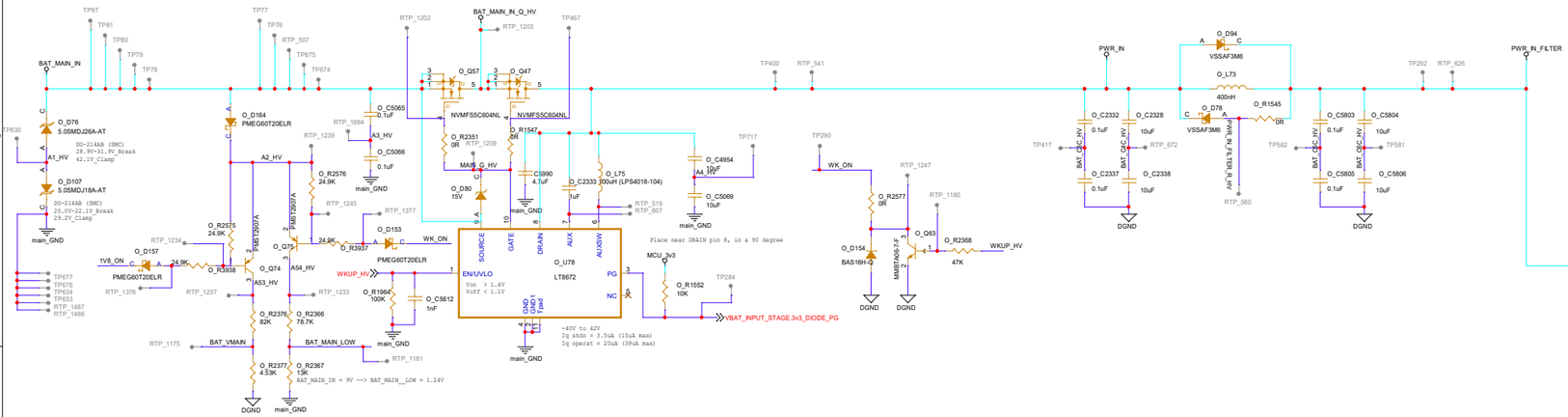

Vbat

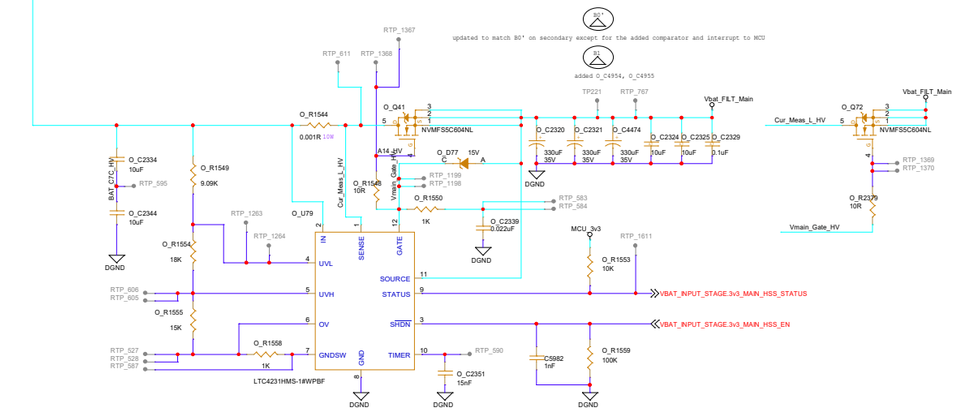

REDUNDANT BATTERY INPUT PROTECTION

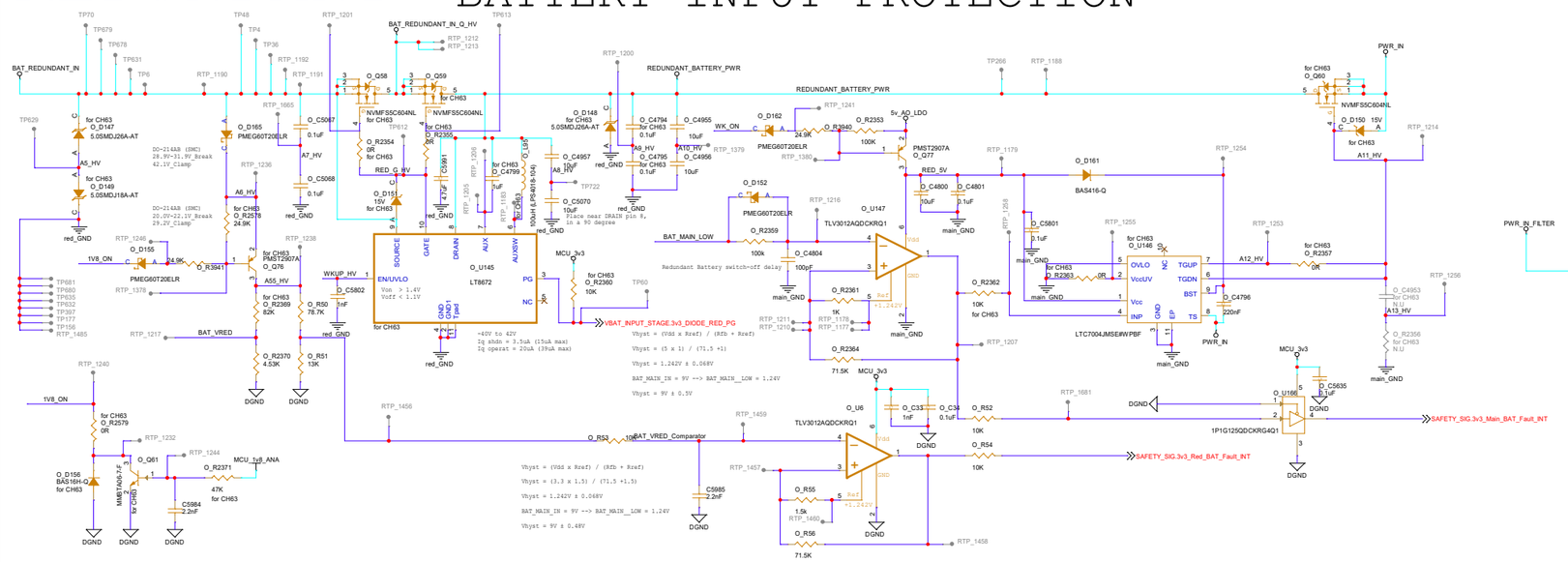

MCU

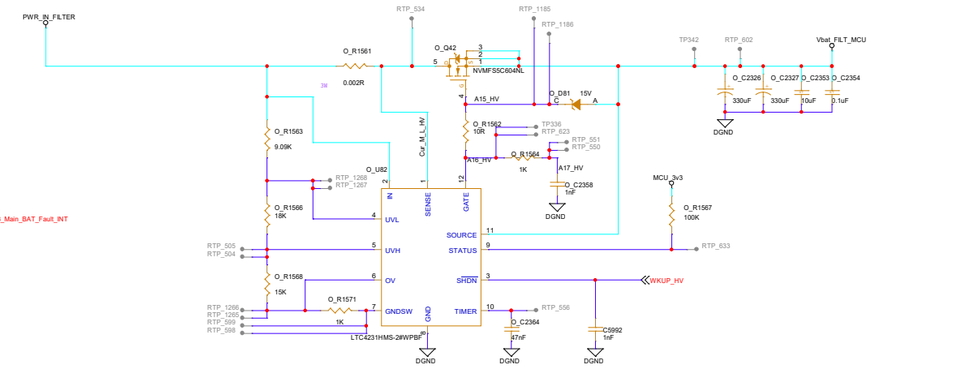

VOLTAGE CURRENT SENSE

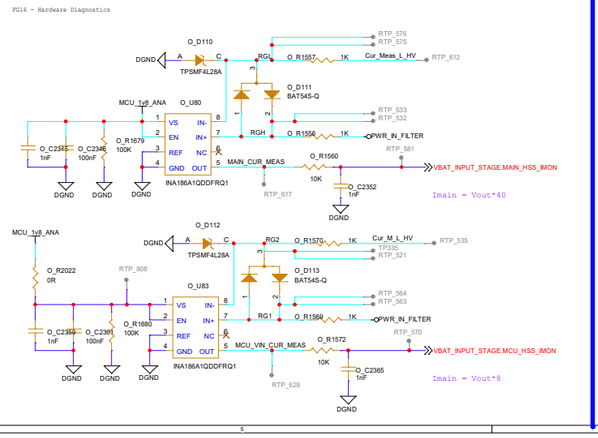

MONITOR

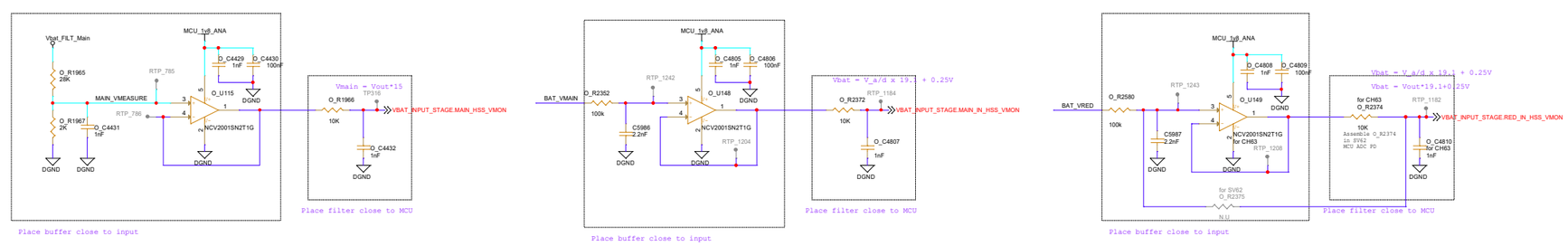

DR84 no debug

PCB001289_PRIMARY_C1_V14 /

Mobileye
Mobileye Vision Technologies
13 Hartom St., Jerusalem 91450
Tel: +972(0)2-541-7333
Fax: +972(0)2-541-7300
Site: www.Mobileye.com

Project:	PRI C Sample	Board:	PCB001281
Project version:	1.0	Design:	Battery_Input
Sheet: 6	of: 22	Classification:	Confidetial
Size: A1	Document Number:	<Doc>	

	Name	Date	Signature
Designed:	Ilan Braun	Sunday, November 09, 2025	
Checked:	Alon Rotman	<C. Date>	
Approved:	<Approved>	<A. Date>	

FG20 - BATT FLT

System wake-up circuit

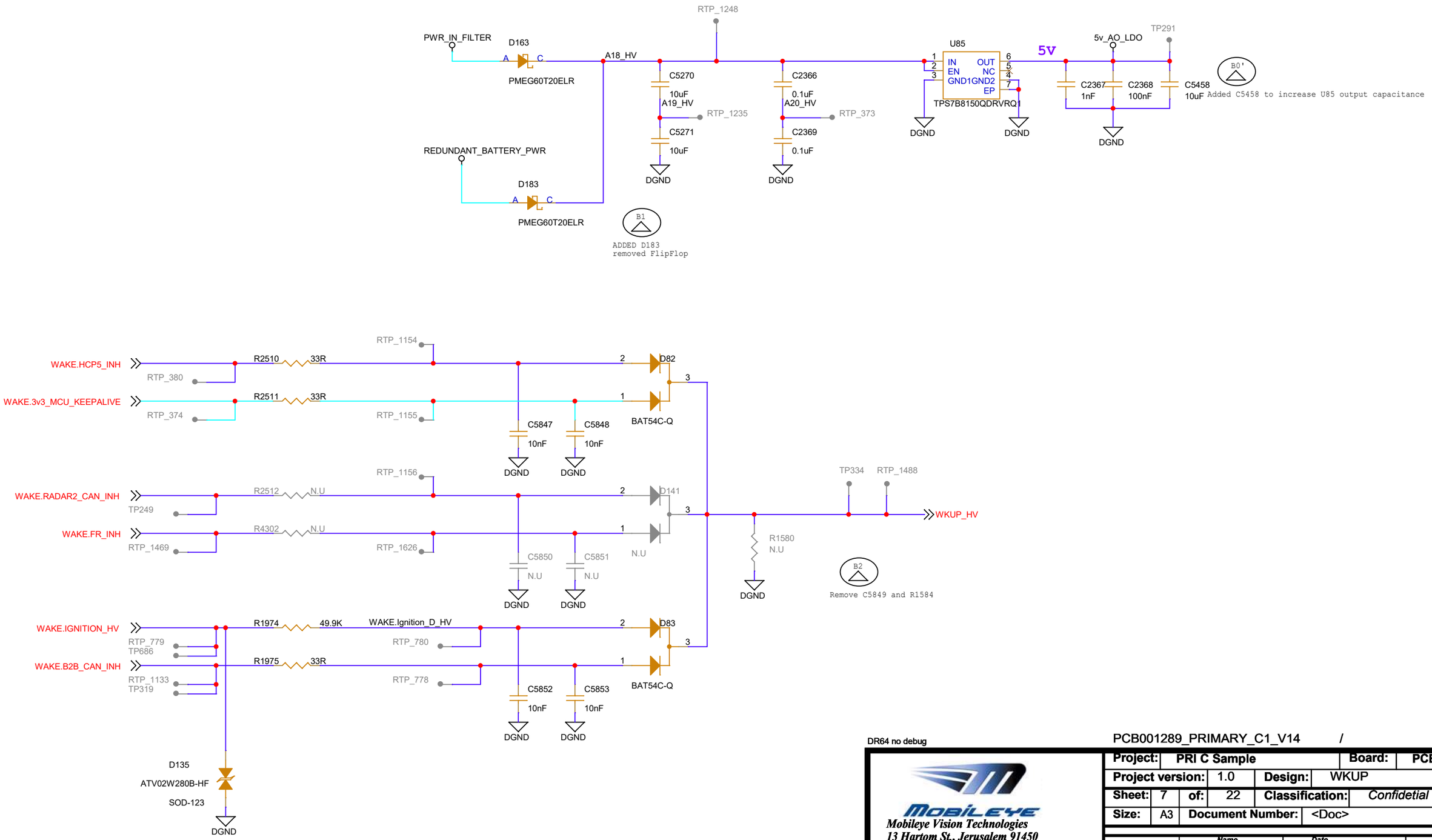

DR64 no debug

PCB001289_PRIMARY_C1_V14 /

Mobileye Vision Technologies
13 Hartom St., Jerusalem 91450
Tel: +972(0)2-541-7333
Fax: +972(0)2-541-7300
Site: www.Mobileye.com

Project:	PRI C Sample	Board:	PCB001281
Project version:	1.0	Design:	WKUP
Sheet: 7	of: 22	Classification:	Confidetial
Size:	A3	Document Number:	<Doc>

	Name	Date	Signature
Designed:	Ilan Braun	Sunday, November 09, 2025	
Checked:	Alon Rotman	<C. Date>	
Approved:	<Approved>	<A. Date>	

FG21 - wake up

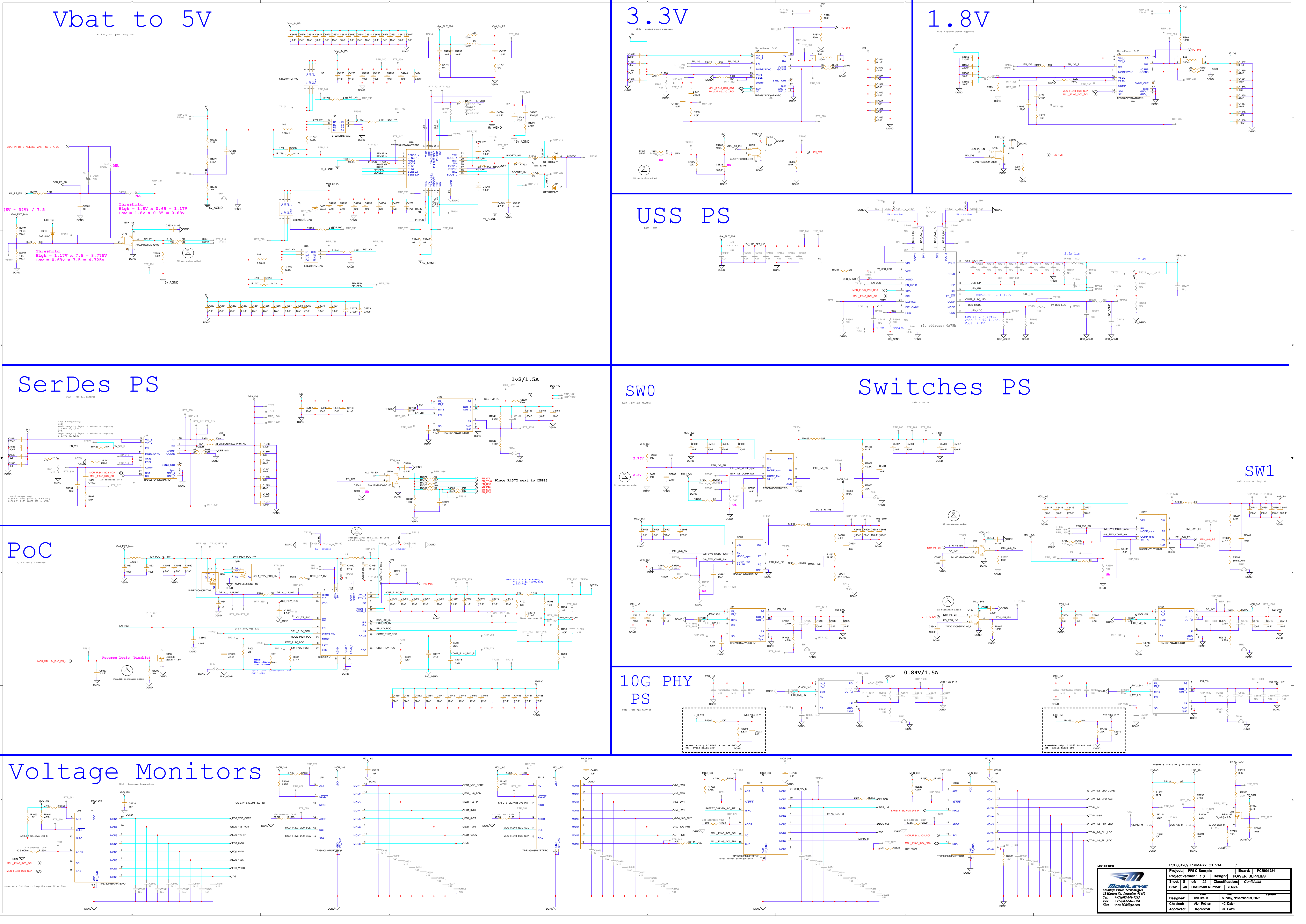
Vbat to 5V
3.3V
1.8V
USS PS
SerDes PS
1v2/1.5A
SW0
Switches PS
SW1
PoC
Reverse logic (Disable)
10G PHY PS
0.84V/1.5A
Voltage Monitors
Threshold:
High = 1.8V x 0.65 = 1.17V
Low = 1.8V x 0.35 = 0.63V
(6V - 34V) / 7.5
Threshold:
High = 1.17V x 7.5 = 8.775V
Low = 0.63V x 7.5 = 4.725V
Place R4372 next to C5883
DR64 no debug
PCB001289_PRIMARY_C1_V14 /
Mobileye Vision Technologies
13 Hartom St., Jerusalem 91450
Tel: +972(0)2-541-7333
Fax: +972(0)2-541-7300
Site: www.Mobileye.com
Project: PRI C Sample
Board: PCB001281
Project version: 1.0
Design: POWER_SUPPLIES
Sheet: 8 of: 22
Classification: Confidetial
Size: A0
Document Number: <Doc>
Designed: Ilan Braun Sunday, November 09, 2025
Checked: Alon Rotman <C. Date>
Approved: <Approved> <A. Date>

EQ0 Clock Generator

FG02 - EyeQ0 Subsystem

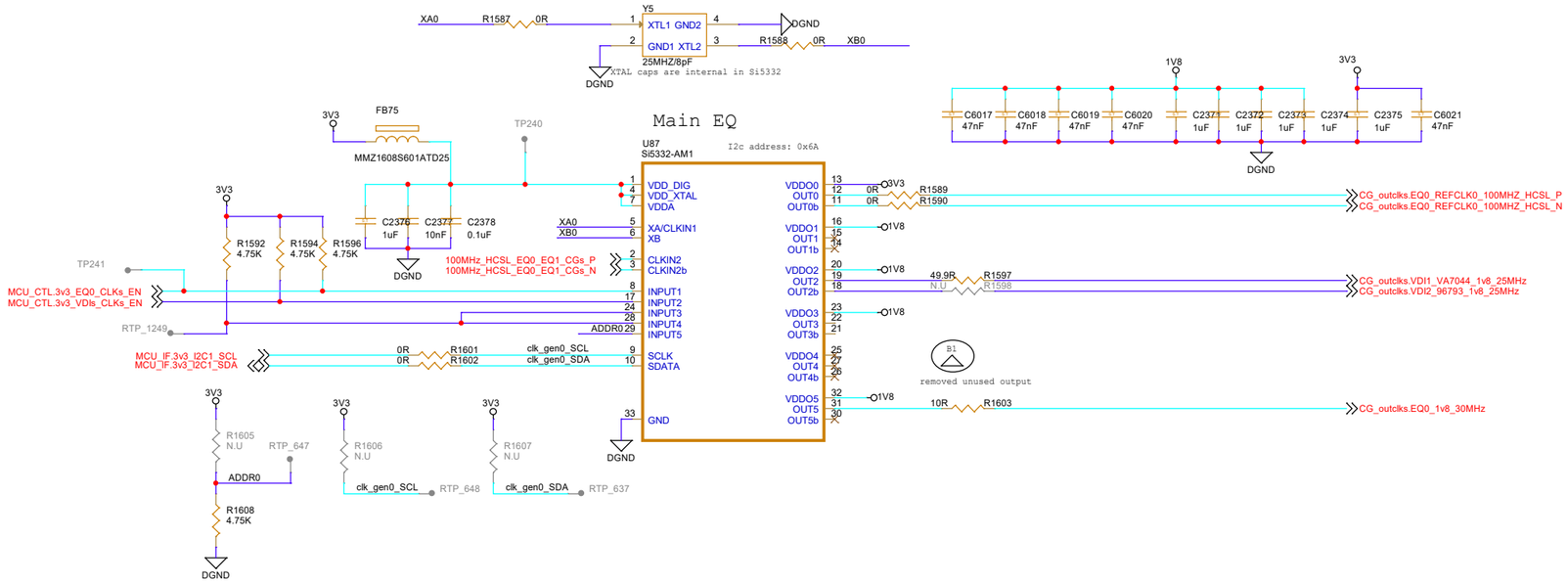

EQ1 Clock Generator

FG03 - EyeQ1 Subsystem

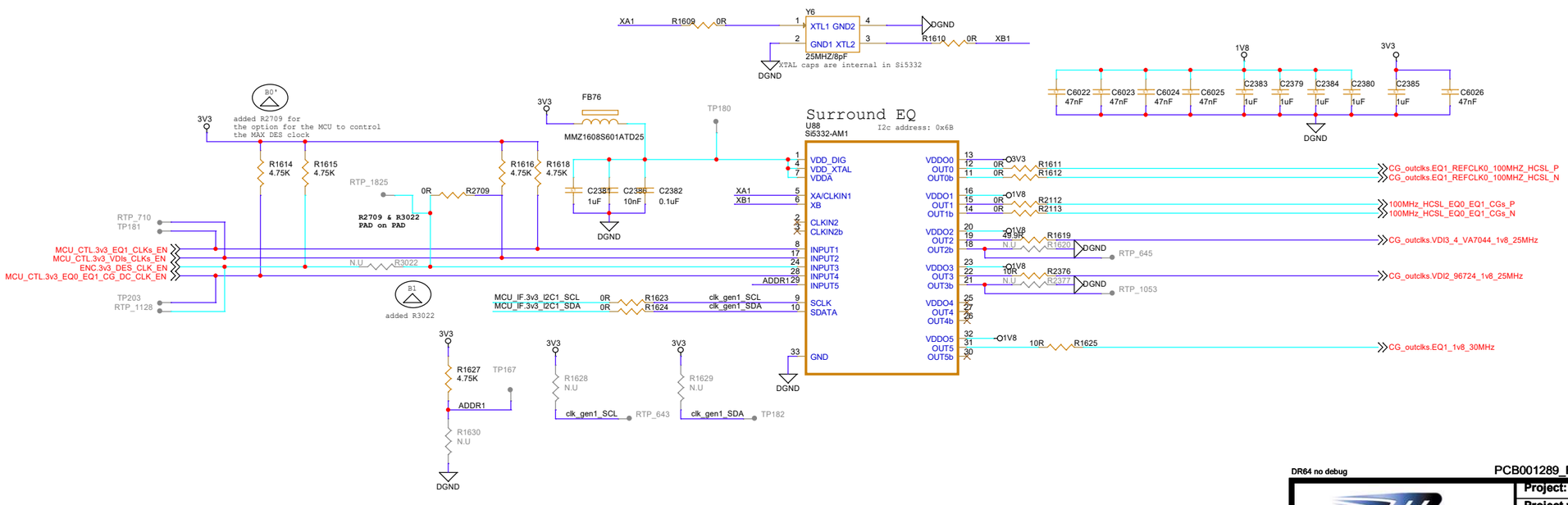

DR64 no debug

PCB001289_PRIMARY_C1_V14 /

Mobileye Vision Technologies
13 Hartom St., Jerusalem 91450
Tel: +972(0)2-541-7333
Fax: +972(0)2-541-7300
Site: www.Mobileye.com

Project:	PRI C Sample	Board:	PCB001281
Project version:	1.0	Design:	CLOCK
Sheet: 9	of: 22	Classification:	Confidetial
Size: A2	Document Number:	<Doc>	

	Name	Date	Signature
Designed:	Ilan Braun	Sunday, November 09, 2025	
Checked:	Alon Rotman	<C. Date>	
Approved:	<Approved>	<A. Date>	

POWER

FG01 - MXP Controller

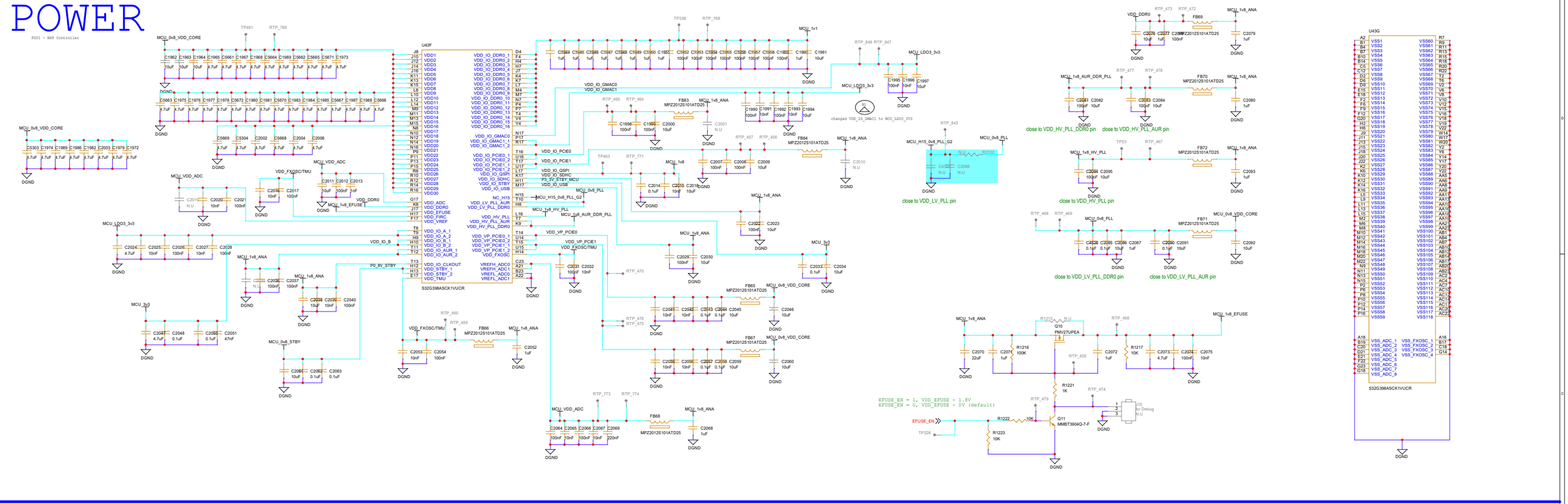

PMIC

FG11 - MCU PMIC

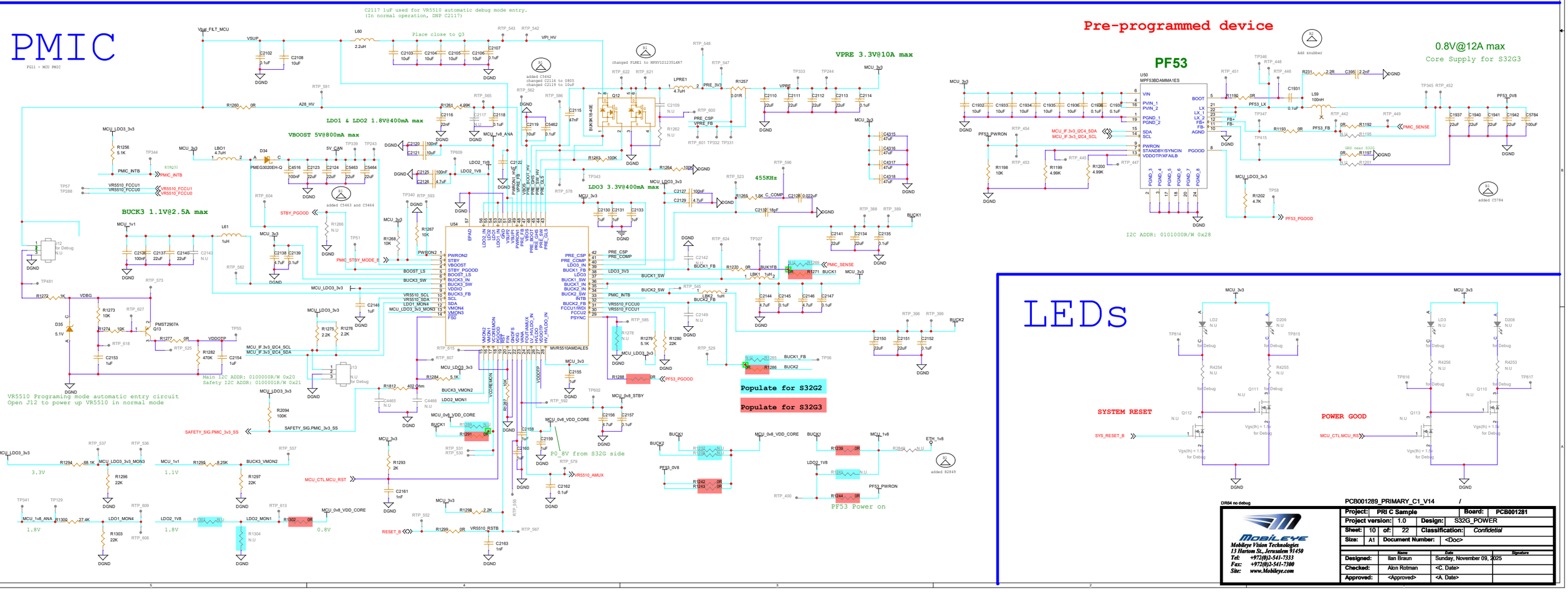

LEDs

DR84 no debug

PCB001289_PRIMARY_C1_V14 /

Mobileye Vision Technologies
13 Hartom St., Jerusalem 91450
Tel: +972(0)2-541-7333
Fax: +972(0)2-541-7300
Site: www.Mobileye.com

Project:	PRI C Sample	Board:	PCB001281
Project version:	1.0	Design:	S32G_POWER
Sheet: 10 of: 22		Classification:	Confidetial
Size: A1	Document Number:	<Doc>	

	Name	Date	Signature
Designed:	Ilan Braun	Sunday, November 09, 2025	
Checked:	Alon Rotman	<C. Date>	
Approved:	<Approved>	<A. Date>	

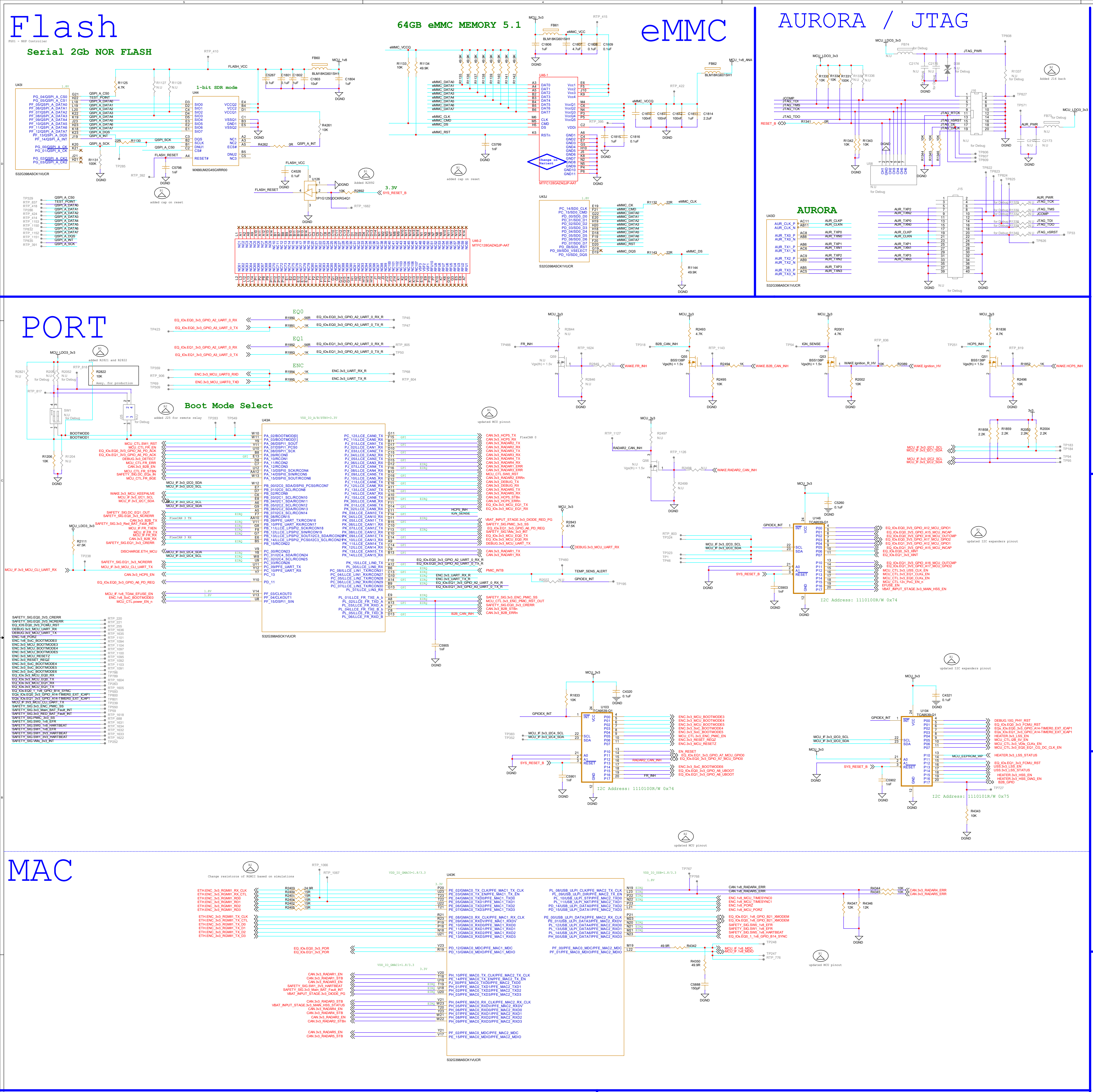

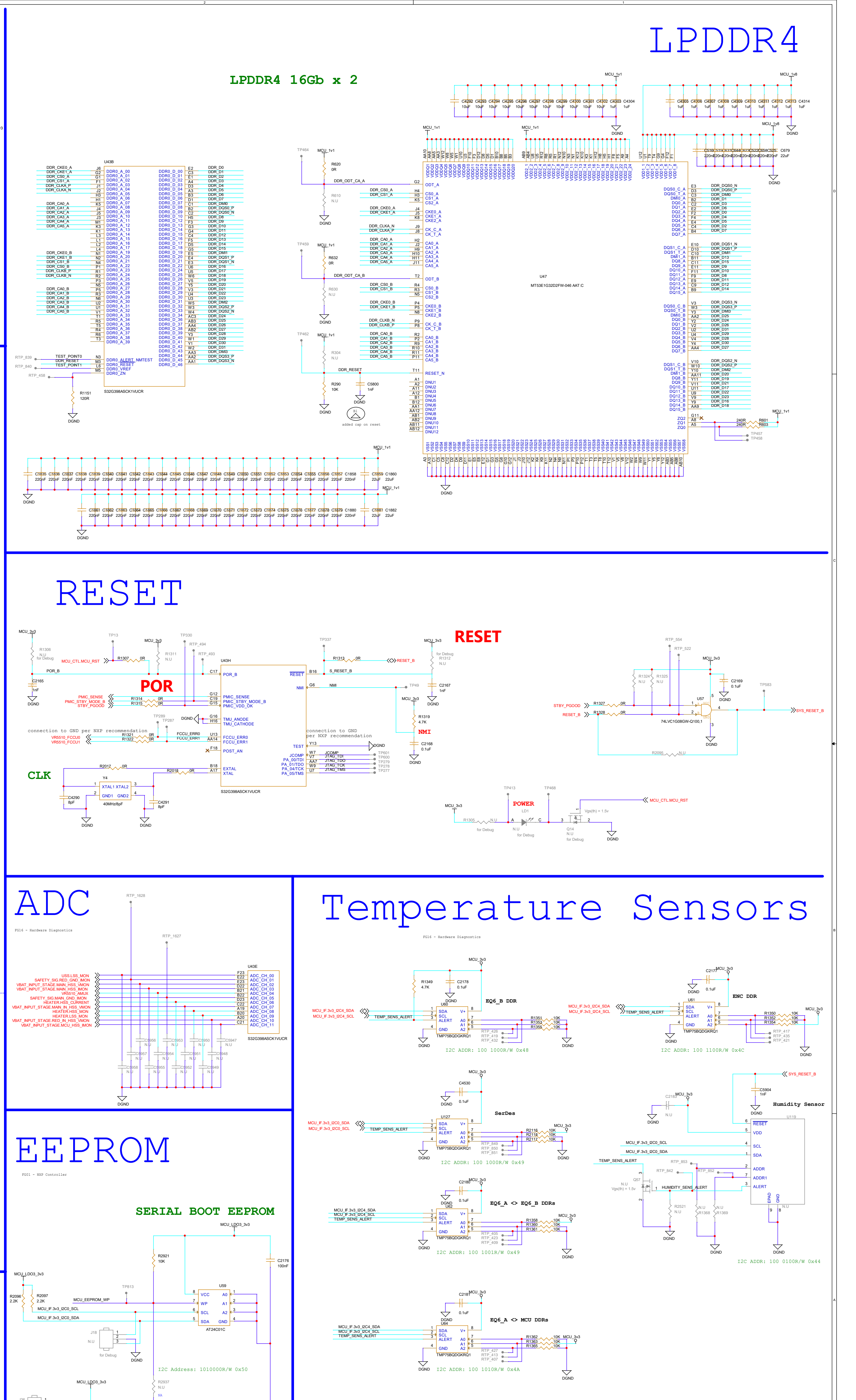

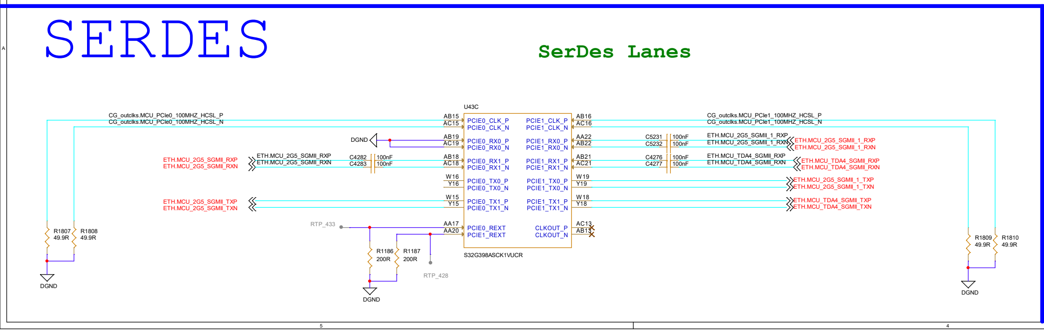

BOOT Modes

Table 1. BMODE configuration

FUSE_SEL	BMODE1	BMODE2	Boot Mode	Available Boot Interfaces	Use Case
0 (Fuse not blown)	0	0	Serial Boot, XOSC configured in differential bypass mode*	Serial communication interfaces: LIN (UART) and CAN	
	0	1	Serial Boot, XOSC in Crystal mode or Bypass mode	Serial communication interfaces: LIN (UART) and CAN	Production config for virgin devices
	1	0	Boot from external memory using RCON configurations	Memory interfaces: QSPI, SD card, MMC, eMMC	Development config
1 (Fuse blown)	0	X	Boot from external memory using Fuse configuration	Memory interfaces: QSPI, SD card, MMC, eMMC	Production config for programmed devices
	1	0	Serial Boot	Serial communication interfaces: LIN (UART) and CAN	Debug of programmed device
X	1	1	Reserved		

DR64 no debug

PCB001289_PRIMARY_C1_V14 /

Mobileye Vision Technologies
13 Hartom St., Jerusalem 91450
Tel: +972(0)2-541-7333
Fax: +972(0)2-541-7300
Site: www.Mobileye.com

Project:	PRI C Sample	Board:	PCB001281
Project version:	1.0	Design:	MCU
Sheet:	11 of: 22	Classification:	Confidetial
Size:	A0	Document Number:	<Doc>

	Name	Date	Signature
Designed:	Ilan Braun	Thursday, November 20, 2025	
Checked:	Alon Rotman	<C. Date>	
Approved:	<Approved>	<A. Date>	

EyeQ 0

added A_045, A_046, A_047

P104 - Power EyeQ0 subsystem

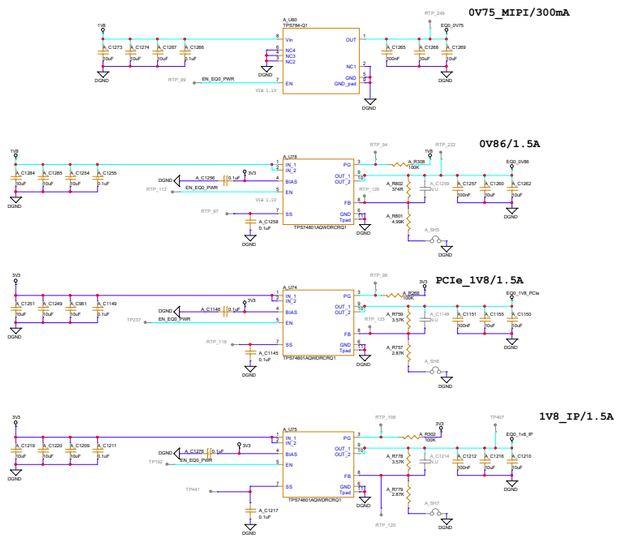

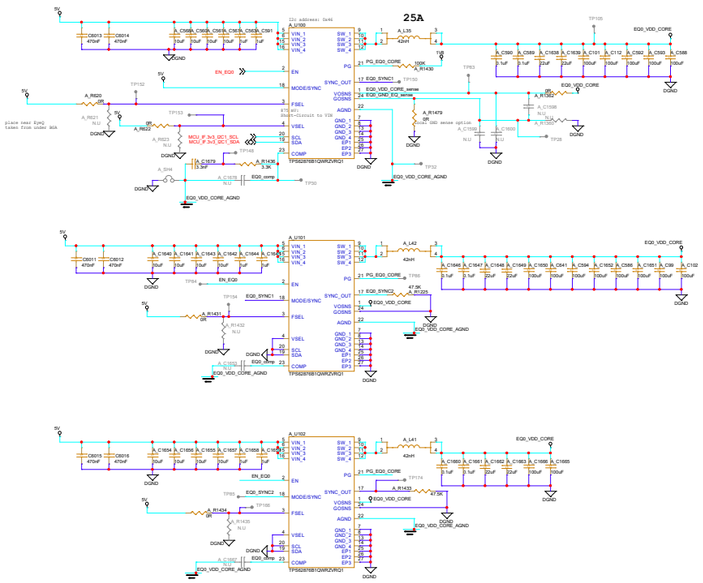

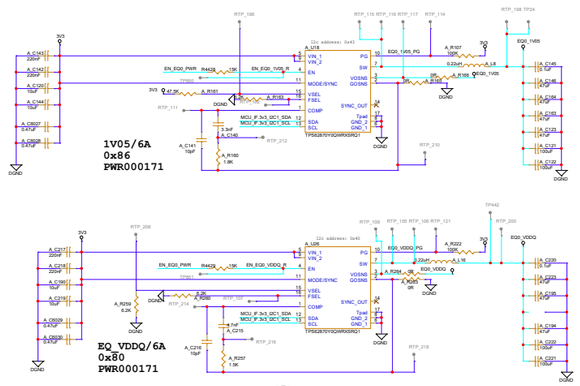

EyeQ 1

added B_045, B_046, B_047

P105 - Power EyeQ1 subsystem

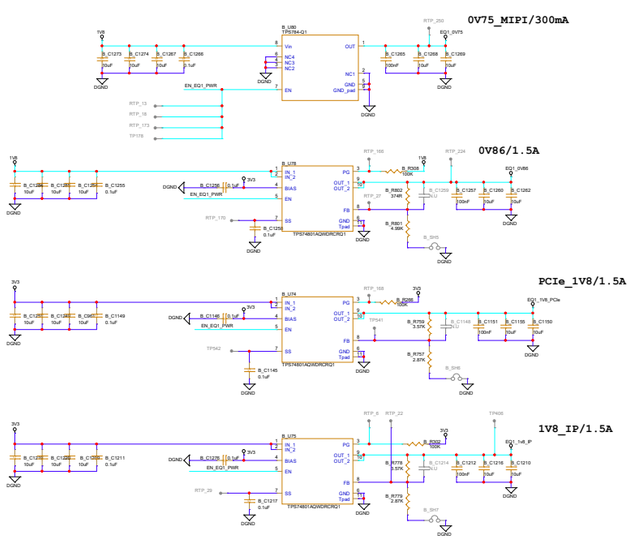

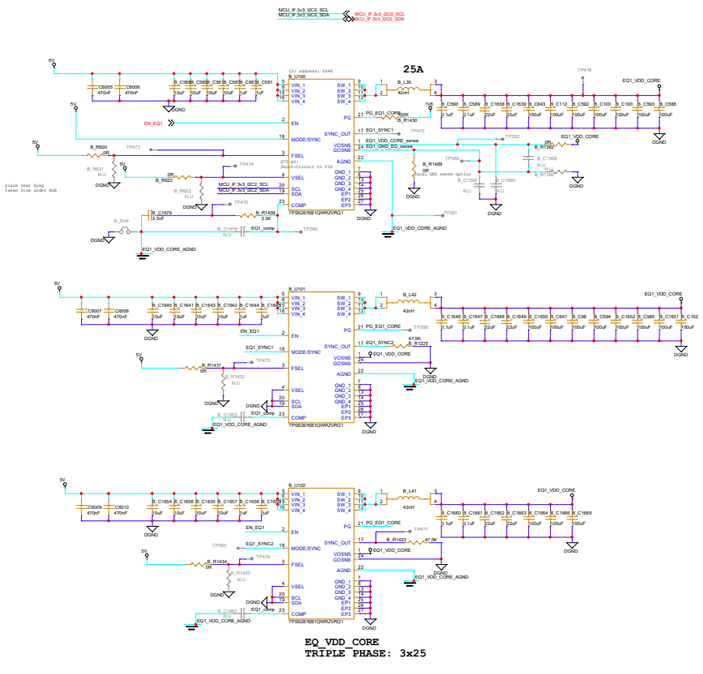

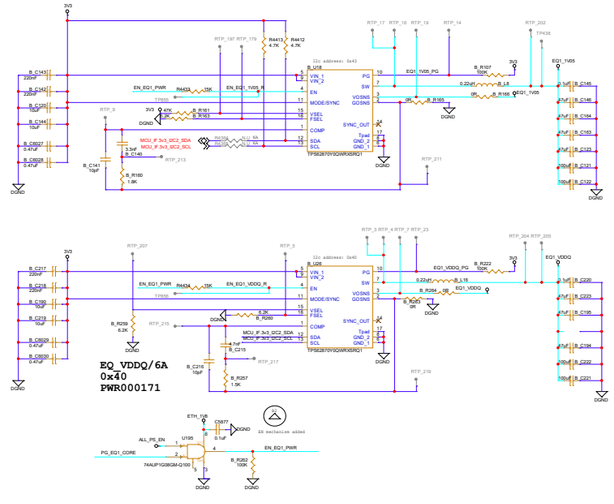

Mobileye Vision Technologies
13 Hartom St., Jerusalem 91450
Tel: +972(0)2-541-7333
Fax: +972(0)2-541-7500
Site: www.Mobileye.com

DRM no debug

PCB001289_PRIMARY_C1_V14 /

Project:	PRI C Sample	Board:	PCB001281
Project version:	1.0	Design:	EyeQ5H_POWER_SUPPLIES
Sheet: 12	of: 22	Classification:	Confidential
Size: A0	Document Number:	<Doc>	

	Name	Date	Signature
Designed:	Ilan Braun	Sunday, November 09, 2025	
Checked:	Alon Rotman	<C. Date>	
Approved:	<Approved>	<A. Date>	

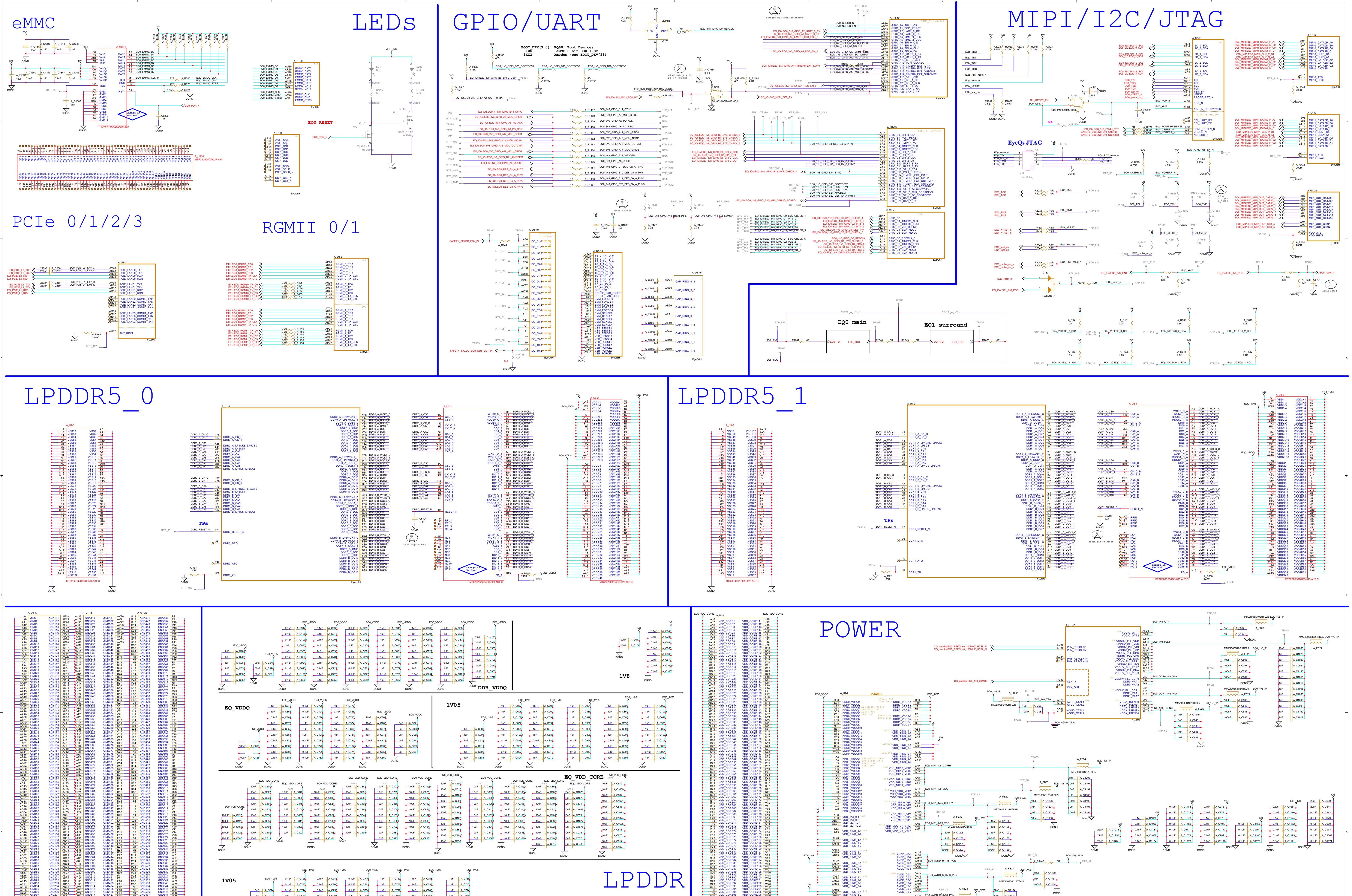

DR64 no debug

PCB001289_PRIMARY_C1_V14 /

Project:	PRI C Sample			Board:	PCB001281
Project version:	1.0	Design:	EyeQ6H_0		
Sheet:	13	of:	22	Classification:	Confidetial
Size:	A0	Document Number:	<Doc>		

	Name	Date	Signature
Designed:	Ilan Braun	Sunday, November 09, 2025	
Checked:	Alon Rotman	<C. Date>	
Approved:	<Approved>	<A. Date>	

Mobileye Vision Technologies
13 Hartom St., Jerusalem 91450
Tel: +972(0)2-541-7333
Fax: +972(0)2-541-7300
Site: www.Mobileye.com

G02 - EyeQ0 Subsystem

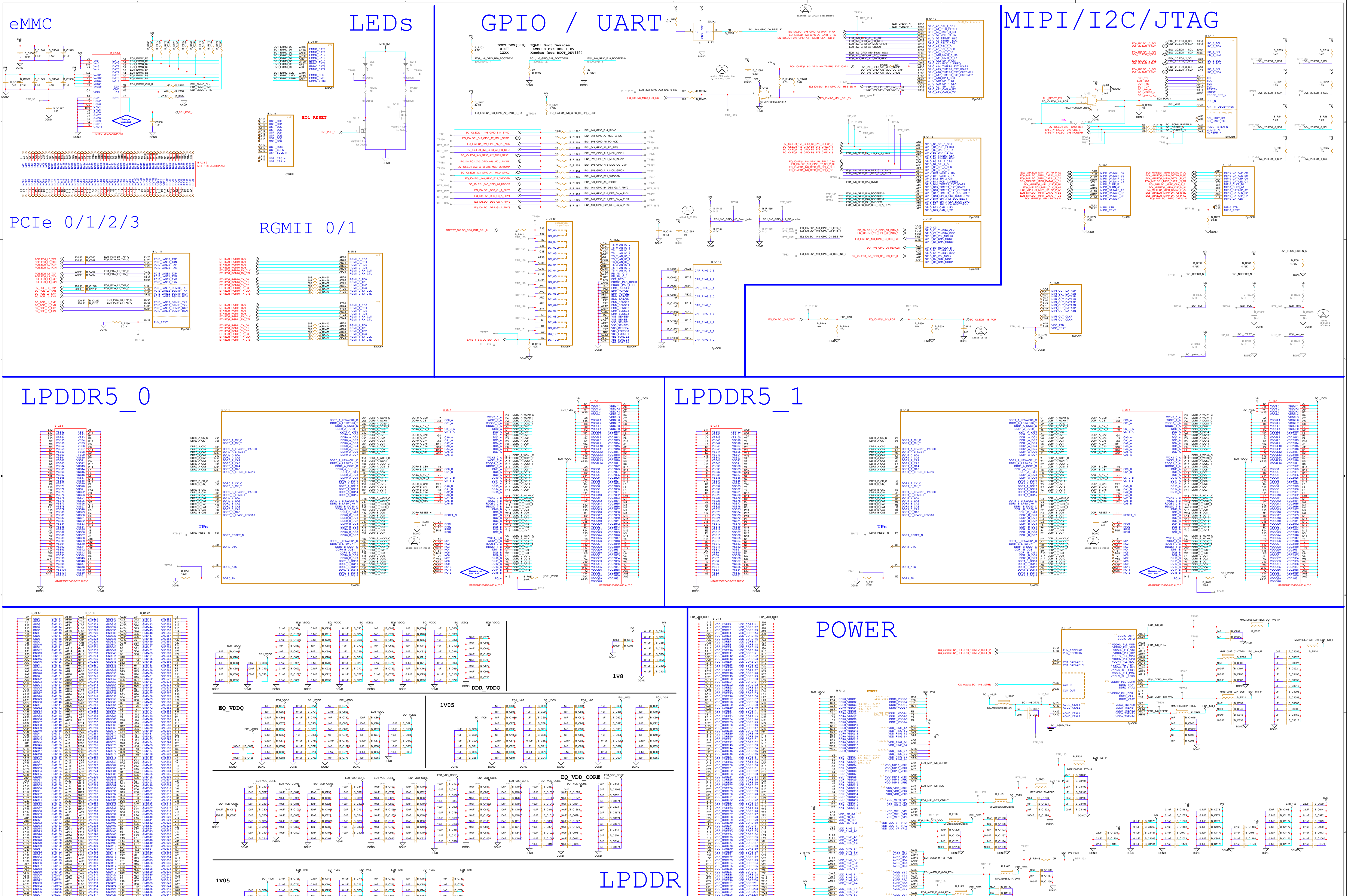

DR64 no debug

PCB001289_PRIMARY_C1_V14 /

Mobileye Vision Technologies
13 Hartom St., Jerusalem 91450
Tel: +972(0)2-541-7333
Fax: +972(0)2-541-7300
Site: www.Mobileye.com

Project:	PRI C Sample	Board:	PCB001281
Project version:	1.0	Design:	EyeQ6H_1
Sheet: 14	of: 22	Classification:	Confidetial
Size: A0	Document Number:	<Doc>	

	Name	Date	Signature
Designed:	Ilan Braun	Sunday, November 09, 2025	
Checked:	Alon Rotman	<C. Date>	
Approved:	<Approved>	<A. Date>	

SW0

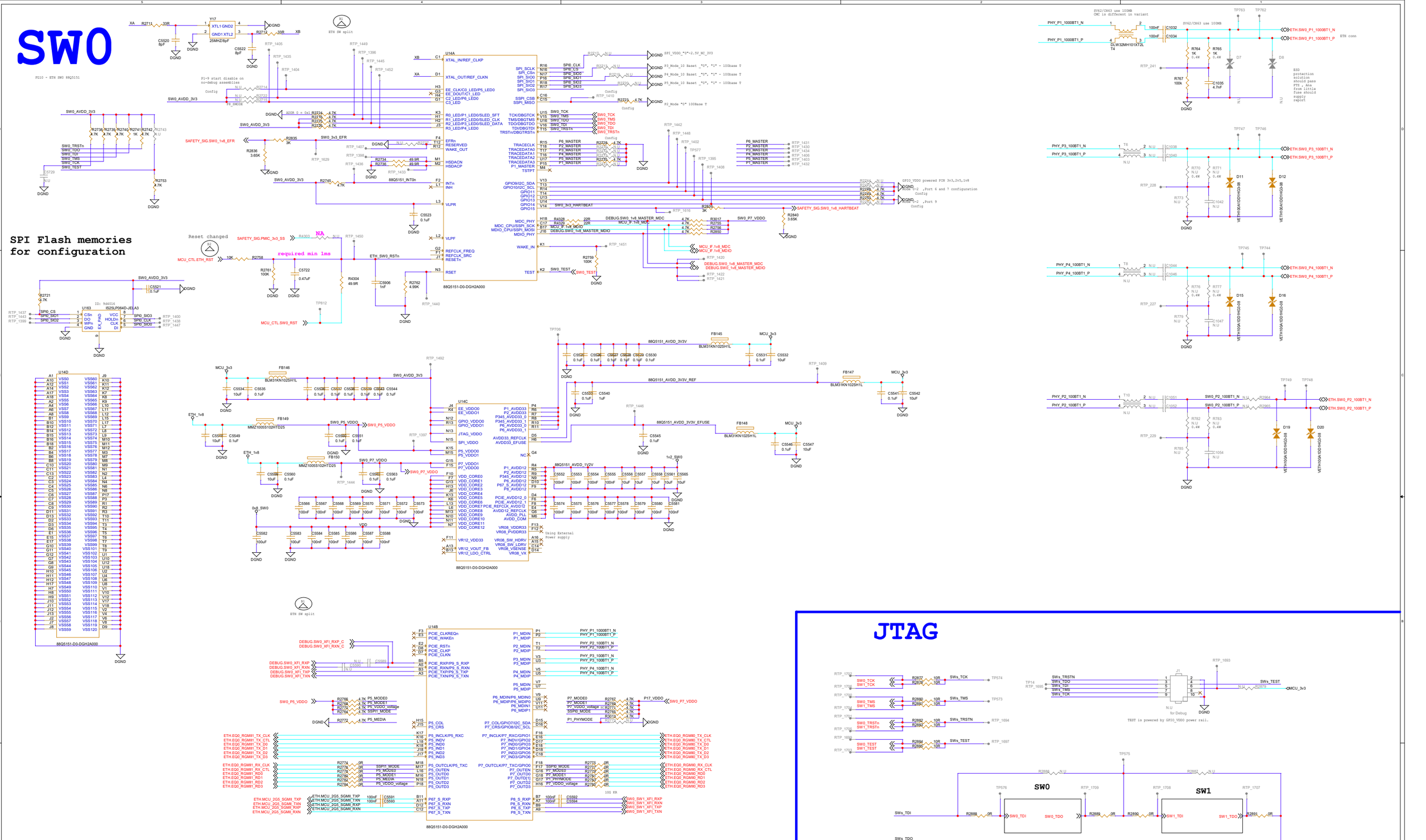

JTAG

DR84 no debug

PCB001289_PRIMARY_C1_V14 /

Mobileye Vision Technologies
13 Hartom St., Jerusalem 91450
Tel: +972(0)2-541-7333
Fax: +972(0)2-541-7300
Site: www.Mobileye.com

Project:	PRI C Sample	Board:	PCB001281
Project version:	1.0	Design:	ETH_SW0
Sheet: 15	of: 22	Classification:	Confidetial
Size: A1	Document Number:	<Doc>	

	Name	Date	Signature
Designed:	Ilan Braun	Monday, November 10, 2025	
Checked:	Alon Rotman	<C. Date>	
Approved:	<Approved>	<A. Date>	

SW1

FG35 - ETH SW1 88Q5151

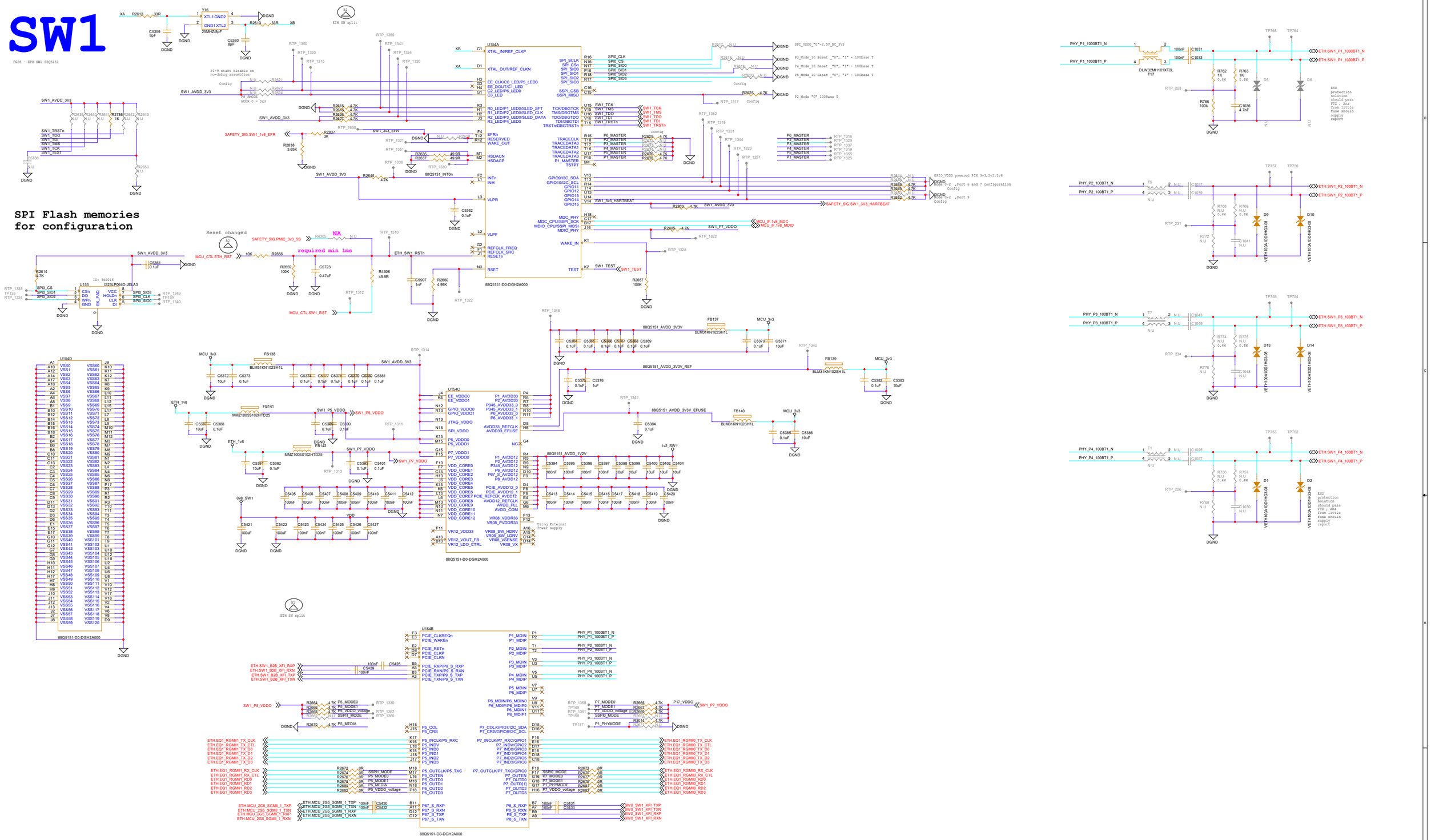

DR84 no debug

PCB001289_PRIMARY_C1_V14 /

Mobileye Vision Technologies
13 Hartom St., Jerusalem 91450
Tel: +972(0)2-541-7333
Fax: +972(0)2-541-7300
Site: www.Mobileye.com

Project:	PRI C Sample	Board:	PCB001281
Project version:	1.0	Design:	ETH_SW1
Sheet: 16	of: 22	Classification:	Confidetial
Size: A1	Document Number:	<Doc>	

	Name	Date	Signature
Designed:	Ilan Braun	Monday, November 10, 2025	
Checked:	Alon Rotman	<C. Date>	
Approved:	<Approved>	<A. Date>	

10G PHY

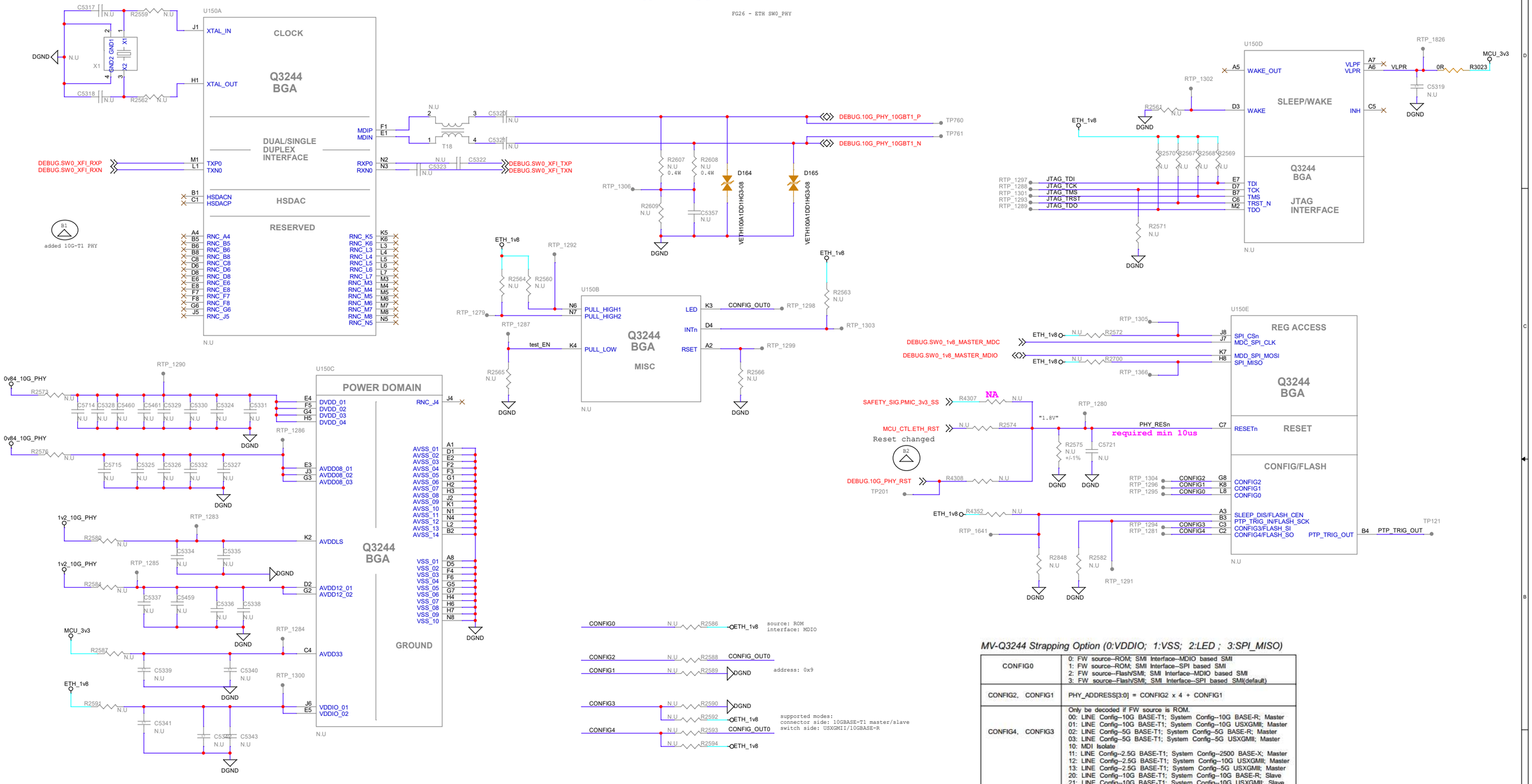

MV-Q3244 Strapping Option (0:VDDIO; 1:VSS; 2:LED ; 3:SPI_MISO)

CONFIG0	0: FW source--ROM; SMI Interface--MDIO based SMI 1: FW source--ROM; SMI Interface--SPI based SMI 2: FW source--Flash/SMI; SMI Interface--MDIO based SMI 3: FW source--Flash/SMI; SMI Interface--SPI based SMI(default)
CONFIG2, CONFIG1	PHY_ADDRESS[3:0] = CONFIG2 x 4 + CONFIG1
CONFIG4, CONFIG3	Only be decoded if FW source is ROM. 00: LINE Config--10G BASE-T1; System Config--10G BASE-R; Master 01: LINE Config--10G BASE-T1; System Config--10G USXGMII; Master 02: LINE Config--5G BASE-T1; System Config--5G BASE-R; Master 03: LINE Config--5G BASE-T1; System Config--5G USXGMII; Master 10: MDI Isolate 11: LINE Config--2.5G BASE-T1; System Config--2500 BASE-X; Master 12: LINE Config--2.5G BASE-T1; System Config--10G USXGMII; Master 13: LINE Config--2.5G BASE-T1; System Config--5G USXGMII; Master 20: LINE Config--10G BASE-T1; System Config--10G BASE-R; Slave 21: LINE Config--10G BASE-T1; System Config--10G USXGMII; Slave 22: LINE Config--5G BASE-T1; System Config--5G BASE-R; Slave 23: LINE Config--5G BASE-T1; System Config--5G USXGMII; Slave 30: Chip Isolate 31: LINE Config--2.5G BASE-T1; System Config--2500 BASE-X; Slave 32: LINE Config--2.5G BASE-T1; System Config--10G USXGMII; Slave 33: LINE Config--2.5G BASE-T1; System Config--5G USXGMII; Slave

DR64 no debug

PCB001289_PRIMARY_C1_V14 /

Mobileye Vision Technologies
13 Hartom St., Jerusalem 91450
Tel: +972(0)2-541-7333
Fax: +972(0)2-541-7300
Site: www.Mobileye.com

Project:	PRI C Sample	Board:	PCB001281
Project version:	1.0	Design:	PHY_10G_DEBUG_MVQ3244
Sheet: 17 of: 22		Classification:	Confidetial
Size:	A2	Document Number:	<Doc>

	Name	Date	Signature
Designed:	Ilan Braun	Monday, November 10, 2025	
Checked:	Alon Rotman	<C. Date>	
Approved:	<Approved>	<A. Date>	

ANALOG POWER

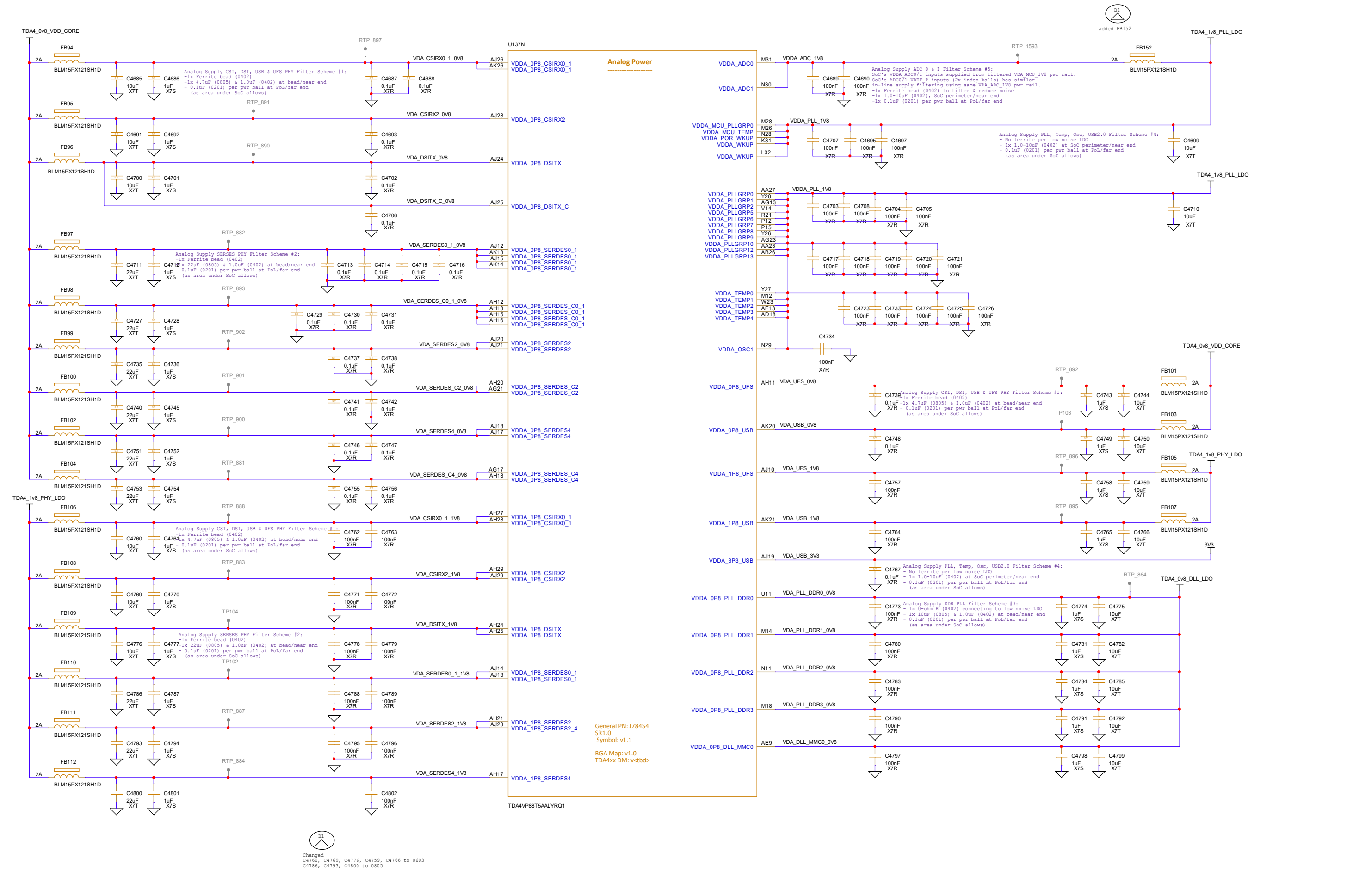

DIGITAL POWER

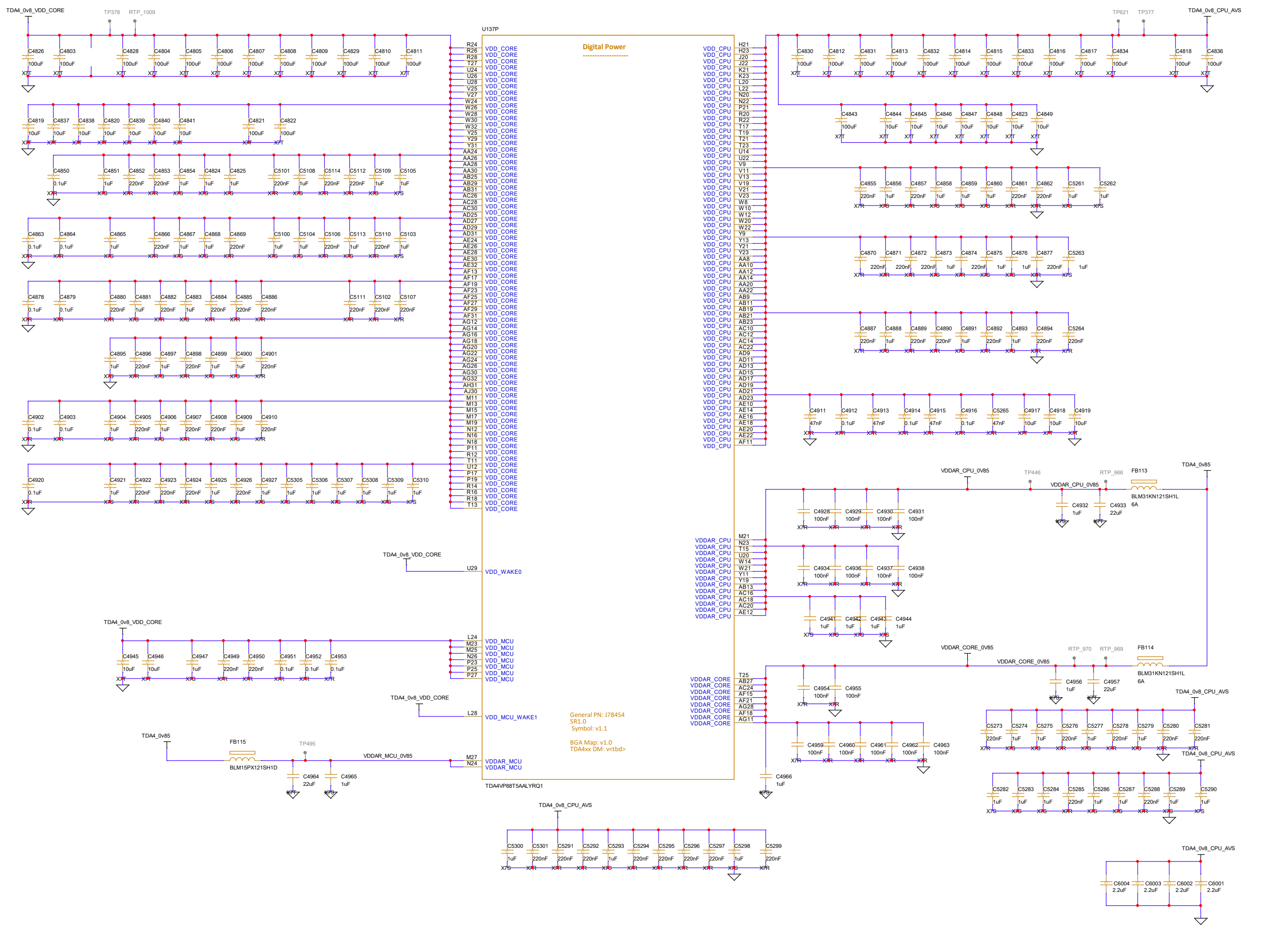

SOC GROUND

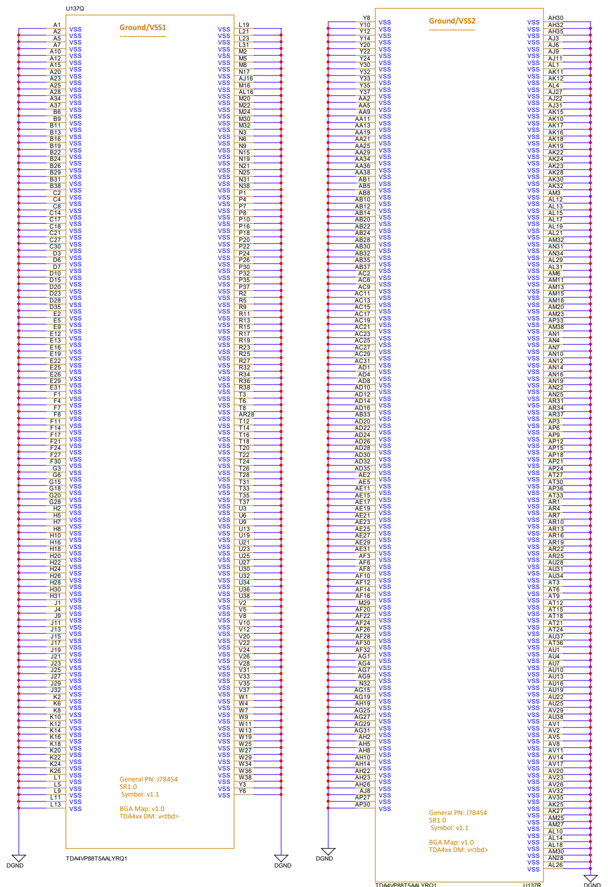

LEO_TPS6594x-Q1

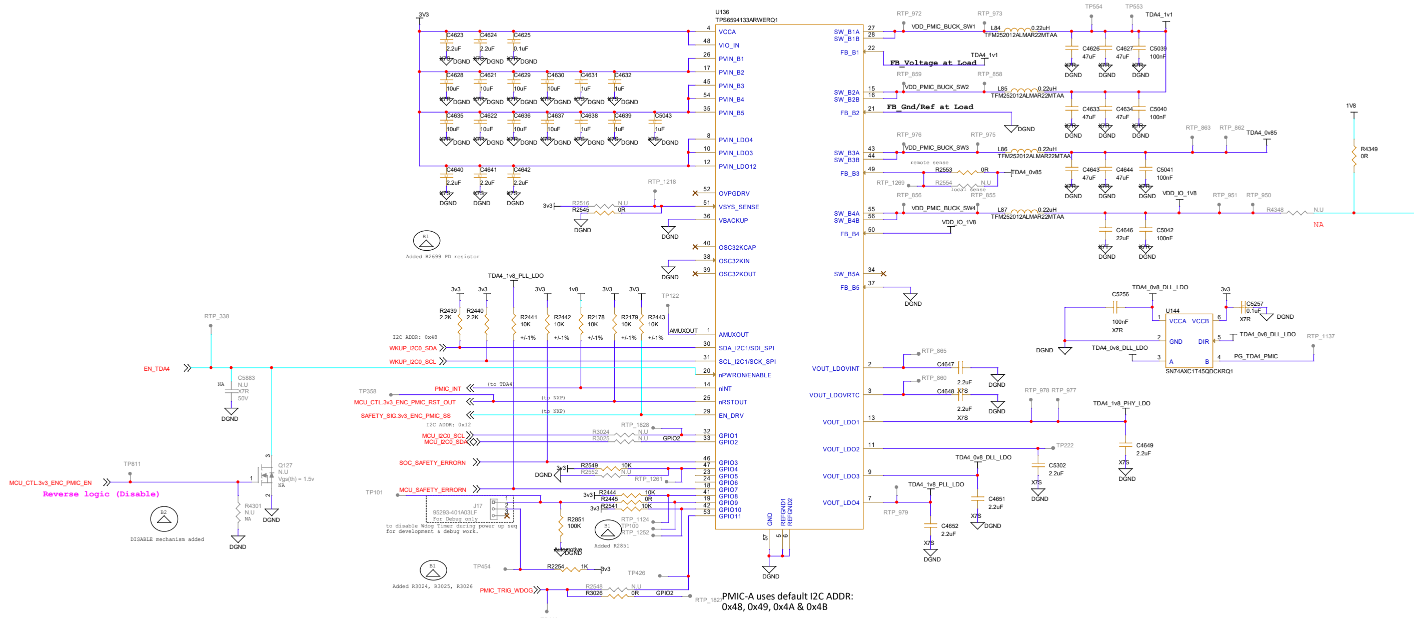

IO POWER

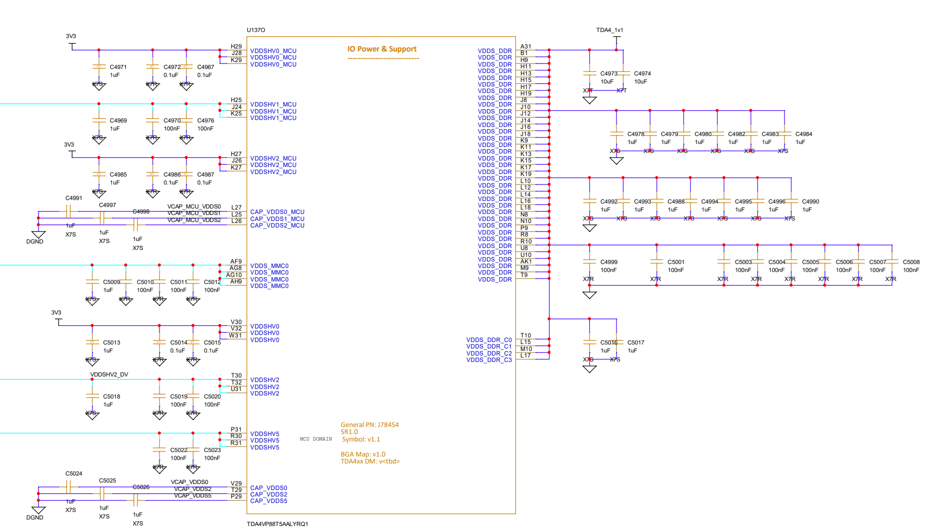

VDD_CORE

VDD_CPU_AVS High-Current Power Stage A (HCPS-A)

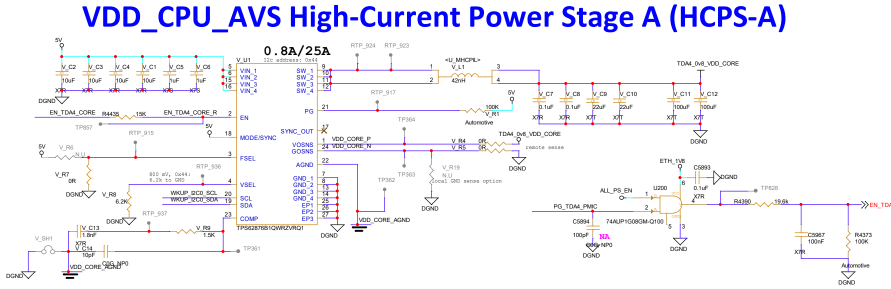

CPU_AVS

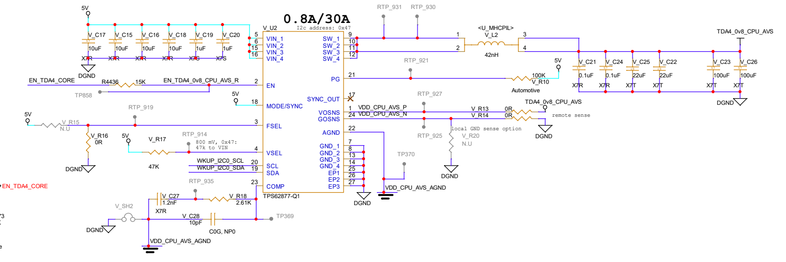

DR64 no debug

PCB001289_PRIMARY_C1_V14 /

Mobileye Vision Technologies
13 Hartom St., Jerusalem 91450
Tel: +972(0)2-541-7333
Fax: +972(0)2-541-7300
Site: www.Mobileye.com

Project:	PRI C Sample	Board:	PCB001281
Project version:	1.0	Design:	ENCODER_POWER
Sheet: 18	of: 22	Classification:	Confidetial
Size: A0	Document Number:	<Doc>	

	Name	Date	Signature
Designed:	Ilan Braun	Sunday, November 09, 2025	
Checked:	Alon Rotman	<C. Date>	
Approved:	<Approved>	<A. Date>	

FG19 - TDA4

DDR_0

EMIF0 / LPDDR4

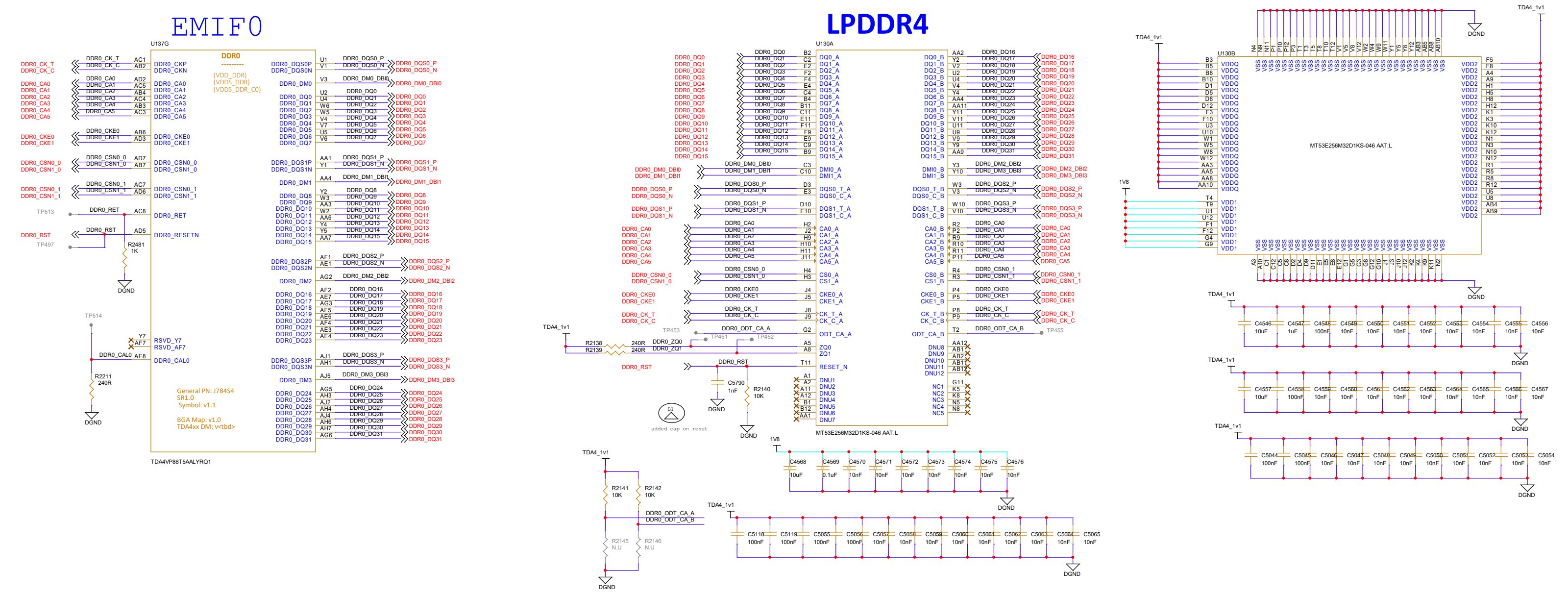

MCU FLASH

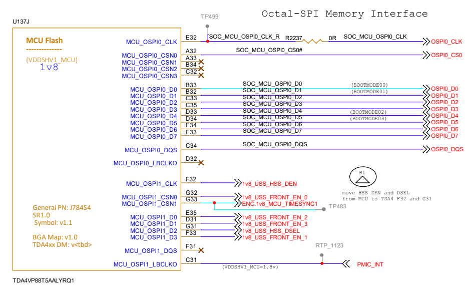

NOR FLASH

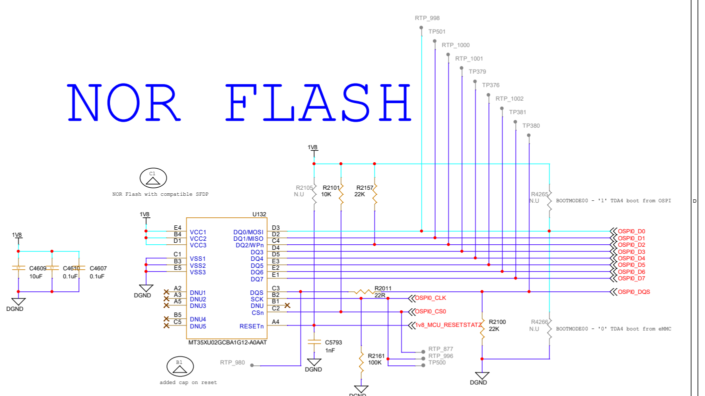

DDR_1

EMIF1 / LPDDR4

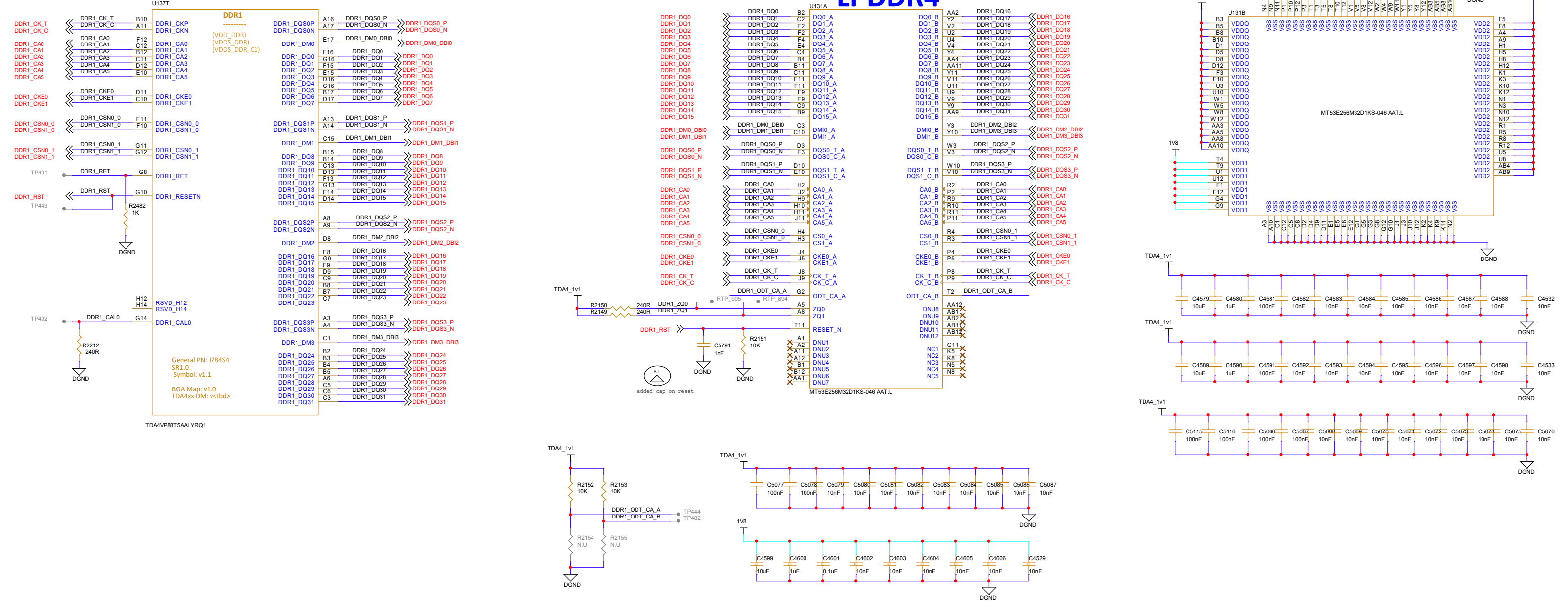

MMC0 & MMC1

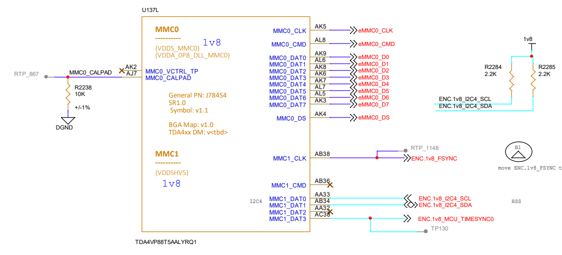

eMMC

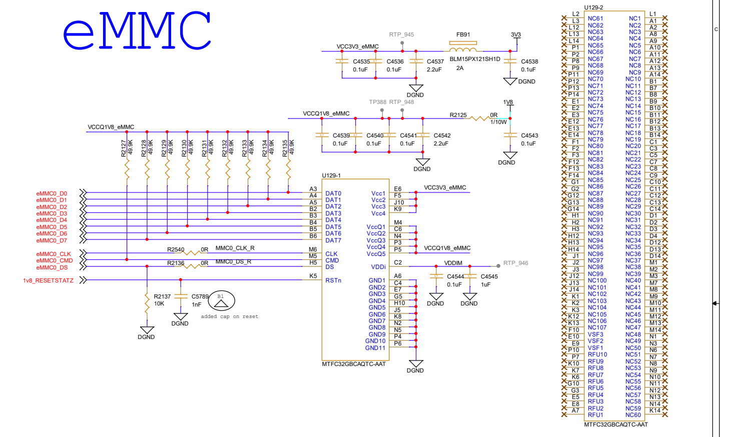

DDR_2

EMIF2 / LPDDR4

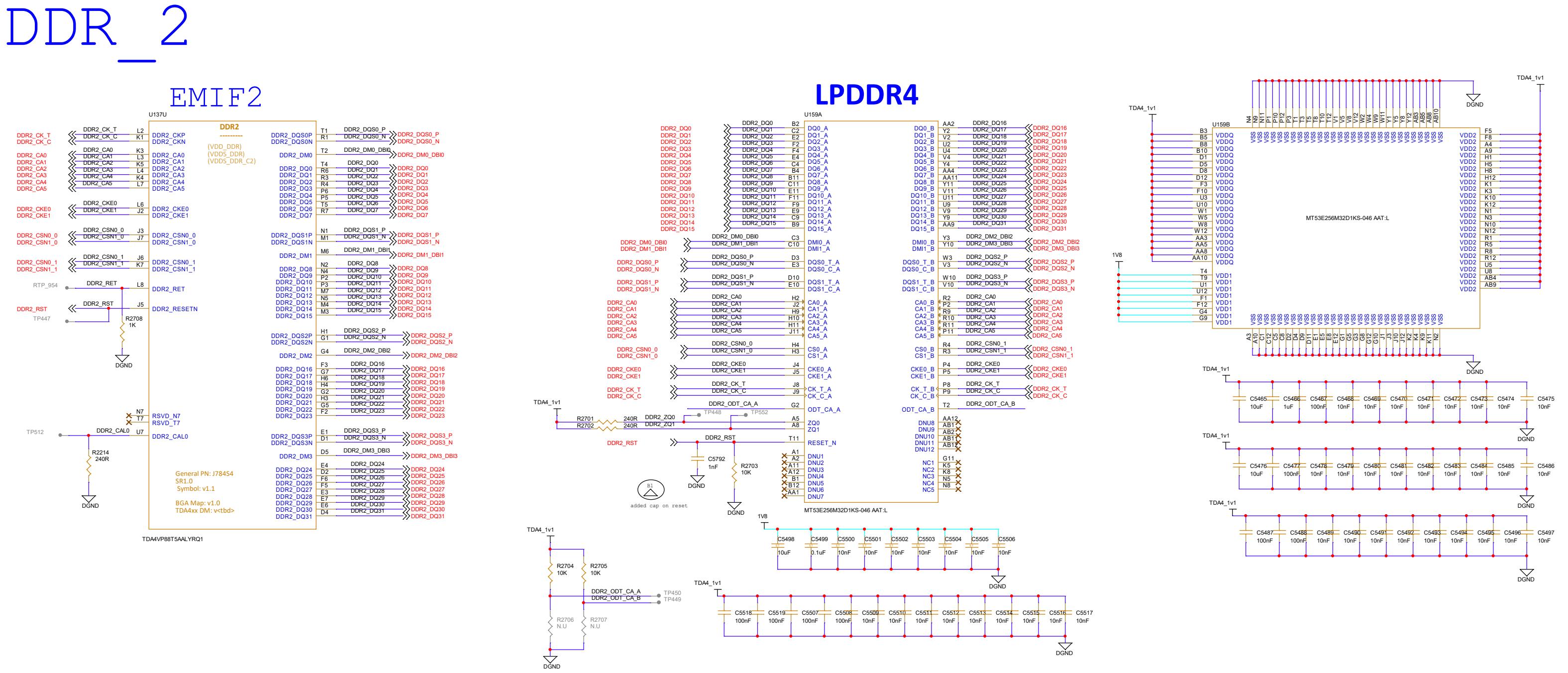

EMIF3

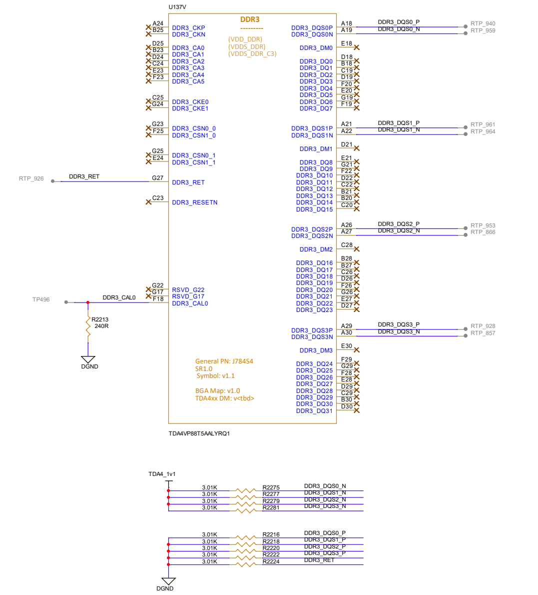

DR64 no debug

PCB001289_PRIMARY_C1_V14 /

Mobileye Vision Technologies
13 Hartom St., Jerusalem 91450
Tel: +972(0)2-541-7333
Fax: +972(0)2-541-7300
Site: www.Mobileye.com

Project:	PRI C Sample			Board:	PCB001281
Project version:	1.0	Design:	ENCODER_MEM		
Sheet:	19	of:	22	Classification:	Confidetial
Size:	A0	Document Number:	<Doc>		

	Name	Date	Signature
Designed:	Ilan Braun	Sunday, November 09, 2025	
Checked:	Alon Rotman	<C. Date>	
Approved:	<Approved>	<A. Date>	

GENERAL

MCU & MAIN GENERAL IO, OSC CLKS

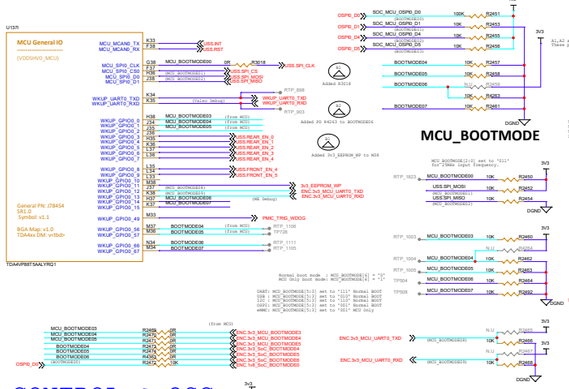

EEPROM

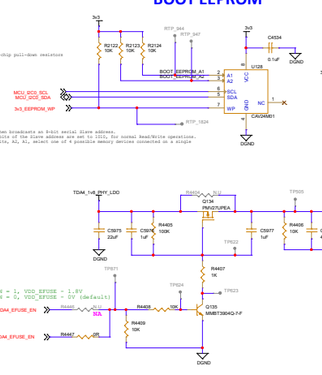

SPECIAL, DEBUG & RSVD

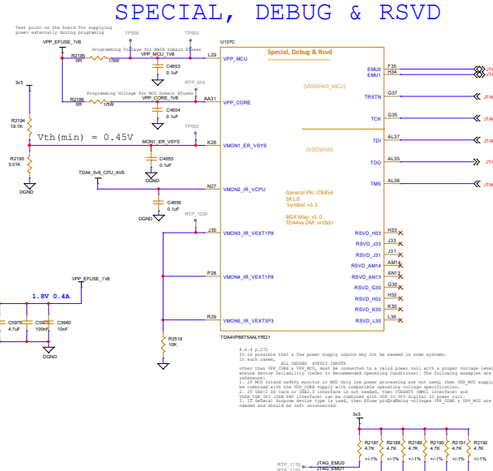

GENERAL IO

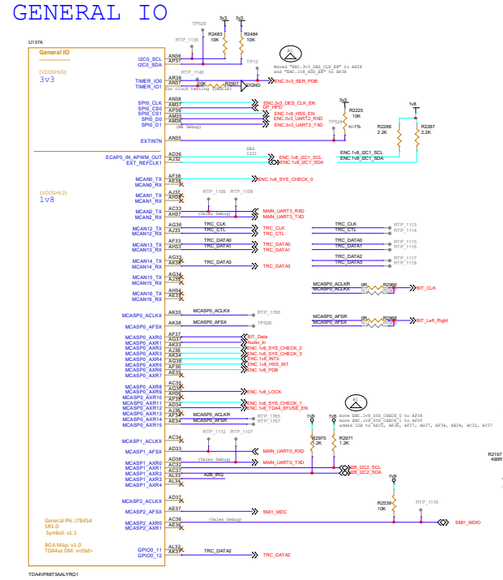

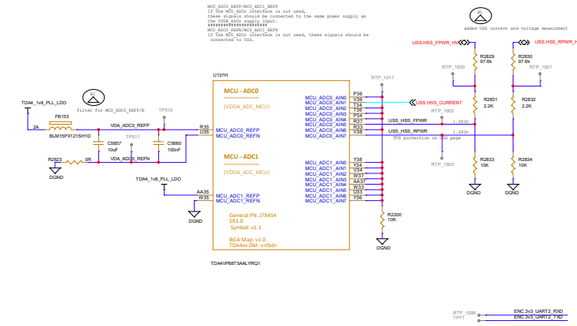

USB 2.0

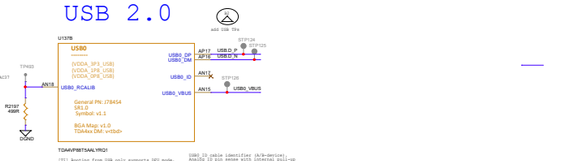

CONTROL & OSC

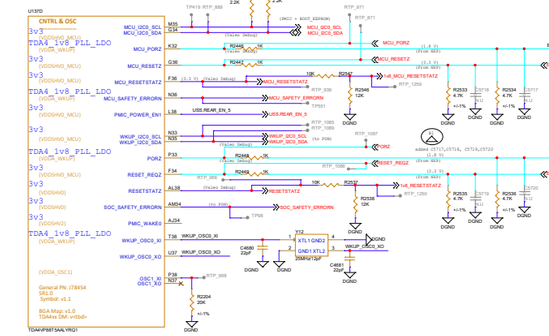

UFS FLASH

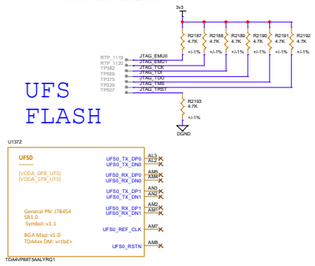

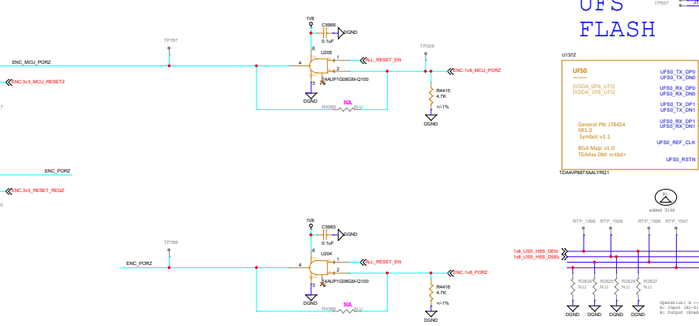

VALEO DEBUG CONNECTOR

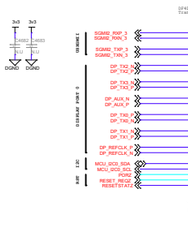

INTERFACES

CSI

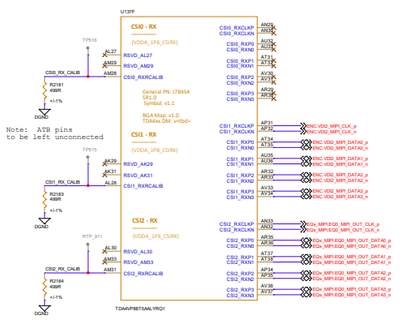

DSI

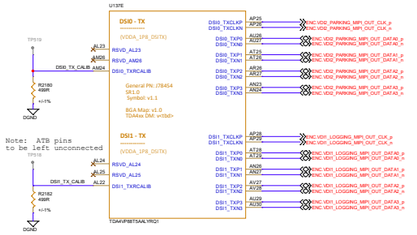

MCU RGMII

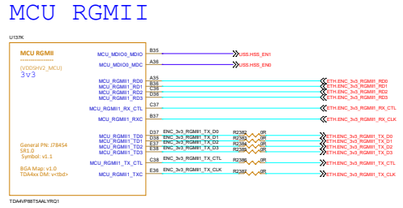

A2B_AD2428

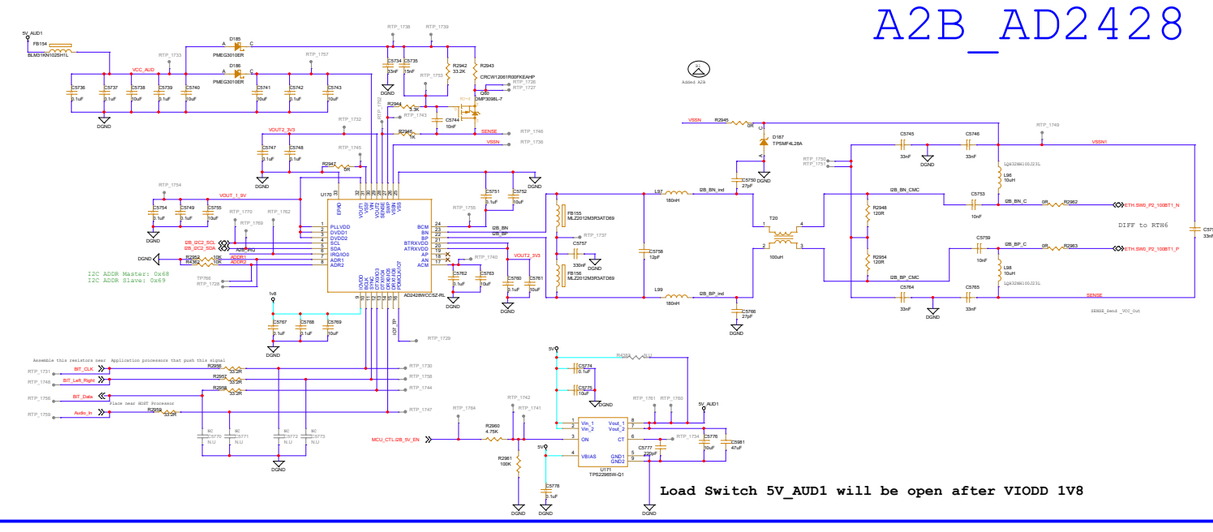

SerDes

SERDES0

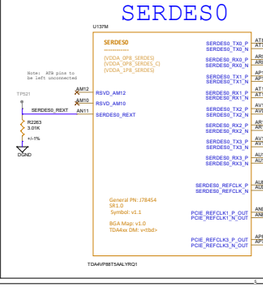

SERDES1

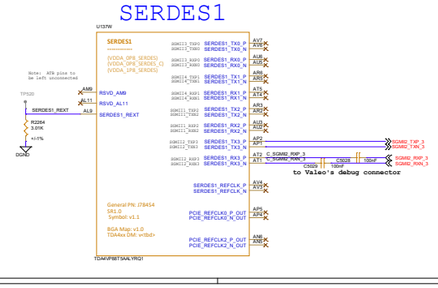

SERDES2

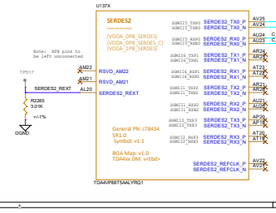

SERDES4

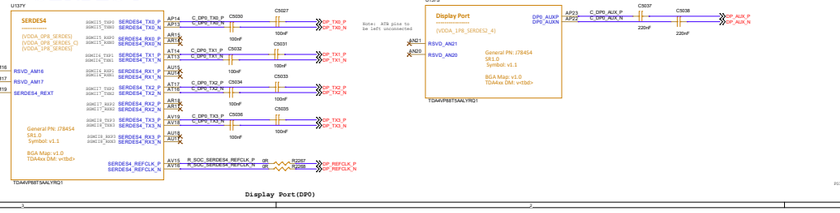

Mobileye Vision Technologies
13 Hartom St., Jerusalem 91450
Tel: +972@3-541-7333
Fax: +972@3-541-7300
Site: www.Mobileye.com

Project:	PRI C Sample	Board:	PC0001281
Project version:	1.0	Design:	ENCODER
Sheet: 20	OF: 22	Classification:	Confidential
Size: A0	Document Number:	<Doc>	
	Name	Date	Signature
Designed:	Ilan Biran	Sunday, November 09, 2025	
Checked:	Alon Rotman	<C. Date>	
Approved:	<Approved>	<A. Date>	

PC0001289_PRIMARY_C1_V14

VDI1_DES_VA7044

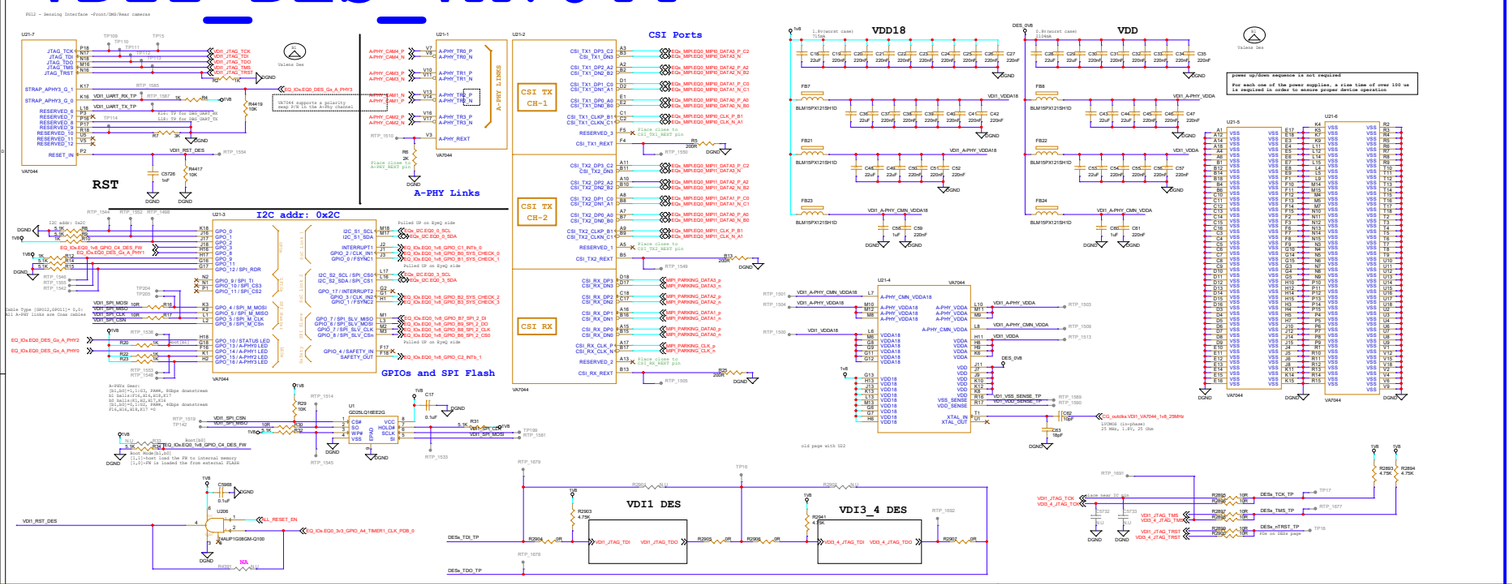

PoC_FILTER

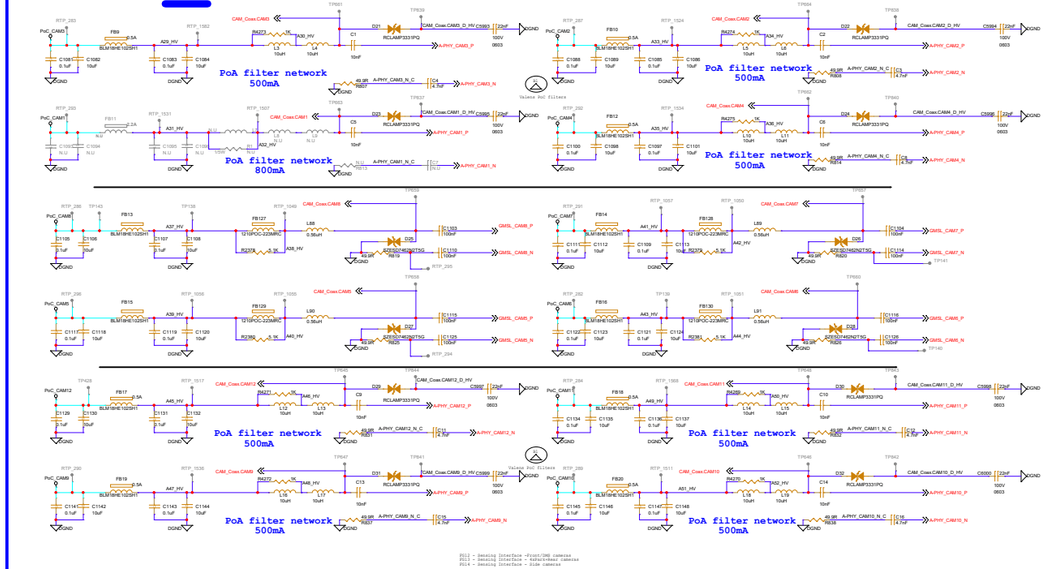

VDI2_TDA4_DES_96724

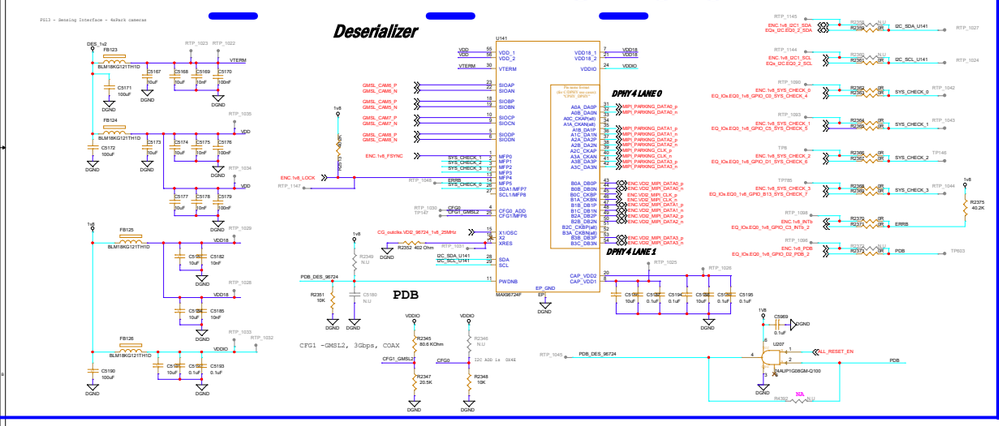

VDI2_TDA4_DES_96793

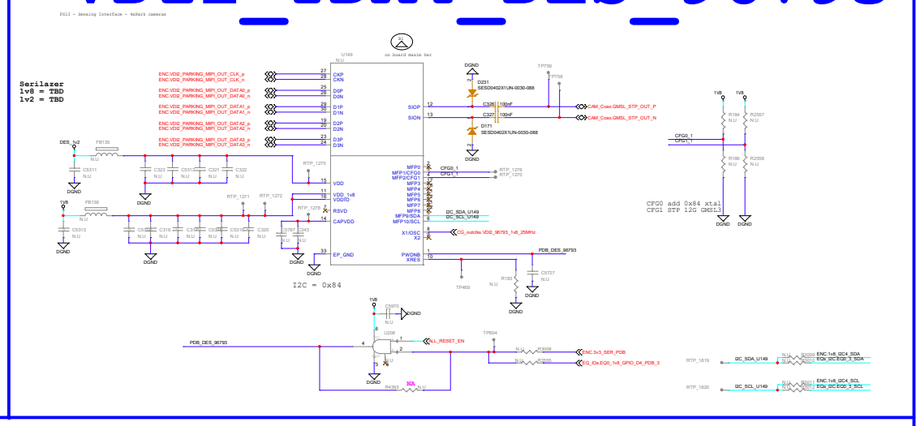

PoC_HSS

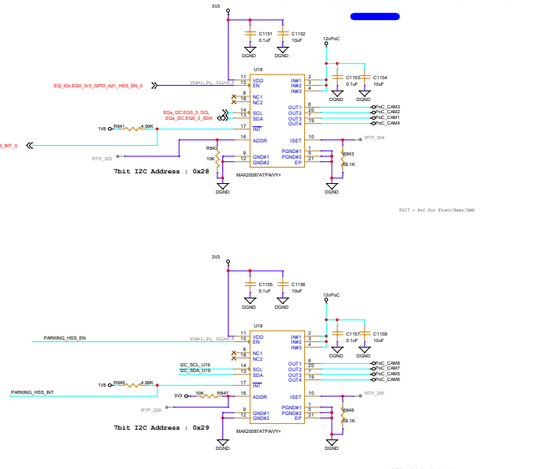

VDI3_DES_VA7044

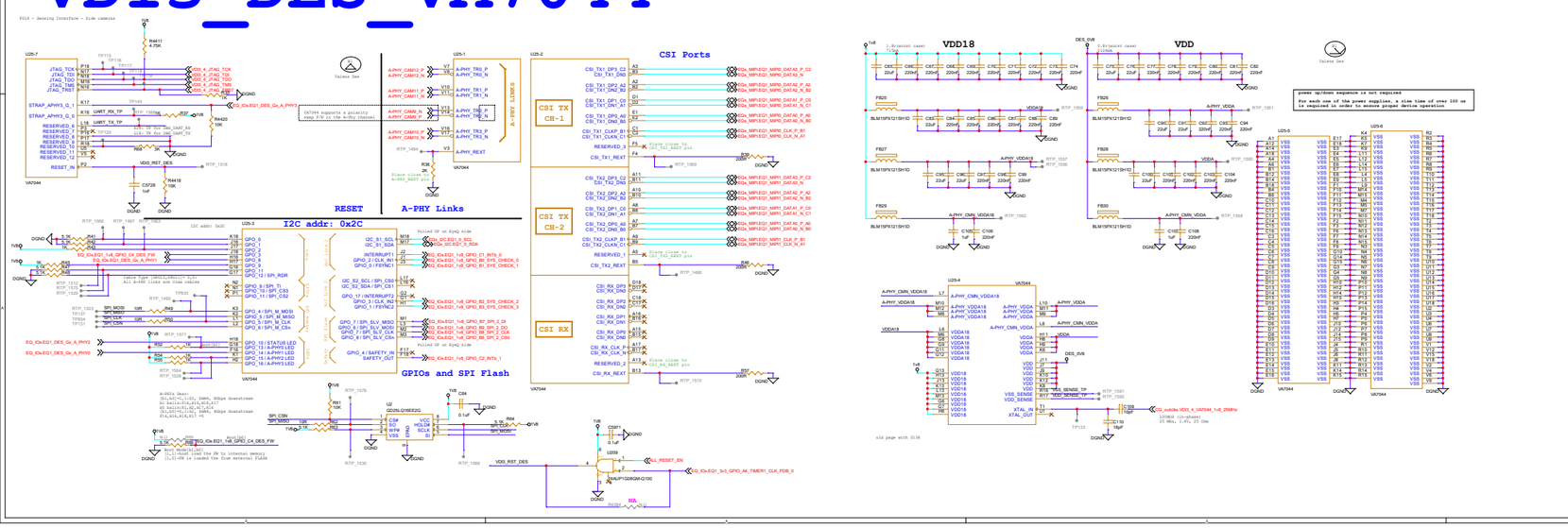

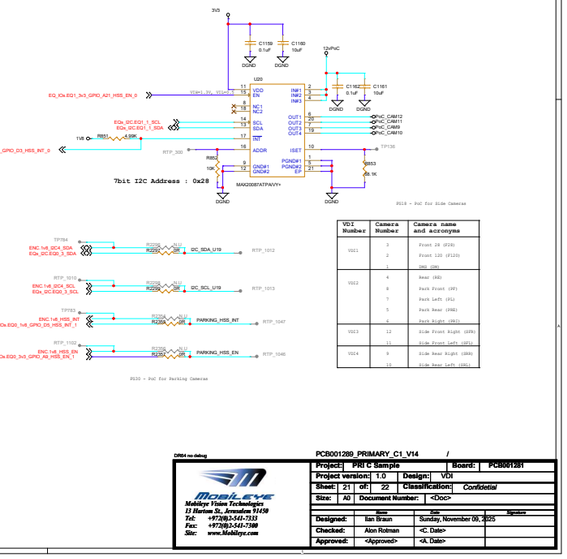

VDI Number	Camera Number	Camera name and accronym
VDI1	3	Front 2K (F2K)
	2	Front 120 (F120)
	1	DMS (DMS)
VDI2	4	Rear (R2)
	6	Park Front (PF)
	7	Park Left (PL)
	5	Park Rear (PRE)
	8	Park Right (PR)
VDI3	12	Side Front Right (SFR)
	9	Side Rear Left (SRL)
VDI4	9	Side Rear Right (SRR)
	10	Side Rear Left (SRL)

DPHY on debug

PCB001280_PRIMARY_C1_V14 /

Project:	PRI C Sample	Board:	PCB001281
Project version:	1.0	Design:	VDI
Sheet: 21 of: 22		Classification:	Confidential
Size: A0	Document Number:	<Doc>	
	Rev	Date	Signature
Designed:	Ian Braun	Sunday, November 09, 2025	
Checked:	Alon Rotman	<C. Date>	
Approved:	<Approved>	<A. Date>	

MobilEye
Mobileye Vision Technologies
13 Hartom St., Jerusalem 91450
Tel: +972(0)2-541-7333
Fax: +972(0)2-541-7500
Site: www.Mobileye.com

DISCHARGE CIRCUIT

R025 - Discharge circuit

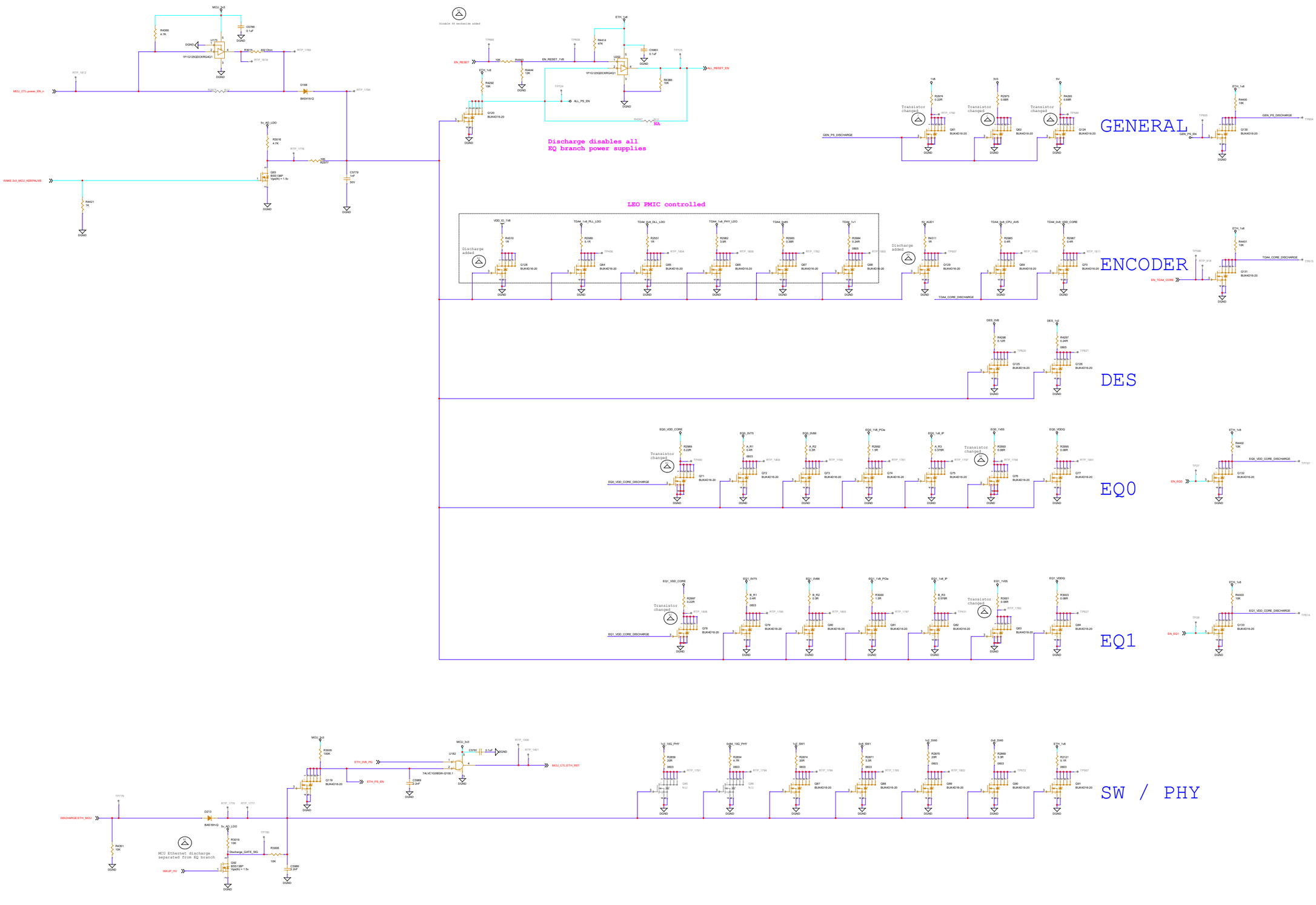

DR04 no debug	PCB001289_PRIMARY_C1_V14	/	
Project:	PRI C Sample	Board:	PCB001281
Project version:	1.0	Design:	DISCHARGE
Sheet: 22	of: 22	Classification:	Confidential
Size: A0	Document Number:	<Doc>	
	Name	Date	Signature
Designed:	Ian Braun	Sunday, November 09, 2025	
Checked:	Alon Rolman	<C. Date>	
Approved:	<Approved>	<A. Date>	

Mobileye Vision Technologies
13 Hartom St., Jerusalem 91450
Tel: +972(0)-541-7313
Fax: +972(0)-541-7500
Site: www.Mobileye.com