DUBAI RAPID LINK CONSORTIUM

Dubai Metro, UAE
Jebel Ali Depot

Structural Design Calculation
Building 15 – Control And Security Office

May 2008

ATKINS
WS Atkins & Partners Overseas
Supported by Meinhardt Infrastructure

Client: JT Metro JV	**Contract No. (if any):**
Project Title: Dubai Metro, UAE	**Project No.:** JRD4561
Document No.: DM001-E-AAS-CDP-DR-DCC-373905	**Controlled Copy No.:**
Document Title: Auxiliary Depot- Jebel Ali Structural Design Calculation Building 15 – Control And Security Office	
Covering Letter / Transmittal Ref. No.: To be advised	**Date of Issue:** 28 May 2008

Revision, Review and Approval/Authorization Records

A3	Issued for REVIEW (Enhanced Design)	CK Lam May 08	Drake Lawale May 08	B. Maney May 08
A2	Issued for REVIEW	CK Lam Oct 06	P.Shepherd-Smith Oct 06	B. Maney Oct 06
A1	Internal Review	CK Lam Sep 06	P.Shepherd-Smith Sep 06	B. Maney Sep 06
Revision	Description	Prepared by / date	Reviewed by / date	App. or Auth. by / date

Distribution (if insufficient space, please use separate paper)

Controlled Copy No.	Issued to
1	JT Metro JV
2	Atkins (Office Copy)
3	Atkins (P. Shepherd-Smith)
4	Meinhardt Infrastructure (CK Lam)

Note: App. and Auth. mean "Approved" and "Authorized" respectively.

Table of Contents

CONTROL SECURITY OFFICE

1. INTRODUCTION 001
2. RC SLAB & BEAMS DESIGN 003
3. RC & STEEL COLUMNS DESIGN 018
4. RC RETAINING WALL ANALYSIS & DESIGN 023

1. INTRODUCTION

INTRODUCTION

This is a single storey building located at the Depot boundary alongside the main entrance.

The Control and Security Office is approximately 5m wide x 9m long x 3.7m high. It contains a fire control panel for use by the fire department, Dubai Civil Defence (DCD) and also control the coded security gate to be provided at the depot entrance.

The structural system for this building is conventional cast-in-situ reinforced concrete (RC) beams and slab system supported by RC columns and walls. Lateral stability of the structure is provided by the beam-slab and column-wall frame action.

The foundation system for this single storey building is raft.

2. RC SLAB & BEAMS DESIGN

Site JA B15	Date 5/28/2008	Job No.
Roof Slab	Designed by PTH	Sheet No.

REINFORCED CONCRETE DESIGN TO BS 8110 : Part 1 - TWO WAY SLAB

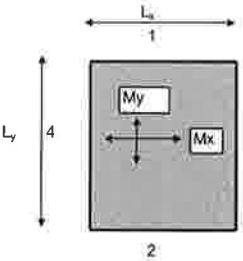

Type of Slab Panel :

7 - One long edge continuous

1. Material Properties

Concrete grade	f_{cu}	=	40	N/mm²
Steel grade	f_y	=	460	N/mm²
Concrete density	γ_c	=	24	kN/m³
Steel density	γ_s	=	78	kN/m³

2. Design Data

Thickness of slab	h	=	200	mm
Width of slab	b	=	1000	mm
Short span	L_x	=	4800	mm
Long span	L_y	=	5300	mm
Concrete Ten. cover	c_1	=	40	mm
Bar dia. in short direc.	D_x	=	12	mm
Bar dia. in long direc.	D_y	=	12	mm
Effect.depth in short	d_x	=	154.0	mm
Effect.depth in long	d_y	=	142.0	mm
Concrete comp. cover	c_2	=	40	mm

Span ratio	L_y/Lx	=	1.104	Two way slab design
No. of discont. edges		=	3.000	
Beta-y	β_y	=	0.044	
Gamma	γ	=	0.31	
End Conditions :			4/3 for continuous	
(β_1, β_2, β_3, β_4)			0 for discontinuous	
Beta-1 (short)	β_1	=	0.000	
Beta-2 (short)	β_2	=	0.000	
Beta-3 (long)	β_3	=	1.333	
Beta-4 (long)	β_4	=	0.000	
Beta-x	β_x	=	0.049	

3. Loadings

Self-weight of slab	=	4.80	kN/m²
Finishes & RC Plinth	=	4.80	kN/m²
Sand deposit	=	1.00	kN/m²
M & E services	=	0.30	kN/m²
Total Dead Load	=	10.90	kN/m²
Total Live Load	=	5.00	kN/m²
Design load	=	23.26	kN/m²

Factors		
	DL	1.4
	LL	1.6

4. Analysis & Reinforcement Design

a Short Span

Neg. m'nt at suppt.	M_3	=	34.73	kNm
Pos. m'nt at mid-span	M_x	=	26.05	kNm
Neg. m'nt at suppt.	M_4	=	0.00	kNm

Steel req'd

Neg. m'nt at suppt.	A_{3req}	=	593	mm²	A_{3prov} (top) =	754	mm²	T12 - 150 c/c	O.K
Pos. m'nt at mid-span	A_{xreq}	=	445	mm²	A_{xprov} (bot) =	754	mm²	T12 - 150 c/c	O.K
Neg. m'nt at suppt.	A_{4req}	=	260	mm²	A_{4prov} (top) =	754	mm²	T12 - 150 c/c	O.K
					% of steel	**0.38**	%	**within limit ! O.K**	

b Long Span

Neg. m'nt at suppt.	M_1	=	0.00	kNm
Pos. m'nt at mid-span	M_y	=	23.31	kNm
Neg. m'nt at suppt.	M_2	=	0.00	kNm

Steel req'd

Neg. m'nt at suppt.	A_{1req}	=	260	mm²	A_{1prov} (top) =	754	mm²	T12 - 150 c/c	O.K
Pos. m'nt at mid-span	A_{yreq}	=	432	mm²	A_{yprov} (bot) =	754	mm²	T12 - 150 c/c	O.K
Neg. m'nt at suppt.	A_{2req}	=	260	mm²	A_{2prov} (top) =	754	mm²	T12 - 150 c/c	O.K
					% of steel	**0.38**	%	**within limit ! O.K**	

5. Deflection Check

Basic span/depth	$(L_x/d)_b$	=	26.00	(Cantilever=7, S.Sup=20, C.Sup=26)
Tension mod. factor	m.f	=	1.832	
Comp. steel req'd ?		=	y	(Y=Yes, N=No)
Comp. mod. factor		=	1.140	
Allowable span/depth	$(L_x/d)_{al}$	=	54.31	
Actual span/depth	$(L_x/d)_{ac}$	=	31.17	**O.K**

Compression Bar Dia = 12 mm

$A_{t\,prov}$ (top) = 754 mm² | T12 - 150 c/c

6. Shear Check (short span)

Shear at short span Vsx = 52.47 kN

SS CP 65 : Part 1 : 1999 - Table 3.16

Short span coefficient, βvx = 0.47

Long span coefficient, βvy = 0.26

Distance from Support (mm)	av (mm)	V (kN)	v (N/mm²)	vc (N/mm²)	Enhanced vc (N/mm²)	Asv/sv (mm²/m)	Remarks
d	154.0	49.11	0.32	0.74	1.48	**0.00**	**No Shear Links**
2d	308	45.74	0.30	0.74	0.74	**0.00**	**No Shear Links**
3d	462	42.37	0.28	0.74	0.74	**0.00**	**No Shear Links**

7. Shear Check (long span)

Shear at long span Vsy = 29.03 kN

Distance from Support (mm)	av (mm)	V (kN)	v (N/mm²)	vc (N/mm²)	Enhanced vc (N/mm²)	Asv/sv (mm²/m)	Remarks
d	142.0	27.47	0.19	0.78	1.55	**0.00**	**No Shear Links**
2d	284	25.92	0.18	0.78	0.78	**0.00**	**No Shear Links**
3d	426	24.36	0.17	0.78	0.78	**0.00**	**No Shear Links**

Site: JA BUILDING 15

Date: 26/05/2008

Job No.

Designed by: PTH

Sheet No.

BEAM LOAD TAKING - ROOF LEVEL

RB 1 (400 x 500)

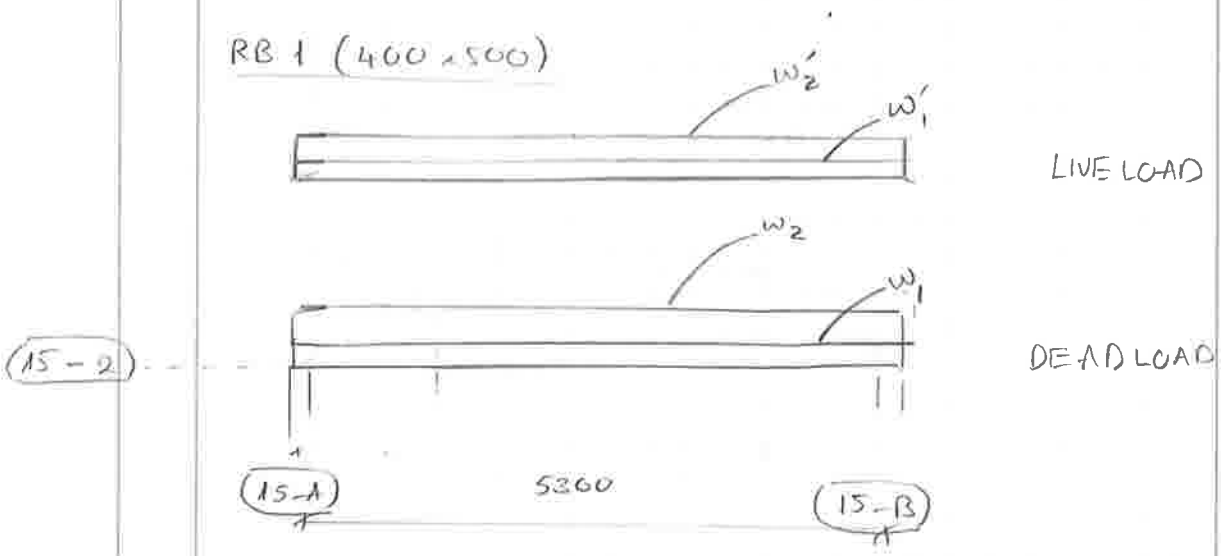

LL: SLAB LOADING: LL = 5 kPa

$w_1' = 5 \times \frac{4.2}{2} = 10.5$ kN/m

$w_2' = 5 \times \frac{4.8}{2} = 12.0$ kN/m

DL. SLAB LOADING: DL = 10.9 kPa

$w_1 = 10.9 \times \frac{4.2}{2} = 23.0$ kN/m

$w_2 = 10.9 \times \frac{4.8}{2} = 26.2$ kN/m

PROKON Software Consultants (Pty) Ltd Internet: http://www.prokon.com E-Mail : mail@prokon.com	Job Number		Sheet
	Job Title		
	Client		
	Calcs by	Checked by	Date

Continuous Beam: JA B15 - RB1 (400 x 500) (Code of Practice : BS8110 - 1997)

5/28/2008 1:40:04 PM

C01

Input Tables

Fcu (MPa)	40
Fy (MPa)	460
Fyv (MPa)	460
% Redistribution	0
Downward/Optimized redistr.	D
Cover to centre top steel(mm)	40
Cover to centre bot.steel(mm)	40
Dead Load Factor	1.4
Live Load Factor	1.6
Density of concrete (kN/m3)	24
% Live load permanent	0
Ø (Creep coefficient)	2
Ecs (Free shrinkage strain)	300E-6

Sec No.	Bw (mm)	D (mm)	Bf-top (mm)	Hf-top (mm)	Bf-bot (mm)	Hf-bot (mm)	Y-offset (mm)	Web offset	Flange offset
1	400	500							

Span No	Section Length(m)	Sec No Left	Sec No Right
1	5.3	1	

Sup No.	Code C,F	Column Below			Code F,P	Column above			Code F,P
		D(mm)	B(mm)	H(m)		D(mm)	B(mm)	H(m)	

Case D,L	Span	Wleft (kN/m)	Wright (kN/m)	a (m)	b (m)	P (kN)	a (m)	M (kNm)	a (m)
L	1	10.5							
		12							
D	1	23							
		26.2							

Span	M left (kNm)	M right (kNm)

PROKON Software Consultants (Pty) Ltd Internet: http://www.prokon.com E-Mail : mail@prokon.com	Job Number		Sheet
	Job Title		
	Client		
	Calcs by	Checked by	Date

Sections

SECTION 1

Beam Elevation

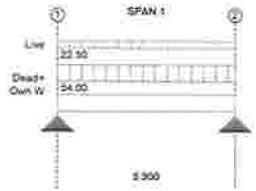

PROKON
Software Consultants (Pty) Ltd
Internet: http://www.prokon.com
E-Mail : mail@prokon.com

Job Number		Sheet
Job Title		
Client		
Calcs by	Checked by	Date

Deflection, Shear, Moment and Steel diagrams. Span 1

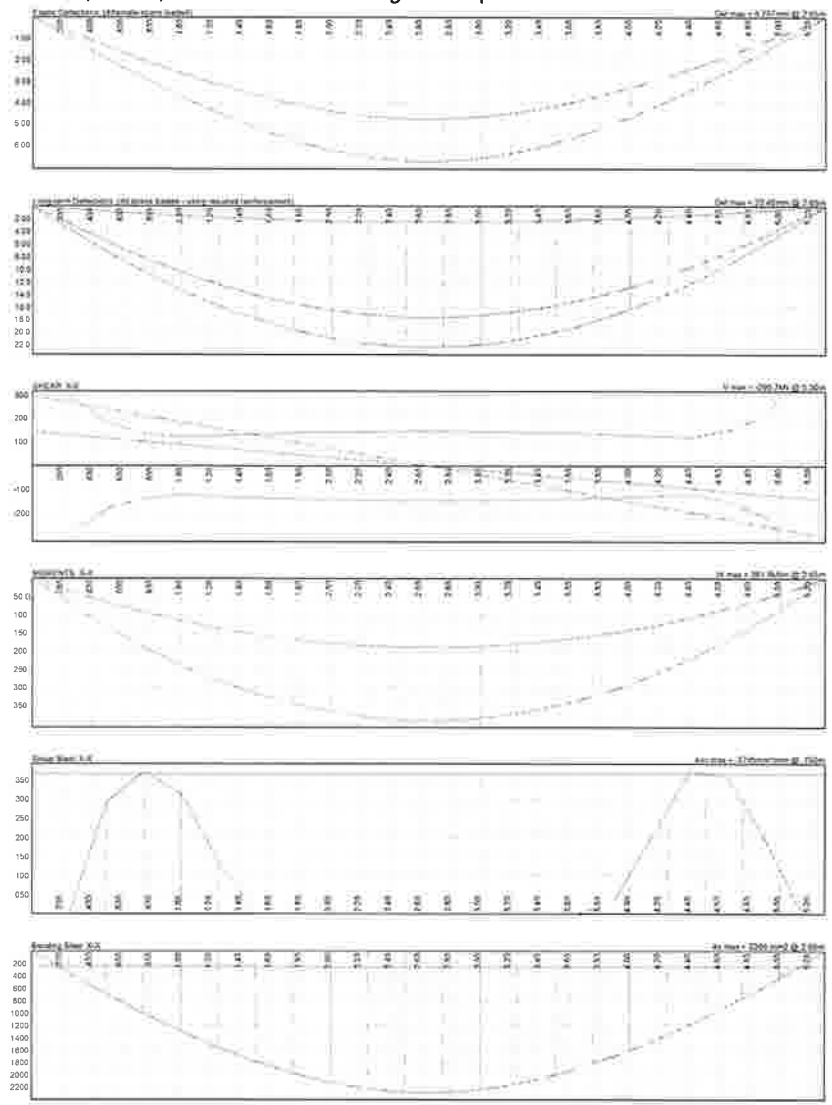

PROKON
Software Consultants (Pty) Ltd
Internet: http://www.prokon.com
E-Mail : mail@prokon.com

Job Number		Sheet
Job Title		
Client		
Calcs by	Checked by	Date

C O N T I N U O U S B E A M Ver W2.3.21 - 16 Jan 2007

Title : JA B15 - RB1 (400 x 500)
Data File : C:\Documents and Settings\civilengtemp\Desktop\IA Report\Week 15\JA B15\JA B
Date/Time : 5/28/2008
Code of Practice : BS8110 - 1997

BENDING MOMENTS & REINFORCEMENT

SPAN 1

Position(m)	Min.Moment(kNm)	Max.Moment(kNm)	As-top(mm2)	As-bot(mm2)
0.000	0.00	0.00	0.00	0.00
0.250	34.09	70.45	0.00	367.97
0.500	64.80	133.92	0.00	699.51
0.750	92.14	190.42	0.00	1013.30
1.000	116.10	239.94	0.00	1303.91
1.250	136.69	282.49	0.00	1564.94
1.500	153.90	318.06	0.00	1792.32
1.750	167.74	346.66	0.00	1981.90
2.000	178.20	368.28	0.00	2129.69
2.250	185.29	382.93	0.00	2232.15
2.500	189.00	390.60	0.00	2286.62
2.650	189.61	391.86	0.00	2295.59
2.900	187.92	388.37	0.00	2270.72
3.150	182.86	377.91	0.00	2196.80
3.400	174.42	360.47	0.00	2075.83
3.650	162.61	336.06	0.00	1910.87
3.900	147.42	304.67	0.00	1705.67
4.150	128.86	266.31	0.00	1464.33
4.400	106.92	220.97	0.00	1191.00
4.650	81.61	168.66	0.00	889.64
4.900	52.92	109.37	0.00	571.27
5.150	20.86	43.11	0.00	225.16
5.300	-0.00	0.00	0.00	0.00

Provide 4T32
As = 3220 mm²

SHEAR FORCES & REINFORCEMENT

SPAN 1

Position(m)	Minimum Shear(kN)	Maximum Shear(kN)	Shear Capacity(kN)	Asv/Sv (mm2/mm)	Asv/Sv(nom) (mm2/mm)
0.000	143.10	295.74	920.00	0.00	0.37
0.250	129.60	267.84	292.70	0.00	0.37
0.500	116.10	239.94	181.30	0.29	0.37
0.750	102.60	212.04	136.75	0.37	0.37
1.000	89.10	184.14	121.26	0.31	0.37
1.250	75.60	156.24	128.86	0.14	0.37
1.500	62.10	128.34	134.83	0.00	0.37
1.750	48.60	100.44	139.42	0.00	0.37
2.000	35.10	72.54	142.80	0.00	0.37
2.250	21.60	44.64	145.06	0.00	0.37
2.500	8.10	16.74	146.23	0.00	0.37
2.650	-0.00	-0.00	146.42	0.00	0.37
2.900	-27.90	-13.50	145.89	0.00	0.37

Provide
T10-250
Asv/Sv = 0.785 mm²/mm

3.150	-55.80	-27.00	144.29	0.00	0.37
3.400	-83.70	-40.50	141.59	0.00	0.37
3.650	-111.60	-54.00	137.74	0.00	0.37
3.900	-139.50	-67.50	132.62	0.03	0.37
4.150	-167.40	-81.00	126.04	0.21	0.37
4.400	-195.30	-94.50	120.27	0.37	0.37
4.650	-223.20	-108.00	151.09	0.36	0.37
4.900	-251.10	-121.50	211.83	0.20	0.37
5.150	-279.00	-135.00	443.24	0.00	0.37
5.300	-295.74	-143.10	920.00	0.00	0.37

COLUMN REACTIONS

Support	Dead Load(kN)	Live Load(kN)	Dead + Live(kN)	Ultimate(kN)
1	143.10	59.63	202.73	295.74
2	143.10	59.63	202.73	295.74

COLUMN MOMENTS (Ultimate limit state)

Columns below

Support No.	Bending Moment(kNm) Min.	Max.	Shear Force (kN) Min.	Max.
1	0.00	0.00	0.00	0.00
2	0.00	0.00	0.00	0.00

Columns above

Support No.	Bending Moment(kNm) Min.	Max.	Shear Force (kN) Min.	Max.
1	0.00	0.00	0.00	0.00
2	0.00	0.00	0.00	0.00

ELASTIC DEFLECTIONS (Alternate spans loaded - positive downward)

Modulus of elasticity: Ec = 20 + fcu/5 = 28.0 Gpa

SPAN 1

Position(m)	Min.Deflection(mm)	Max.Deflection(mm)
0.000	-0.00	-0.00
0.250	0.71	1.00
0.500	1.39	1.97
0.750	2.03	2.88
1.000	2.63	3.73
1.250	3.18	4.50
1.500	3.66	5.18
1.750	4.06	5.75
2.000	4.38	6.21
2.250	4.61	6.53
2.500	4.73	6.71
2.650	4.76	6.74

2.650	4.76	6.74
2.900	4.70	6.66
3.150	4.53	6.42
3.400	4.27	6.04
3.650	3.91	5.54
3.900	3.47	4.92
4.150	2.97	4.20
4.400	2.40	3.40
4.650	1.78	2.52
4.900	1.12	1.59
5.150	0.43	0.61
5.300	0.00	0.00

LONGTERM DEFLECTIONS (All spans loaded - positive downward)

Symbols: DS : Shrinkage deflection.
DL : Long-term deflection under permanent load.
DI : Instantaneous deflection under short-term load.
DT : Total long-term deflection.

SPAN 1

Position(m)	DS(mm)	DL(mm)	DI(mm)	DT(mm)
0.000	-0.00	0.00	0.00	-0.00
0.250	0.42	2.48	0.81	3.70
0.500	0.81	4.83	1.57	7.22
0.750	1.17	7.01	2.26	10.44
1.000	1.50	8.96	2.86	13.32
1.250	1.77	10.66	3.39	15.82
1.500	2.01	12.11	3.83	17.94
1.750	2.20	13.28	4.18	19.66
2.000	2.34	14.17	4.45	20.97
2.250	2.44	14.78	4.63	21.85
2.500	2.49	15.10	4.73	22.32
2.650	2.50	15.15	4.75	22.40
2.650	2.50	15.15	4.75	22.40
2.900	2.47	15.01	4.70	22.18
3.150	2.40	14.57	4.57	21.55
3.400	2.29	13.85	4.35	20.49
3.650	2.13	12.84	4.05	19.02
3.900	1.92	11.56	3.66	17.14
4.150	1.67	10.01	3.18	14.86
4.400	1.37	8.20	2.63	12.20
4.650	1.03	6.16	1.99	9.18
4.900	0.66	3.91	1.27	5.83
5.150	0.25	1.49	0.49	2.23
5.300	0.00	-0.00	0.00	0.00

QUANTITIES

Section	Area(m^2)
1	0.200

Total weight of beam = 25.44 kN

Site: JA Building 15 | Date: 26/05/2008 | Job No. | Designed by: PTH | Sheet No. 1

BEAM LOAD TAKING – ROOF LEVEL.

RB2 (300x500)

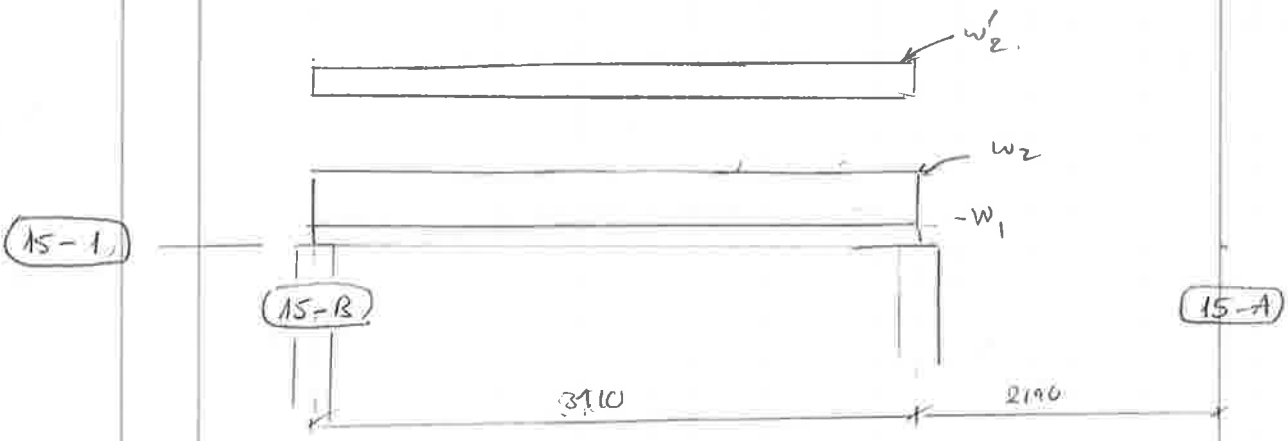

SLAB LOADING: DL = 10.9 kPa
LL = 5.0 kPa

BEAM LOADING:

LL

$w_2' = 5 \times 4.8/2 = 12$ kN/m (LL = 5kPa)

DL.

$w_1 = 1.62 \times 150/1000 \times 24 + 1.5 = 7.332$ (kN/m) (Parapet + façade)

$w_2 = 10.9 \times 4.8/2 = 26.2$ (kN/m)

PROKON Software Consultants (Pty) Ltd Internet: http://www.prokon.com E-Mail : mail@prokon.com	Job Number		Sheet
	Job Title		
	Client		
	Calcs by	Checked by	Date

Continuous Beam: JA B15 - RB2(3-00 x 500) (Code of Practice : BS8110 - 1997)

5/27/2008 2:45:45 PM

C01

Input Tables

Fcu (MPa)	40
Fy (MPa)	460
Fyv (MPa)	460
% Redistribution	0
Downward/Optimized redistr.	D
Cover to centre top steel(mm)	40
Cover to centre bot.steel(mm)	40
Dead Load Factor	1.4
Live Load Factor	1.6
Density of concrete (kN/m3)	24
% Live load permanent	0
Ø (Creep coefficient)	2
Ecs (Free shrinkage strain)	300E-6

Sec No.	Bw (mm)	D (mm)	Bf-top (mm)	Hf-top (mm)	Bf-bot (mm)	Hf-bot (mm)	Y-offset (mm)	Web offset	Flange offset
1	300	500							

Span No	Section Length(m)	Sec No Left	Sec No Right
1	3.11	1	

Sup No.	Code C,F	Column Below			Code F,P	Column above			Code F,P
		D(mm)	B(mm)	H(m)		D(mm)	B(mm)	H(m)	

Case D,L	Span	Wleft (kN/m)	Wright (kN/m)	a (m)	b (m)	P (kN)	a (m)	M (kNm)	a (m)
L	1	12							
D	1	26.2							
D	1	7.4							

Span	M left (kNm)	M right (kNm)

PROKON Software Consultants (Pty) Ltd Internet: http://www.prokon.com E-Mail : mail@prokon.com	Job Number		Sheet
	Job Title		
	Client		
	Calcs by	Checked by	Date

Sections

SECTION 1

Beam Elevation

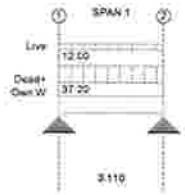

PROKON Software Consultants (Pty) Ltd Internet: http://www.prokon.com E-Mail : mail@prokon.com	Job Number		Sheet
	Job Title		
	Client		
	Calcs by	Checked by	Date

Deflection, Shear, Moment and Steel diagrams. Span 1

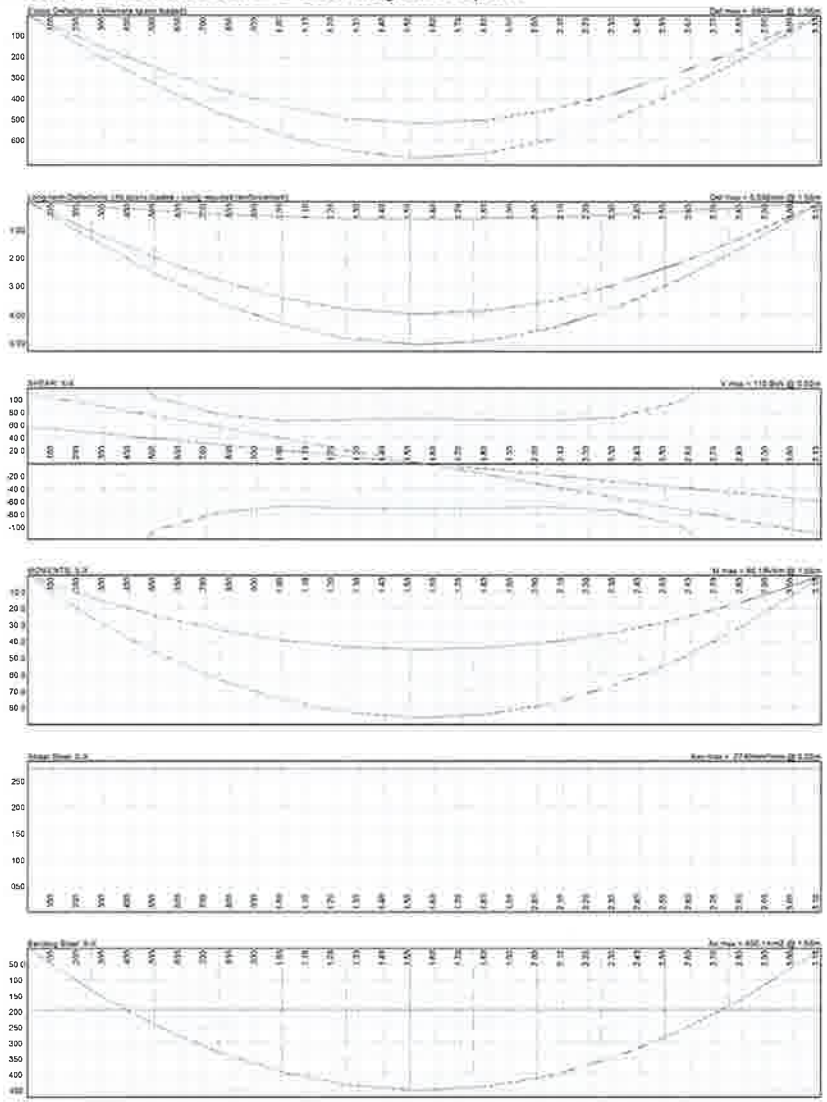

PROKON Software Consultants (Pty) Ltd Internet: http://www.prokon.com E-Mail : mail@prokon.com	Job Number		Sheet
	Job Title		
	Client		
	Calcs by	Checked by	Date


```
==========================================================================
              C O N T I N U O U S   B E A M   Ver W2.3.21 - 16 Jan 2007

Title :      JA B15 - RB1 (400 x 500)
Data File : C:\Documents and Settings\civilengtemp\Desktop\IA Report\Week 15\JA B15\JA B
Date/Time : 5/27/2008
Code of Practice : BS8110 - 1997
==========================================================================

BENDING MOMENTS & REINFORCEMENT

SPAN 1

Position(m) Min.Moment(kNm) Max.Moment(kNm) As-top(mm2) As-bot(mm2)

  0.000          0.00           0.00           0.00          0.00
  0.250         13.30          25.48           0.00        133.10
  0.500         24.27          46.51           0.00        242.94
  0.750         32.92          63.08           0.00        329.50
  1.000         39.25          75.20           0.00        392.80
  1.250         43.25          82.86           0.00        432.82
  1.500         44.92          86.07           0.00        449.58
  1.555         44.98          86.18           0.00        450.14 → 2T20
  1.805         43.81          83.95           0.00        438.51
  2.055         40.33          77.27           0.00        403.60
  2.305         34.51          66.13           0.00        345.43
  2.555         26.38          50.54           0.00        263.98
  2.805         15.91          30.49           0.00        159.27
  3.055          3.13           5.99           0.00         31.28
  3.110          0.00           0.00           0.00          0.00
```

$A_s = 628\ mm^2$

```
SHEAR FORCES & REINFORCEMENT

SPAN 1

Position(m)  Minimum    Maximum    Shear         Asv/Sv   Asv/Sv(nom)
             Shear(kN)  Shear(kN)  Capacity(kN)  (mm2/mm)   (mm2/mm)

  0.000       57.85      110.84      690.00        0.00       0.27 → Link T10@200
  0.250       48.55       93.02      199.46        0.00       0.27
  0.500       39.25       75.20      105.20        0.00       0.27
  0.750       29.95       57.38       77.63        0.00       0.27
  1.000       20.65       39.56       67.10        0.00       0.27
  1.250       11.35       21.74       69.31        0.00       0.27
  1.500        2.05        3.92       70.19        0.00       0.27
  1.555       -0.00       -0.00       70.22        0.00       0.27
  1.805      -17.82       -9.30       69.61        0.00       0.27
  2.055      -35.64      -18.60       67.71        0.00       0.27
  2.305      -53.46      -27.90       73.47        0.00       0.27
  2.555      -71.28      -37.20       97.43        0.00       0.27
  2.805      -89.10      -46.50      163.49        0.00       0.27
  3.055     -106.92      -55.80      690.00        0.00       0.27
  3.110     -110.84      -57.85      690.00        0.00       0.27
```

$A_{sv}/s_v = 0.785\ mm^2/mm$

```
COLUMN REACTIONS

Support   Dead Load(kN)  Live Load(kN)  Dead + Live(kN)  Ultimate(kN)
```

1	57.85	18.66	76.51	110.84
2	57.85	18.66	76.51	110.84

COLUMN MOMENTS (Ultimate limit state)

Columns below

Support No.	Bending Moment (kNm) Min.	Max.	Shear Force (kN) Min.	Max.
1	0.00	0.00	0.00	0.00
2	0.00	0.00	0.00	0.00

Columns above

Support No.	Bending Moment (kNm) Min.	Max.	Shear Force (kN) Min.	Max.
1	0.00	0.00	0.00	0.00
2	0.00	0.00	0.00	0.00

ELASTIC DEFLECTIONS (Alternate spans loaded - positive downward)

Modulus of elasticity: Ec = 20 + fcu/5 = 28.0 Gpa

SPAN 1

Position (m)	Min. Deflection (mm)	Max. Deflection (mm)
0.000	-0.00	-0.00
0.250	0.13	0.17
0.500	0.25	0.33
0.750	0.35	0.47
1.000	0.43	0.58
1.250	0.49	0.65
1.500	0.52	0.68
1.555	0.52	0.68
1.555	0.52	0.68
1.805	0.50	0.66
2.055	0.45	0.59
2.305	0.37	0.49
2.555	0.27	0.36
2.805	0.16	0.21
3.055	0.03	0.04
3.110	0.00	0.00

LONGTERM DEFLECTIONS (All spans loaded - positive downward)

Symbols: DS : Shrinkage deflection.
DL : Long-term deflection under permanent load.
DI : Instantaneous deflection under short-term load.
DT : Total long-term deflection.

SPAN 1

PROKON
Software Consultants (Pty) Ltd
Internet: http://www.prokon.com
E-Mail : mail@prokon.com
Job Number | Sheet
Job Title
Client
Calcs by | Checked by | Date

Position (m)	DS (mm)	DL (mm)	DI (mm)	DT (mm)
0.000	-0.00	0.00	0.00	-0.00
0.250	0.16	0.87	0.28	1.31
0.500	0.30	1.67	0.55	2.52
0.750	0.43	2.35	0.77	3.55
1.000	0.52	2.87	0.93	4.33
1.250	0.58	3.20	1.04	4.83
1.500	0.61	3.35	1.09	5.04
1.555	0.61	3.35	1.09	5.05
1.555	0.61	3.35	1.09	5.05
1.805	0.59	3.25	1.06	4.90
2.055	0.54	2.96	0.96	4.46
2.305	0.45	2.48	0.81	3.75
2.555	0.33	1.84	0.60	2.77
2.805	0.19	1.05	0.34	1.59
3.055	0.04	0.19	0.06	0.29
3.110	0.00	0.00	0.00	0.00

QUANTITIES

Section	Area (m^2)
1	0.150

Total weight of beam = 11.20 kN

Site: JA BUILDING 15 | Date: 26/05/2008 | Job No. | Designed by: PTH | Sheet No.

BEAM LOAD TAKING - ROOF LEVEL

RB3 (400 x 500)

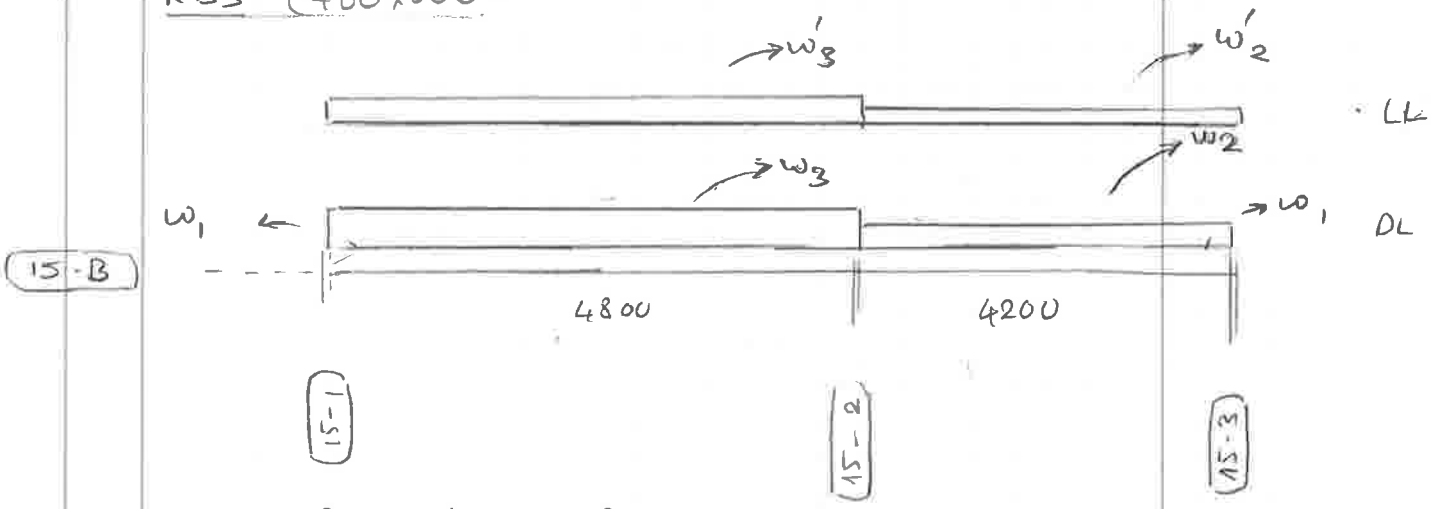

LL, SLAB LL = 5 kPa.

$w_2' = 5 \times \frac{4.2}{2} = 10.5$ kN/m

$w_3' = 5 \times \frac{4.8}{2} = 12.0$ kN/m.

DL SLAB DL = 10.9 kPa

$w_1 = 1.62 \times 0.15 \times 24 + 1.5 = 7.4$ kN/m (PARAPET + FACADE)

$w_2 = 10.9 \times \frac{4.2}{2} = 23.0$ kN/m

$w_2 = 10.9 \times \frac{4.8}{2} = 26.2$ kN/m

PROKON Software Consultants (Pty) Ltd Internet: http://www.prokon.com E-Mail : mail@prokon.com	Job Number		Sheet
	Job Title		
	Client		
	Calcs by	Checked by	Date

Continuous Beam: JA B15 - RB3 (400 x 500) (Code of Practice : BS8110 - 1997)

5/28/2008 4:02:30 PM

C01

Input Tables

Fcu (MPa)	40
Fy (MPa)	460
Fyv (MPa)	460
% Redistribution	0
Downward/Optimized redistr.	D
Cover to centre top steel(mm)	40
Cover to centre bot.steel(mm)	40
Dead Load Factor	1.4
Live Load Factor	1.6
Density of concrete (kN/m3)	24
% Live load permanent	0
Ø (Creep coefficient)	2
Ecs (Free shrinkage strain)	300E-6

Sec No.	Bw (mm)	D (mm)	Bf-top (mm)	Hf-top (mm)	Bf-bot (mm)	Hf-bot (mm)	Y-offset (mm)	Web offset	Flange offset
1	400	500							

Span No	Section Length(m)	Sec No Left	Sec No Right
1	4.8	1	
2	4.2	1	

Sup No.	Code C,F	Column Below			Code F,P	Column above			Code F,P
		D(mm)	B(mm)	H(m)		D(mm)	B(mm)	H(m)	

Case D,L	Span	Wleft (kN/m)	Wright (kN/m)	a (m)	b (m)	P (kN)	a (m)	M (kNm)	a (m)
L	1	12							
	2	10.5							
D	1	26.2							
	2	23.0							
	1	7.4							
	2	7.4							

Span	M left (kNm)	M right (kNm)

PROKON Software Consultants (Pty) Ltd Internet: http://www.prokon.com E-Mail : mail@prokon.com	Job Number		Sheet
	Job Title		
	Client		
	Calcs by	Checked by	Date

Sections

SECTION 1

Beam Elevation

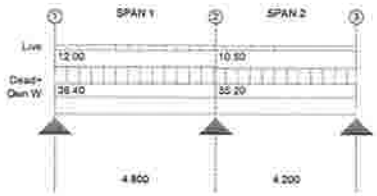

PROKON
Software Consultants (Pty) Ltd
Internet: http://www.prokon.com
E-Mail : mail@prokon.com

Job Number		Sheet
Job Title		
Client		
Calcs by	Checked by	Date

Deflection, Shear, Moment and Steel diagrams. Spans 1,2

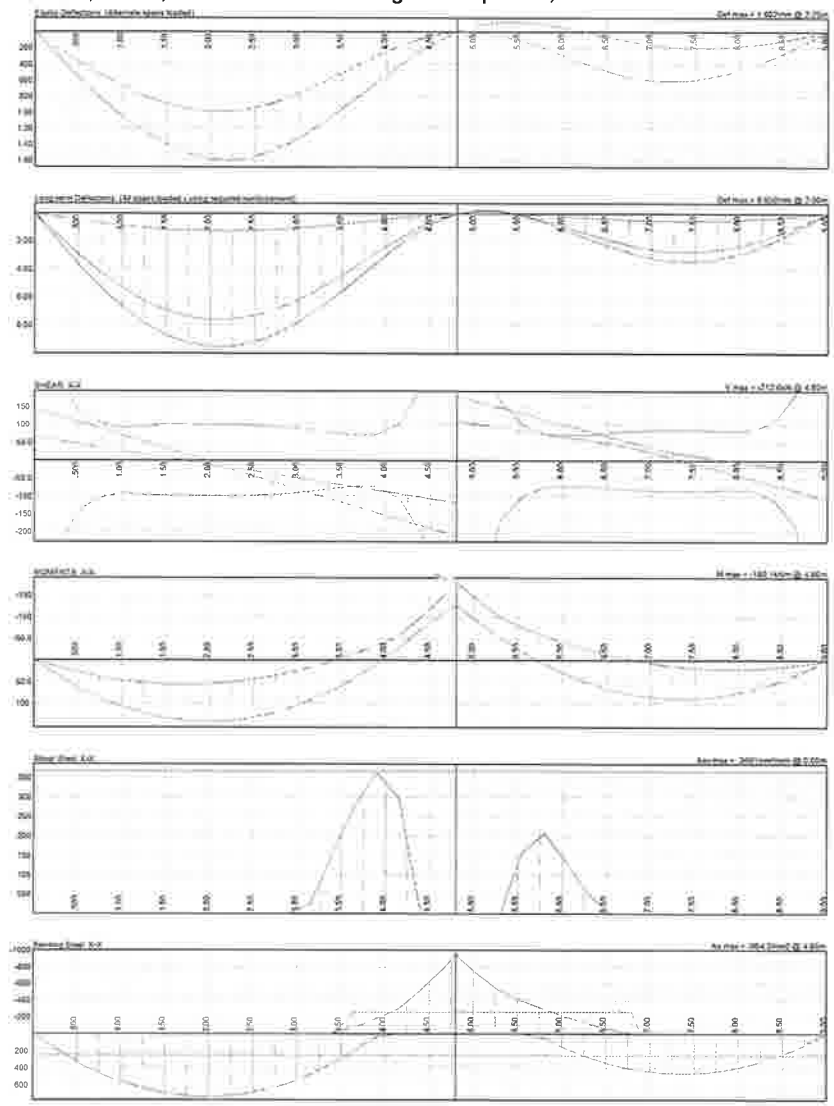

PROKON
Software Consultants (Pty) Ltd
Internet: http://www.prokon.com
E-Mail : mail@prokon.com

Job Number		Sheet
Job Title		
Client		
Calcs by	Checked by	Date

```
==========================================================================
                C O N T I N U O U S   B E A M   Ver W2.3.21 - 16 Jan 2007

Title :      JA B15 - RB3 (400 x 500)
Data File : C:\Documents and Settings\civilengtemp\Desktop\IA Report\Week 15\JA B15\JA B
Date/Time : 5/28/2008
Code of Practice : BS8110 - 1997
==========================================================================
```

BENDING MOMENTS & REINFORCEMENT

SPAN 1

Position(m)	Min.Moment(kNm)	Max.Moment(kNm)	As-top(mm2)	As-bot(mm2)
0.000	0.00	0.00	0.00	0.00
0.250	15.23	33.77	0.00	176.41
0.500	28.05	62.99	0.00	329.00
0.750	38.48	87.64	0.00	457.77
1.000	46.51	107.73	0.00	562.72
1.250	52.13	123.26	0.00	643.85
1.500	55.36	134.24	0.00	701.16
1.750	56.19	140.65	0.00	734.66
2.000	54.61	142.50	0.00	744.34
2.250	50.64	139.79	0.00	730.20
2.400	47.10	135.98	0.00	710.28
2.650	39.29	125.98	0.00	658.03
2.900	29.08	111.41	0.00	581.96
3.150	16.46	92.29	0.00	482.07
3.400	1.45	68.61	0.00	358.36
3.650	-15.96	40.36	83.39	210.84
3.900	-35.78	7.56	186.88	39.50
4.150	-57.99	-29.80	302.91	0.00
4.400	-100.85	-71.73	526.79	0.00
4.650	-148.99	-109.62	779.84	0.00
4.800	-180.06	-126.98	954.17	0.00

Provide 4T20 $A_s = 1260\,mm^2$

SPAN 2

Position(m)	Min.Moment(kNm)	Max.Moment(kNm)	As-top(mm2)	As-bot(mm2)
0.000	-180.06	-126.98	954.17	0.00
0.250	-136.72	-86.79	714.13	0.00
0.500	-98.07	-50.74	512.28	0.00
0.750	-76.27	-18.81	398.37	0.00
1.000	-56.66	8.98	295.96	46.92
1.250	-39.25	32.65	205.04	170.53
1.500	-24.05	52.18	125.61	272.57
1.750	-11.04	67.59	57.67	353.04
2.000	-0.23	78.86	1.22	411.93
2.100	3.47	82.22	0.00	429.45
2.350	11.20	87.71	0.00	458.14
2.600	16.73	89.07	0.00	465.26
2.850	20.05	86.31	0.00	450.81
3.100	21.18	79.41	0.00	414.79
3.350	20.11	68.38	0.00	357.19
3.600	16.83	53.23	0.00	278.02
3.850	11.36	33.94	0.00	177.28
4.100	3.69	10.52	0.00	54.97
4.200	0.00	0.00	0.00	0.00

SHEAR FORCES & REINFORCEMENT

SPAN 1

Position(m)	Minimum Shear(kN)	Maximum Shear(kN)	Shear Capacity(kN)	Asv/Sv (mm2/mm)	Asv/Sv(nom) (mm2/mm)
0.000	65.71	144.21	920.00	0.00	0.37
0.250	56.11	125.97	265.94	0.00	0.37
0.500	46.51	107.73	140.99	0.00	0.37
0.750	36.91	89.49	104.93	0.00	0.37
1.000	27.31	71.25	91.64	0.00	0.37
1.250	17.71	53.01	95.84	0.00	0.37
1.500	8.11	34.77	98.61	0.00	0.37
1.750	-1.49	16.53	100.15	0.00	0.37
2.000	-11.09	-1.71	100.59	0.00	0.37
2.250	-26.57	-19.95	99.95	0.00	0.37
2.400	-37.51	-26.45	99.03	0.00	0.37
2.650	-55.75	-36.05	96.54	0.00	0.37
2.900	-73.99	-45.65	92.67	0.00	0.37
3.150	-92.23	-55.25	87.03	0.03	0.37
3.400	-110.47	-64.85	78.84	0.16	0.37
3.650	-128.71	-74.45	72.27	0.28	0.37
3.900	-146.95	-84.05	73.87	0.36	0.37
4.150	-165.19	-93.65	105.51	0.30	0.37
4.400	-183.43	-103.25	206.18	0.00	0.37
4.650	-201.67	-112.85	626.62	0.00	0.37
4.800	-212.62	-118.61	920.00	0.00	0.37

← Provide T10-200

$A_{sv}/S_v = 0.785\ mm^2/mm$

SPAN 2

Position(m)	Minimum Shear(kN)	Maximum Shear(kN)	Shear Capacity(kN)	Asv/Sv (mm2/mm)	Asv/Sv(nom) (mm2/mm)
0.000	109.23	181.64	920.00	0.00	0.37
0.250	100.43	165.12	365.10	0.00	0.37
0.500	91.63	148.60	163.41	0.00	0.37
0.750	82.83	132.08	100.18	0.16	0.37
1.000	74.03	115.56	73.97	0.21	0.37
1.250	65.23	99.04	72.27	0.13	0.37
1.500	56.43	82.52	72.27	0.05	0.37
1.750	47.63	66.00	78.45	0.00	0.37
2.000	36.84	49.48	82.59	0.00	0.37
2.100	30.23	42.87	83.74	0.00	0.37
2.350	13.71	26.51	85.57	0.00	0.37
2.600	-2.81	17.71	86.01	0.00	0.37
2.850	-19.33	8.91	85.11	0.00	0.37
3.100	-35.85	0.11	82.78	0.00	0.37
3.350	-52.37	-8.69	85.24	0.00	0.37
3.600	-68.89	-17.49	111.08	0.00	0.37
3.850	-85.41	-26.29	189.96	0.00	0.37
4.100	-101.93	-35.09	664.86	0.00	0.37
4.200	-108.53	-38.61	920.00	0.00	0.37

COLUMN REACTIONS

Support	Dead Load(kN)	Live Load(kN)	Dead + Live(kN)	Ultimate(kN)
1	72.33	22.71	95.04	144.21
2	208.58	63.90	272.48	394.26
3	51.25	15.09	66.34	108.53

PROKON
Software Consultants (Pty) Ltd
Internet: http://www.prokon.com
E-Mail : mail@prokon.com
Job Number | Sheet
Job Title
Client
Calcs by | Checked by | Date

COLUMN MOMENTS (Ultimate limit state)

Columns below

Support No.	Bending Moment(kNm) Min.	Max.	Shear Force (kN) Min.	Max.
1	0.00	0.00	0.00	0.00
2	0.00	0.00	0.00	0.00
3	0.00	0.00	0.00	0.00

Columns above

Support No.	Bending Moment(kNm) Min.	Max.	Shear Force (kN) Min.	Max.
1	0.00	0.00	0.00	0.00
2	0.00	0.00	0.00	0.00
3	0.00	0.00	0.00	0.00

ELASTIC DEFLECTIONS (Alternate spans loaded - positive downward)

Modulus of elasticity: Ec = 20 + fcu/5 = 28.0 Gpa

SPAN 1

Position(m)	Min.Deflection(mm)	Max.Deflection(mm)
0.000	-0.00	-0.00
0.250	0.19	0.30
0.500	0.37	0.57
0.750	0.53	0.83
1.000	0.68	1.06
1.250	0.80	1.25
1.500	0.89	1.41
1.750	0.96	1.52
2.000	0.99	1.59
2.250	0.99	1.60
2.400	0.97	1.58
2.400	0.97	1.58
2.650	0.90	1.51
2.900	0.81	1.38
3.150	0.69	1.22
3.400	0.56	1.03
3.650	0.42	0.82
3.900	0.29	0.61
4.150	0.17	0.41
4.400	0.08	0.23
4.650	0.02	0.07
4.800	0.00	0.00

SPAN 2

Position(m) Min.Deflection(mm) Max.Deflection(mm)

0.000	0.00	0.00
0.250	-0.08	0.01
0.500	-0.12	0.05
0.750	-0.12	0.12
1.000	-0.09	0.21
1.250	-0.04	0.31
1.500	0.01	0.41
1.750	0.08	0.50
2.000	0.13	0.57
2.100	0.15	0.59
2.100	0.15	0.59
2.350	0.18	0.61
2.600	0.20	0.60
2.850	0.20	0.56
3.100	0.19	0.50
3.350	0.16	0.42
3.600	0.13	0.31
3.850	0.08	0.19
4.100	0.02	0.06
4.200	0.00	0.00

LONGTERM DEFLECTIONS (All spans loaded - positive downward)

Symbols: DS : Shrinkage deflection.
DL : Long-term deflection under permanent load.
DI : Instantaneous deflection under short-term load.
DT : Total long-term deflection.

SPAN 1

Position(m)	DS(mm)	DL(mm)	DI(mm)	DT(mm)
0.000	-0.00	0.00	0.00	-0.00
0.250	0.25	1.26	0.39	1.90
0.500	0.48	2.47	0.76	3.71
0.750	0.69	3.56	1.09	5.35
1.000	0.88	4.49	1.37	6.74
1.250	1.03	5.25	1.60	7.87
1.500	1.14	5.81	1.77	8.72
1.750	1.22	6.19	1.88	9.28
2.000	1.26	6.36	1.93	9.55
2.250	1.26	6.34	1.93	9.53
2.400	1.24	6.23	1.90	9.37
2.400	1.24	6.23	1.90	9.37
2.650	1.19	5.91	1.81	8.90
2.900	1.10	5.41	1.66	8.17
3.150	0.97	4.76	1.47	7.20
3.400	0.82	3.99	1.23	6.04
3.650	0.65	3.15	0.97	4.77
3.900	0.48	2.28	0.70	3.47
4.150	0.31	1.46	0.45	2.22
4.400	0.16	0.74	0.23	1.14
4.650	0.05	0.21	0.07	0.33
4.800	-0.00	0.00	-0.00	0.00

SPAN 2

Position(m)	DS(mm)	DL(mm)	DI(mm)	DT(mm)

PROKON
Software Consultants (Pty) Ltd
Internet: http://www.prokon.com
E-Mail : mail@prokon.com
Job Number | Sheet
Job Title
Client
Calcs by | Checked by | Date

0.000	-0.00	0.00	0.00	-0.00
0.250	-0.02	-0.17	-0.05	-0.24
0.500	-0.00	-0.13	-0.04	-0.17
0.750	0.05	0.09	0.02	0.16
1.000	0.13	0.42	0.12	0.67
1.250	0.21	0.80	0.23	1.25
1.500	0.30	1.19	0.35	1.84
1.750	0.38	1.56	0.46	2.41
2.000	0.45	1.88	0.56	2.89
2.100	0.48	1.98	0.59	3.05
2.100	0.48	1.98	0.59	3.05
2.350	0.51	2.17	0.65	3.34
2.600	0.52	2.25	0.68	3.45
2.850	0.51	2.19	0.67	3.37
3.100	0.46	2.01	0.61	3.08
3.350	0.39	1.71	0.52	2.61
3.600	0.29	1.29	0.38	1.96
3.850	0.17	0.78	0.23	1.18
4.100	0.05	0.23	0.07	0.34
4.200	-0.00	0.00	-0.00	-0.00

QUANTITIES

Section	Area(m²)
1	0.200

Total weight of beam = 43.20 kN

3. RC & STEEL COLUMN DESIGN

Calculation/Sketch

Meinhardt Infrastructure Pte Ltd
Consulting Engineers, Planners & Managers

Site **JA Building 15**
Column 15-1-B

Date 5/28/2008 Job No.

Designed by PTH Sheet No.

LEVEL	DESCRIPTION		DIMENSION m	m	m	UNIT LOAD (kN/m3)	DEAD LOAD kN	LIVE LOAD kN	DL+LL per flr kN	TOTAL DL+LL kN	CUMULATIVE LOAD (Service) kN	(Ultimate) kN
Roof	200	thk rc slab	0.2 x	1.47 x	2.4 x	24 =	17					
	200	thk finishes & RC Plinth	0.2 x	1.47 x	2.4 x	24 =	17					
	50	thk sand deposit	0.05 x	1.47 x	2.4 x	20 =	4					
	Column	(400 x 400)	0.4 x	0.4 x	3.65 x	24 =	15					
	150	thk RC parapet	0.15 x	1.62 x	3.87 x	24 =	23					
		M&E	0.3 x	1.62 x	3.87 x	1 =	2					
TOTAL OF	Beam	(300 x 500)	0.3 x	0.5 x	2.935 x	24 =	11					
1 Level	Beam	(400 x 500)	0.4 x	0.5 x	2.935 x	24 =	15					
	LL :	Imposed	1 x	1.47 x	2.4 x	5 =		18				
							104	18	122	122	122	175

Column 15-2-B

LEVEL	DESCRIPTION		DIMENSION m	m	m	UNIT LOAD (kN/m3)	DEAD LOAD kN	LIVE LOAD kN	DL+LL per flr kN	TOTAL DL+LL kN	CUMULATIVE LOAD (Service) kN	(Ultimate) kN
Roof	200	thk rc slab	0.2 x	2.65 x	4.5 x	24 =	58					
	200	thk finishes & RC Plinth	0.2 x	2.65 x	4.5 x	24 =	58					
	50	thk sand deposit	0.05 x	2.65 x	4.5 x	20 =	12					
	Column	(400 x 400)	0.4 x	0.4 x	3.65 x	24 =	15					
	150	thk RC parapet	0.15 x	1.62 x	7.1 x	24 =	42					
		M&E	0.3 x	1.62 x	3.87 x	1 =	2					
1 Level	Beam	(400 x 500)	0.4 x	0.5 x	7.15 x	24 =	35					
	LL :	Imposed	1 x	2.65 x	4.5 x	5 =		60				
							233	60	293	293	293	423

Column 15-3-B

LEVEL	DESCRIPTION		DIMENSION m	m	m	UNIT LOAD (kN/m3)	DEAD LOAD kN	LIVE LOAD kN	DL+LL per flr kN	TOTAL DL+LL kN	CUMULATIVE LOAD (Service) kN	(Ultimate) kN
Roof	200	thk rc slab	0.2 x	1.47 x	2.1 x	24 =	15					
	200	thk finishes & RC Plinth	0.2 x	1.47 x	2.1 x	24 =	15					
	50	thk sand deposit	0.05 x	1.47 x	2.1 x	20 =	4					
	CHS Col	(323.9 x 12.5)					4					
	150	thk RC parapet	0.15 x	1.62 x	3.87 x	24 =	23					
		M&E	0.3 x	1.62 x	3.87 x	1 =	2					
TOTAL OF	Beam	(300 x 500)	0.3 x	0.5 x	2.935 x	24 =	11					
1 Level	Beam	(400 x 500)	0.4 x	0.5 x	2.935 x	24 =	15					
	LL :	Imposed	1 x	1.47 x	2.1 x	5 =		16				
							89	16	105	105	105	151

Site: JA BUILDING 15

Date: 28/05/2008

Job No.

Designed by: PTH

Sheet No.

STEEL COLUMN DESIGN

AXIAL LOADING

DL = 89 kN
LL = 16 kN

ULTIMATE AXIAL LOAD = 151 kN

CHOOSE SECTION CHS 273 x 10 - F_y = 317 MPa

* Mass per metre : 64.9 kg
Area of cross section : 82.6 cm^2

Ratio for local buckling: D/t = 27.3 < $80\varepsilon^2$ = 51.4 - NON SLENDER

I = 7150 cm^4
r = 9.31 cm
Z = 524 cm^3
S = 692 cm^3

J = 14300 cm^4
C = 1050 cm^3

* COMPRESSION RESISTANCE
FOR UNBRACED, UNRESTRAINT COLUMN,
EFFECTIVE LENGTH L_E = $L_0 \times 1.2 \times 1$
= 4.38

$$\lambda = \frac{L_E}{r_x} = \frac{4.38}{9.31 \times 10^{-2}} = 47.1$$

P_c = 317 N/mm^2

* $P_c = A_g P_c$
= 2619 kN > 151 kN - OK

JA BUILDING 15 COLUMNS 15 - 1 - B / 15 - 2 - B

C13

General column design by *PROKON*. (GenCol Ver W2.3.07 - 13 Dec 2007)

Design code : CP65 - 1999

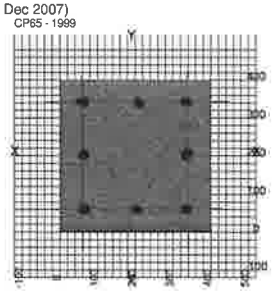

General design parameters:

Given:
Lo = 3.650 m
fcu = 40 MPa
fy = 460 MPa
Ac = 159058 mm²

Main steel provided 8 T20
Asc= 2510 mm²
Asc/Ac = 1.57%

Assumptions:
(1) The general conditions of clause 3.8.1 are applicable.
(2) The specified design axial loads include the self-weight of the column.
(3) The design axial loads are taken constant over the height of the column.

Design approach:

The column is designed using an iterative procedure:
(1) An area of reinforcement is chosen.
(2) The column design charts are constructed.
(3) The corresponding slenderness moments are calculated.
(4) The design axis and design ultimate moment are determined .
(5) The design axial force and moment capacity is checked on the relevant design chart.
(6) The safety factor is calculated for this load case.
(7) The procedure is repeated for each load case.
(8) The critical load case is identified as the case yielding the lowest safety factor about the design axis

Through inspection:
Load case 2 (Col 15-2-B) is critical.

Check column slenderness:

End fixity and bracing for bending about the Design axis:
At the top end: Condition 1 (fully fixed).
At the bottom end: Condition 1 (fully fixed).
The column is unbraced.
ß = 1.20 *Table 3.21*

Effective column height:
le = ß· Lo = 4.380 m

Check if the column is slender: *3.8.1.3*
le/h = 11.0 > 10
∴ The column is slender.

Initial moments:

The initial end moments about the X-X axis:
M1 = Smaller initial end moment = 0.0 kNm
M2 = Larger initial end moment = 0.0 kNm

The initial moment near mid-height of the column : *3.8.3.2*
∴ Mi = 0.4M1 + 0.6M2 ≥ 0.4M2 = 0.0 kNm

The initial end moments about the Y-Y axis:
M1 = Smaller initial end moment = 0.0 kNm
M2 = Larger initial end moment = 0.0 kNm

The initial moment near mid-height of the column : *3.8.3.2*
∴ Mi = 0.4M1 + 0.6M2 ≥ 0.4M2 = 0.0 kNm

Deflection induced moments: *3.8.3.1*

Design ultimate capacity of section under axial load only:
Nuz = 0.45· fcu· Ac + 0.87· fy· Asc = 3868.8 kN

Maximum allowable stress and strain:
Allowable compression stress in steel, fsc = 0.87· fy = 400.2 MPa
Allowable tensile stress in steel, fst = 0.87· fy = 400.2 MPa
Allowable tensile strain in steel, ey = fst/Es = 0.0020 m/m
Allowable compressive strain in concrete, ec = 0.0035 m/m

For bending about the weakest axis:
Weakest axis lies at an angle of -135.00° to the X-X axis
Overall dimension perpendicular to weakest axis h-dc = 495mm
Balanced neutral axis depth, xb = ec/(ec+es)· (h-dc) =314.9 mm
Nbal = 0.44· b· fcu· xbal + ∑(Ast· fs + Asc· fsd) = 1561.0 kN
K = (Nuz - N) / (Nuz - Nbal) = 1.000≤ 1.0
ßa = (1/2000)· (le/h)² = 0.060
∴ Madd = N· ßa· K· h = 14.5 kNm
∴ Maddx = Madd*cos(-135.00°) = 10.2 kNm
∴ Maddy = Madd*sin(-135.00°) = 10.2 kNm

Design ultimate load and moment:

Design axial load:
P_u = 423.0 kN

For bending about the X-X axis, the maximum design moment is the greatest of: *3.8.3.7*
(a) M2 + Maddx = 10.2 kNm
(b) emin· N = 8.5 kNm
∴ Mx = 10.2 kNm

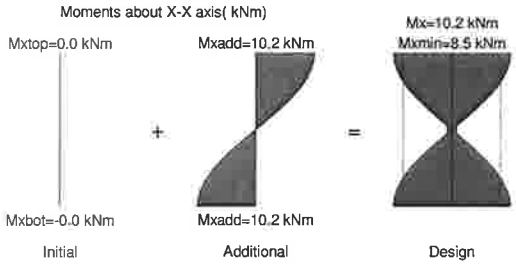

For bending about the Y-Y axis, the maximum design moment is the greatest of: 3.8.3.7
(a) M2 + Maddy = 10.2 kNm
(b) emin· N = 8.5 kNm
∴ My = 10.2 kNm

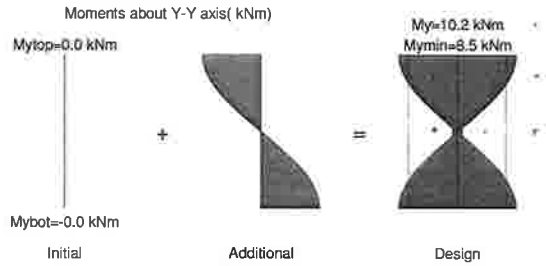

Check for miminum eccentricity: 3.8.2.4
Check that the eccentricity exceeds the minimum in the plane of bending:
Use emin = 20mm
∴ Mmin = 8.5 kNm about the X-X axis.

Design of column section for ULS:

The column is checked for applied moment about the design axis.
Through inspection: the critical section lies at the top end of the column.
The design axis for the critical load case 2 lies at an angle of 135.00° to the X-axis
The safety factor for the critical load case 2 is 7.46

For bending about the design axis:

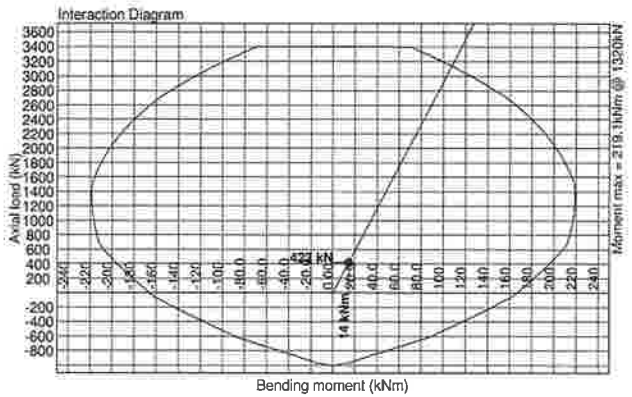

Moment distribution along the height of the column for bending about the design axis:
At the top, Mx = 14.5 kNm
Near mid-height, Mx = 8.5 kNm
At the bottom, Mx = 14.5 kNm

Stresses at the top end of the column for the critical load case 2

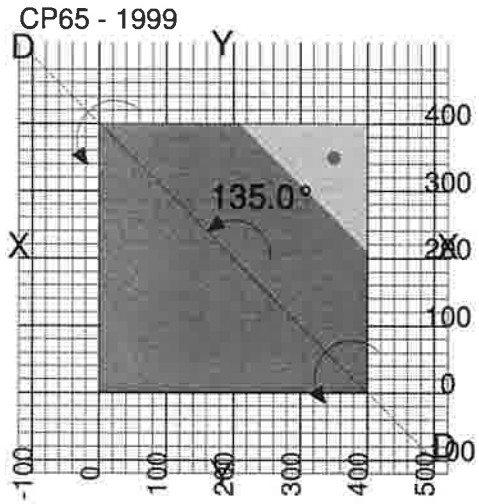

Summary of design calculations:

Design results for all load cases:

Load case	Axis	N (kN)	M1 (kNm)	M2 (kNm)	Mi (kNm)	Madd (kNm)	Design	M (kNm)	M' (kNm)	Safety factor
Load case 1 Col 15-1-B	X-X Y-Y	175.0	0.0 0.0	0.0 0.0	0.0 0.0	0.0 0.0	Top	4.2 4.2	6.0	18.035
Load case 2 Col 15-2-B	X-X Y-Y	423.0	0.0 0.0	0.0 0.0	0.0 0.0	10.2 10.2	Top	10.2 10.2	14.5	7.461

Load case 2 (Col 15-2-B) is critical.

4. RETAINING WALL ANALYSIS & DESIGN

Retaining Wall Design : Ver W2.3.06 - 01 Oct 2007
Title : Cantilever Wall

C14

Input Data

Wall Dimensions						Unfactored Live Loads			General Parameters				Design Parameters		
H1	(m)	4.13	C	(m)	0.5	W	(kN/m²)	10	Soil frict ϕ	(°)	35		SF Overt.		2
H2	(m)	0.5	F	(m)	0.5	P	(kN)	30	Fill slope β	(°)	0		SF Slip		1.5
H3	(m)		xf	(m)	0.00	xp	(m)	0.175	Wall frict δ	(°)	23		ULS DL Factor		1.4
Hw	(m)	0	At	(m)	0.35	L	(kN/m)	30	ρ Conc	kN/m³	24		ULS LL Factor		1.6
Hr	(m)	0	Ab	(m)	0.35	xl	(m)	-5.3	ρ Soil	kN/m³	20		Pmax	(kPa)	450
B	(m)	5.65	Cov wall	mm	75	Lh	(kN/m)	0	fcu	(MPa)	19		Soil Poisson υ		0.3
D	(m)	0	Cov base	mm	75	x	(m)	0	fy	(MPa)	460		DL Factor Ovt.		1.5

Seepage allowed
Active pressure applied on back of shear key for sliding

Theory : Coulomb
Wall type : Cantilever

Note:
This seismic analysis includes the stability check for retaining wall, and the forces output is used to design the required reinforcement for the retaining wall.

SEISMIC ANALYSIS SETTINGS:

Seismic Analysis ON/OFF:ON

Hor Accel.	(g)	0.15
Vert Accel.	(g)	0.1
Include LL's		Y

VALUES OF PRESSURE COEFFICIENTS:

Active Pressure coefficient Ka :0.244
Passive Pressure coefficient Kp :9.776
Seismic Active Pressure coefficient Kas :0.391
Seismic Passive Pressure coefficient Kps :7.539
Base frictional constant μ :0.700

FORCES ACTING ON THE WALL AT SLS:
All forces/moments are per m width

Description	FORCES (kN) and their LEVER ARMS (m) F Horizontal left (+)	Lever arm	F Vertical down (+)	Lever arm
Destabilizing forces:				
Total Active pressure Pa	77.218	2.007	32.777	6.000
Siesmic component of Pa	28.985	2.778	12.304	6.000
As a result of surcharge w	15.010	2.315	6.371	6.000
Siesmic wall inertia	14.403	0.862		
Stabilizing forces:				
Passive pressure on base Pp	-42.670	0.263		
Siesmic component of Pp	11.399	0.600		
Weight of the wall + base			96.023	3.696
Weight of soil on the base			0.000	0.000
Point load of 27.00 kN on wall			6.538	5.825
Line load of 27.00 kN/m on wall			27.000	0.350
UDL of 9.0 kPa			0.000	6.000

EQUILIBRIUM CALCULATIONS AT SLS
All forces/moments are per m width

1.Moment Equilibrium

Point of rotation: bottom front corner of shear key.

For Overturning moment Mo calculate as follows:
Mo = Sum(hor. forces x l.a.) - Sum(vert. forces x l.a.)
For Stabilizing moment Mr calculate as follows:
Mr = -Sum(hor. forces x l.a.) + Sum(vert. forces x l.a.)
where l.a. = lever arm of each force.

Stabilizing moment Mr : 413.68 kNm
Destabilizing moment Mo : -32.56 kNm

Safety factor against overturning = Mr/Mo = -12.705

***** NO OVERTURNING POSSIBLE *****

2.Force Equilibrium at SLS

Sum of Vertical forces Pv : 168.71 kN
Frictional resistance Pfric : 118.13 kN
Passive Pressure on shear key : 32.72 kN
Passive pressure on base : 42.67 kN
=> Total Horiz. resistance Fr : 193.52 kN

Horizontal sliding force on wall Fhw : 107.72 kN
Horizontal sliding force on shear key Fht : 0.00 kN
=> Total Horizontal sliding force Fh : 107.72 kN

Safety factor against overall sliding = Fr/Fh = 1.748

FORCES ACTING ON THE WALL AT ULS:
All forces/moments are per m width

Description	FORCES (kN) and their LEVER ARMS (m) F Horizontal left (+)	Lever arm	F Vertical down (+)	Lever arm
Destabilizing forces:				
Total Active pressure Pa	117.381	2.031	45.888	6.000
Siesmic component of Pa	46.377	2.778	19.686	6.000
As a result of surcharge w	24.016	2.315	10.194	6.000
Siesmic wall inertia	23.045	0.862		
Stabilizing forces:				
Passive pressure on base Pp	-64.005	0.263		
Siesmic component of Pp	17.099	0.600		
Weight of the wall + base			144.034	3.696
Weight of soil on the base			0.000	0.000
Point load of 40.50 kN on wall			9.806	5.825
Line load of 40.50 kN/m on wall			40.500	0.350
UDL of 13.5 kPa			0.000	6.000

EQUILIBRIUM CALCULATIONS AT ULS
All forces/moments are per m width

1.Moment Equilibrium

Point of rotation: bottom front corner of shear key.

For Overturning moment Mo calculate as follows:
Mo = Sum(hor. forces x l.a.) - Sum(vert. forces x l.a.)
For Stabilizing moment Mr calculate as follows:
Mr = -Sum(hor. forces x l.a.) + Sum(vert. forces x l.a.)
where l.a. = lever arm of each force.

Stabilizing moment Mr : 620.51 kNm
Destabilizing moment Mo : -22.32 kNm

Safety factor against overturning = Mr/Mo = -27.795

***** NO OVERTURNING POSSIBLE *****

2.Force Equilibrium at ULS

Sum of Vertical forces Pv : 253.06 kN
Frictional resistance Pfric : 177.20 kN
Passive Pressure on shear key : 49.07 kN
Passive pressure on base : 64.01 kN
=> Total Horiz. resistance Fr : 290.28 kN

Horizontal sliding force on wall Fhw : 165.96 kN
Horizontal sliding force on shear key Fht : 0.00 kN
=> Total Horizontal sliding force Fh : 165.96 kN

Safety factor against overall sliding = Fr/Fh = 1.702

SOIL PRESSURES UNDER BASE AT SLS

Maximum pressure : 38.10 kPa
Minimum pressure : 18.14 kPa
Maximum pressure occurs at left hand side of base

WALL MOMENTS (ULS) AND REINFORCEMENT TO BS8110 - 1997 *** Fcu = 19 MPa

Position from base top (m)	Moment (kNm)	Front Reinforcing (mm²/m)	Back Reinforcing (mm²/m)	Nominal (0.13%) (mm²/m)
0.00	182.29	0.00	1939.56	455.00
0.07	174.46	0.00	1832.88	455.00
0.15	166.83	0.00	1732.05	455.00
0.22	159.39	0.00	1636.57	455.00
0.29	152.14	0.00	1545.99	455.00
0.36	145.09	0.00	1459.93	455.00
0.44	138.22	0.00	1378.06	455.00
0.51	131.54	0.00	1300.09	455.00
0.58	125.05	0.00	1225.78	455.00
0.65	118.74	0.00	1154.90	455.00
0.73	112.61	0.00	1087.26	455.00
0.80	106.66	0.00	1022.68	455.00
0.87	100.90	0.00	961.01	455.00
0.94	95.31	0.00	902.10	455.00
1.02	89.90	0.00	845.82	455.00
1.09	84.67	0.00	792.05	455.00
1.16	79.60	0.00	740.70	455.00
1.23	74.71	0.00	691.65	455.00
1.31	70.00	0.00	644.82	455.00
1.38	65.45	0.00	600.12	455.00
1.45	61.06	0.00	557.49	455.00
1.52	56.85	0.00	516.84	455.00
1.60	52.80	0.00	479.90	455.00
1.67	48.91	0.00	444.55	455.00
1.74	45.18	0.00	410.68	455.00
1.81	41.61	0.00	378.25	455.00
1.89	38.21	0.00	347.27	455.00
1.96	34.95	0.00	317.72	455.00
2.03	31.86	0.00	289.58	455.00
2.11	28.92	0.00	262.83	455.00
2.18	26.13	0.00	237.48	455.00
2.25	23.49	0.00	213.49	455.00
2.32	21.00	0.00	190.86	455.00
2.40	18.66	0.00	169.58	455.00
2.47	16.46	0.00	149.63	455.00
2.54	14.41	0.00	130.99	455.00
2.61	12.50	0.00	113.66	455.00
2.69	10.74	0.00	97.61	455.00
2.76	9.11	0.00	82.84	455.00
2.83	7.63	0.00	69.33	455.00
2.90	6.28	0.00	57.07	455.00
2.98	5.06	0.00	46.04	455.00
3.05	3.99	0.00	36.23	455.00

REQUIRE.
$A_s = 1906\ mm^2$ for $f_{cu} = 40MPa$
PROVIDE
T16@ 100 mm
$A_s = 2011 mm^2$

PROKON
Software Consultants (Pty) Ltd
Internet: http://www.prokon.com
E-Mail : mail@prokon.com
Job Number | Sheet
Job Title
Client
Calcs by | Checked by | Date

3.12	3.04	0.00	27.62	455.00
3.19	2.22	0.00	20.21	455.00
3.27	1.54	0.00	13.98	455.00
3.34	0.98	0.00	8.91	455.00
3.41	0.55	0.00	4.99	455.00
3.48	0.24	0.00	2.21	455.00
3.56	0.06	0.00	0.55	455.00
3.63	0.00	0.00	0.00	455.00

SHEAR CHECK AT WALL-BASE JUNCTION TO BS8110 - 1997

Shear force at bottom of wall V = 150.9 kN
Shear stress at bottom of wall v = 0.57 MPa OK
Allowable shear stress vc = 0.62 MPa (based on Wall tensile reinf.)

Sketch of Wall

Design code: BS8110 - 1997

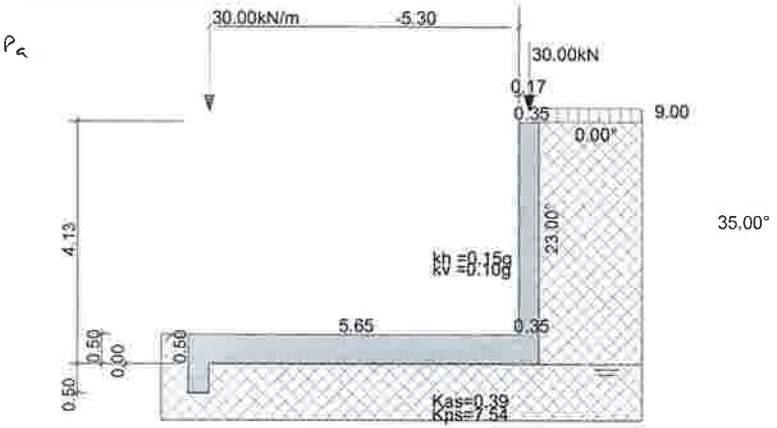

Wall type: Cantilever
Theory: Coulomb

SFslip = 1.75
SFslip (ULS) = 1.70
SFovt = 12.70
SFovt (ULS) = -27.88

SF Ovt<0 No Overturning posssible

PROKON Software Consultants (Pty) Ltd Internet: http://www.prokon.com E-Mail : mail@prokon.com	Job Number		Sheet
	Job Title		
	Client		
	Calcs by	Checked by	Date

Wall Bending Moments

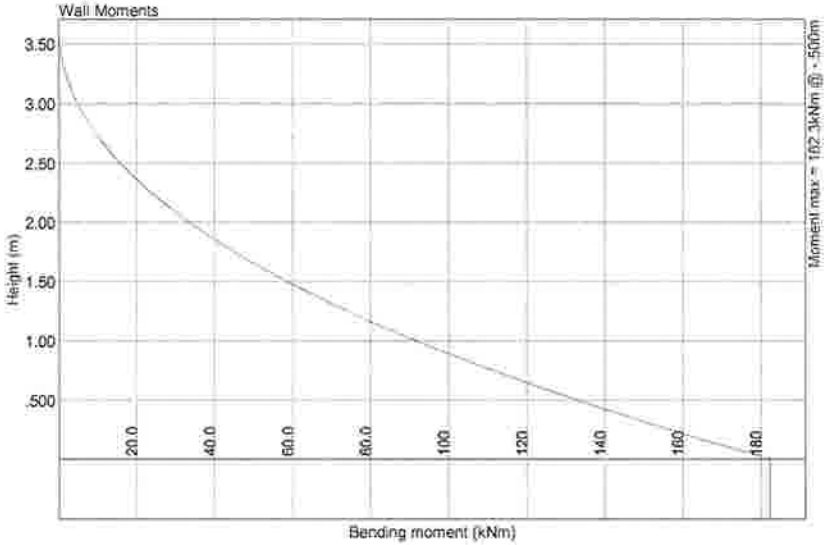

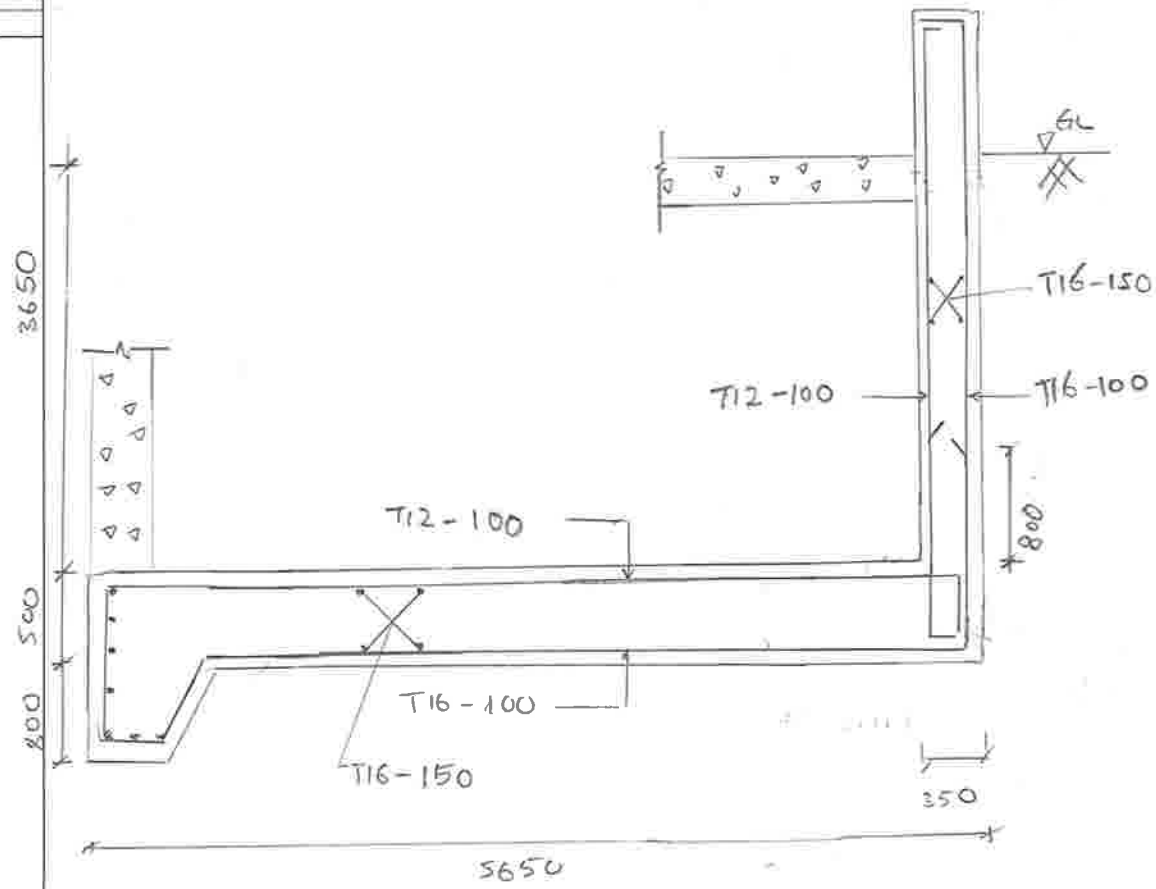

Calculation/Sketch Meinhardt Infrastructure Pte Ltd Consulting
engineers, Planners & Managers

168 Jalan Bukit Merah
08 - 01, Surbana One
Singapore 150168
Tel: (65) 6377 9700
Fax: (65) 6377 9733

Project: **JA B15** Date: 5/28/2008 Job No.

Description: Retaining Wall Crackwidth Check

Designed by: PTH Checked by: Sheet No. 0

Dimension of Structures

Width	b =	1000	mm
Depth, h	h =	350	mm
Cover tension, c	c =	70	mm
cover compression	c' =	40	mm
Distance from the outmost rebar to the plane where crack width is calculated, c_o	=	40	mm
Allowable crackwidth	w =	0.25	mm

Properties of Concrete

Cube Strength	f_{cu} =	40	N/mm^2

Properties of Reinforcement

Yield Strength	f_y =	460	N/mm^2
Youngs Modulus	E_s =	200	kN/mm^2

Forces

Bending M, service	M =	182	kNm
Axial force,service	N =	30	kN

Both M and N must be greater than zero

M, ultimate	M_{ult} =	182	kNm
Shear, ultimate (Capacity)	=	**151**	kN

RESULTS

Crackwidth	ω_d =	**0.205**	mm
Max tesnsile stress in bottome steel	f_y =	**0**	N/mm^2
Max compressive stress in concrete	f_{cc} =		N/mm^2
Flexure	**BM O.K. for ULS**	**1.42**	
Shear	**Shear reinforcement not required**	--	mm^2/mm

Reinforcement for Flexure Tension

First layer (bottom B1)

Bar size	=	**16** mm
Spacing, s	=	**100** mm
Distribution bar Dia,d_L	=	10 mm

Second layer (B2)

Bar size	=	0 mm
Spacing, s	=	0 mm
Vertical Spacing,s_v	=	0 mm

Third layer (B3)

Bar size	=	0 mm
Spacing, s	=	0 mm
Vertical Spacing,s_v	=	0 mm

Fourth layer (B4)

Bar size	=	0 mm
Spacing, s	=	0 mm
Vertical Spacing,s_v	=	0 mm

Reinforcement for Compression

First layer (top T1)

Bar size	=	13 mm
Spacing, s	=	150 mm
Distribution bar Dia,d_L	=	0 mm

Second layer (T2)

Bar size	=	0 mm
Spacing, s	=	0 mm
Vertical Spacing,s_v	=	0 mm

Available Rebar Diameters
ϕ mm
0 mm
13 mm
16 mm
20 mm
25 mm
28 mm
32 mm
40 mm
50 mm

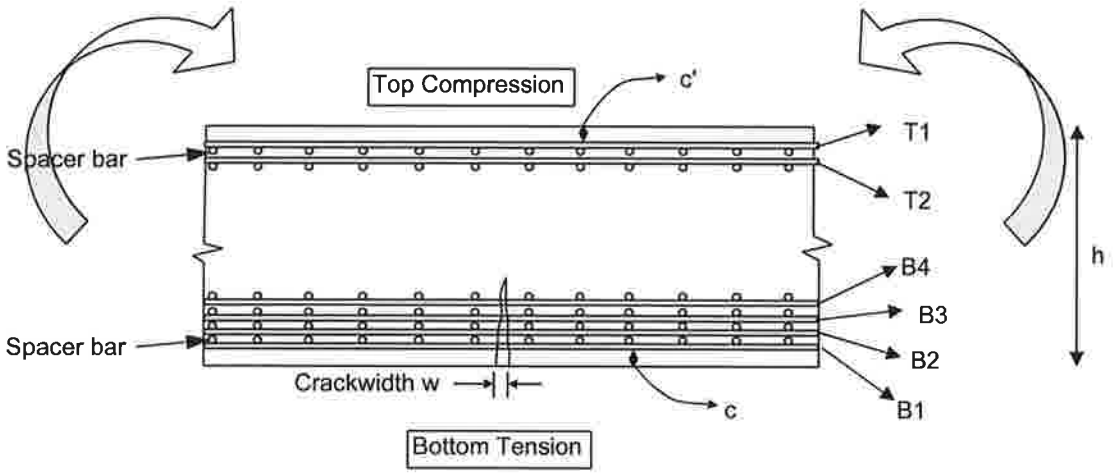

Meinhardt Infrastructure Pte Ltd
Consulting engineers, Planners & Managers

168 Jalan Bukit Merah
08 - 01, Surbana One
Singapore 150168
Tel: (65) 6377 9700
Fax: (65) 6377 9733

Project: **JA Building 15** Date: 5/28/2008 Job No.

Description: Retaining Wall Crackwidth Check

Designed by: Sheet No.

Calculation of crackwidths in mature concrete according to BS 8007

Dimension of Structures

Width	b =	1000	mm
Depth	h =	350	mm
Cover	c =	70	mm
Distance from the outmost rebar to the plane where crack width is calculated, c_o	=	40	mm
Effective Depth, h_e	h_e =	320	mm
	a_{cr} =	68.58	mm
Allowable crackwidth	=	**0.25**	mm

Properties of Concrete

Concrete Strength	f_{cu} =	40	N/mm^2
Yougs Modulus (Long-term)	E_c =	14	kN/mm^2

Properties of Reinforcement

Yield Strenght	f_y =	460	N/mm^2
Yougs Modulus	E_s =	200	kN/mm^2
Modulus ratio	m =	14.29	

Forces

Bending M, service	M =	**100**	kN.m
Axial force,service	N =	**30**	kN

Both M and N must be greater than zero

Depth of neutral axis	x =	95.4072	mm
Axial stress in Conc. (eq.2)	f_{cc} =	8.39	N/mm^2
	=	0.210	f_{cu}
Axial Force in Concrete	F_c =	400.4	kN
Trial Depth of neutral axis	x =	95.41	mm
Check Axial Force	N =	**30**	kN

Strains

Strain at the level considered	ε_1 =	0.00141	
Strain due to stiffening effect of concrete between cracks	ε_2 =	0.00025	
Average strain at the level where cracking is considered	ε_m =	1E-03	
Design crack width	ω_d =	**0.205**	mm

Calculated crack width comply with requirements in DC? **YES**

Is x<0.5d?	**YES**
Is f_s<0.8f_y?	**YES**
Is f_c<0.45f_{cu}?	**YES**

Reinforcement for Flexure Tension

				Axial Force (kN)	Axial Stress (Mpa)
First layer (bottom B1)					
Bar size	=	**16**	mm		
Spacing, s	=	**100**	mm		
Distribution bar Dia,d_L	=	10	mm		
A_{st1}	=	2011	mm^2	420.9	209.4
Dist fr the con. face to c of steel,d_1	=	262	mm		
Second layer (B2)					
Bar size	=	**0**	mm		
Spacing, s	=	**0**	mm		
Vertical Spacing,s_v	=	0	mm		
A_{st2}	=	0	mm^2	0.0	0.0
Dist fr the con. face to c of steel,d_2	=	0	mm		
Third layer (B3)					
Bar size	=	**0**	mm		
Spacing, s	=	**0**	mm		
Vertical Spacing,s_v	=	0	mm		
A_{st2}	=	0	mm^2	0.0	0.0
Dist fr the con. face to c of steel,d_2	=	0	mm		
Fourth layer (B4)					
Bar size	=	0	mm		
Spacing, s	=	0	mm		
Vertical Spacing,s_v	=	0	mm		
A_{st2}	=	0	mm^2	0.0	0.0
Dist fr the con. face to c of steel,d_2	=	0	mm		

Reinforcement for Compression

First layer(top)					
Bar size	=	13	mm		
Spacing, s	=	150	mm		
cover, c'	=	40	mm		
Distribution bar Dia,d_L	=	0	mm		
Dist fr the con. face to c of steel,d_1'	=	46.5	mm		
A_{sc1}	=	885	mm^2	50.6	57.2
Second layer(lower)					
Bar size	=	0	mm		
Spacing, s	=	0	mm		
Vertical Spacing,s_v	=	0	mm		
Dist fr the con. face to c of steel,d_2'	=	0	mm		
A_{sc2}	=	0	mm^2	0.0	0.0

Note:

1) E_C =(20+0.2*Fcu) / 2 for long term crack width check, it may be taken as EC = 20+0.2*Fcu for short term.
2) For detailed calculation procedures & equations, please refer to the example using manual calculations.
3) The value of unfactored live load surcharge shall be taken as 17kN/m^2 in load combinations for the purposes of checking crack widths.
4) Designer shall provide the input for cells in red and blue.
5) For some cells, please read the comments for explanation.

Meinhardt Infrastructure Pte Ltd
Consulting engineers, Planners & Managers

168 Jalan Bukit Merah # 08 - 01,
Surbana One SIngapore 150168
Tel: (65) 6377 9700 Fax: (65) 6377 9733

Project: **JA Building 15** Date: 5/28/2008 Job No.

Description: Retaining Wall Crackwidth Check

Designed by: PTH Sheet No.

Calculation of flexure and shear reinforcement to BS 8110 Under Ultimate Load Condition

Dimension of Structures and material

Width	b =	1,000	mm
Depth, h	h =	350	mm
Cover tension, c	c =	70	mm
Effective Depth,	dm =	262	mm
Effective Depth'	d' =	47	mm
Concrete Strength	f_{cu} =	40	N/mm^2
Steel Yield Strength	f_y =	460	N/mm^2

Design for bending moment

M(ult) =	182	KNm	
K = M / (fcubd^2) =	0.066		**< 0.156, Comp. Reinf. not req'd**
Z< 0.95d =	249	mm	
Z = d*(0.5+sqrt(0.25-K/0.9)) =	241	mm	
Hence, Z =	241	mm	
Ast =	1,887	mm^2	
Comp. Reinf. Asc =	0	mm^2	
Ast(Req'd) =	1,887	mm^2	
Ast(Prov'd) =	2,011	mm^2	

BM O.K. for ULS

Design for Shear Force

Design Shear Force V(d)	=	151	KN	
Shear stress v(d)	=	0.576	N/mm^2	**< 5.0 or 0.8 x fcu^0.5 OK**
Design concrete shear stress v_c	=	0.753	N/mm^2	**Shear reinforcement not required**
Required Asv	=	--	mm^2/m	
--	=		--	
--	=	--	--	
--	=	--	--	

Site: JA B15 | Date | Job No.

Designed by | Sheet No.

RETAINING WALL (Design for horizontal reinforcement)

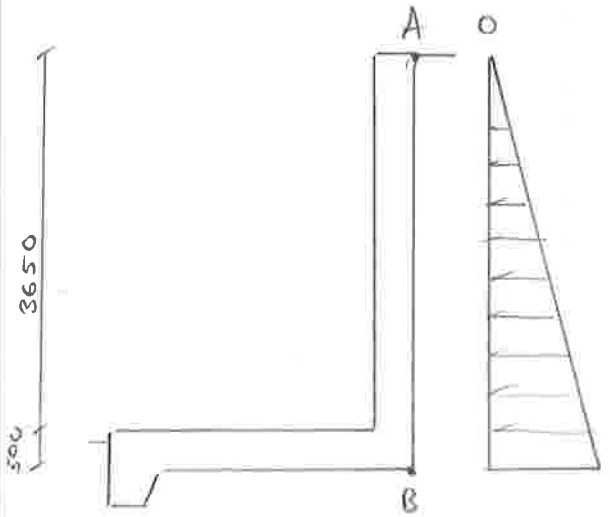

$\phi' = 35°$

$K_a = \frac{1-\sin\phi'}{1+\sin\phi'} = 0.27$

γ_{soil} at B $= K_a \times h \times \gamma'_{soil}$
$= 0.27 \times 4.15 \times 20$
$= 22.4 \ kN/m^2$

Assume average pressure acting on wall to be
$\frac{2}{3}\gamma_{soil} = \frac{2}{3} \times 22.4$
$= 15 \ kN/m^2$

FOR WALL HORIZONTAL REINFORCEMENT

DL

LL

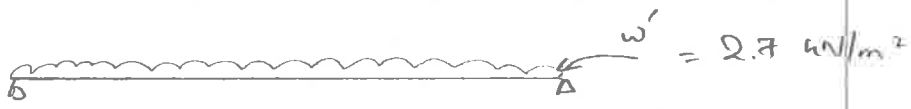

SURCHARGE = 10 kPa...
$w' =$ surcharge $\times K_a$
$= 10 \times 0.27 = 2.7 \ kN/m^2$

Site	JA B15 Wall Slab (Design as slab with four edges discontinuous)	Date 5/28/2008 Designed by PTH	Job No. Sheet No.

REINFORCED CONCRETE DESIGN TO BS 8110 : Part 1 - TWO WAY SLAB

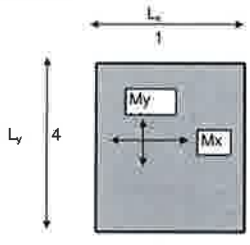

Type of Slab Panel :

9 - Four edges discont.

1. Material Properties

Concrete grade	f_{cu}	=	40	N/mm²
Steel grade	f_y	=	460	N/mm²
Concrete density	γ_c	=	24	kN/m³
Steel density	γ_s	=	78	kN/m³

2. Design Data

Thickness of slab	h	=	350	mm
Width of slab	b	=	1000	mm
Short span	L_x	=	7300	mm
Long span	L_y	=	9000	mm
Concrete Ten. cover	c_1	=	40	mm
Bar dia. in short direc.	D_x	=	16	mm
Bar dia. in long direc.	D_y	=	16	mm
Effect.depth in short	d_x	=	302.0	mm
Effect.depth in long	d_y	=	286.0	mm
Concrete comp. cover	c_2	=	70	mm

Span ratio	L_y/L_x	=	1.233	Two way slab design
No. of discont. edges		=	4.000	
Beta-y	β_y	=	0.056	
Gamma	γ	=	0.30	
End Conditions :			4/3 for continuous	
(β_1, β_2, β_3, β_4)			0 for discontinuous	
Beta-1 (short)	β_1	=	0.000	
Beta-2 (short)	β_2	=	0.000	
Beta-3 (long)	β_3	=	0.000	
Beta-4 (long)	β_4	=	0.000	
Beta-x	β_x	=	0.076	

3. Loadings

Total Dead Load	=	15.00	kN/m²
Total Live Load	=	2.70	kN/m²
Design load	=	25.32	kN/m²

Factors	DL	1.4
	LL	1.6

4. Analysis & Reinforcement Design

a Short Span

* Short span is hypothetical

Neg. m'nt at suppt.	M_3	=	0.00	kNm
Pos. m'nt at mid-span	M_x	=	102.79	kNm
Neg. m'nt at suppt.	M_4	=	0.00	kNm

Steel req'd

Neg. m'nt at suppt.	A_{3req}	=	455	mm²	A_{3prov} (top) =	1340	mm²	T16 - 150 c/c	O.K
Pos. m'nt at mid-span	A_{xreq}	=	895	mm²	A_{xprov} (bot) =	1340	mm²	T16 - 150 c/c	O.K
Neg. m'nt at suppt.	A_{4req}	=	455	mm²	A_{4prov} (top) =	1340	mm²	T16 - 150 c/c	O.K
					% of steel	**0.38**	%	**within limit ! O.K**	

b Long Span

Neg. m'nt at suppt.	M_1	=	0.00	kNm
Pos. m'nt at mid-span	M_y	=	75.56	kNm
Neg. m'nt at suppt.	M_2	=	0.00	kNm

Steel req'd

Neg. m'nt at suppt.	A_{1req}	=	455	mm²	A_{1prov} (top) =	1340	mm²	T16 - 150 c/c	O.K
Pos. m'nt at mid-span	A_{yreq}	=	695	mm²	A_{yprov} (bot) =	1340	mm²	T16 - 150 c/c	O.K
Neg. m'nt at suppt.	A_{2req}	=	455	mm²	A_{2prov} (top) =	1340	mm²	T16 - 150 c/c	O.K
					% of steel	**0.38**	%	**within limit ! O.K**	

5. Deflection Check

Basic span/depth	$(L_x/d)_b$	=	26.00	(Cantilever=7, S.Sup=20, C.Sup=26)
Tension mod. factor	m.f	=	1.722	
Comp. steel req'd ?		=	y	(Y=Yes, N=No)
Comp. mod. factor		=	1.077	
Allowable span/depth	$(L_x/d)_{all}$	=	48.20	
Actual span/depth	$(L_x/d)_{act}$	=	24.17	**O.K**

Compression Bar Dia = 12 mm

$A_{t\,prov}$ (top) = 754 mm² | T12 - 150 c/c

6. Shear Check (short span)

Shear at short span Vsx = 72.09 kN

SS CP 65 : Part 1 : 1999 - Table 3.16

Short span coefficient, βvx = 0.39
Long span coefficient, βvy = 0.33

Distance from Support (mm)	av (mm)	V (kN)	v (N/mm²)	vc (N/mm²)	Enhanced vc (N/mm²)	Asv/sv (mm²/m)	Remarks
d	302.0	66.12	0.22	0.61	1.21	**0.00**	**No Shear Links**
2d	604	60.16	0.20	0.61	0.61	**0.00**	**No Shear Links**
3d	906	54.19	0.18	0.61	0.61	**0.00**	**No Shear Links**

7. Shear Check (long span)

Shear at long span Vsy = 61.00 kN

Distance from Support (mm)	av (mm)	V (kN)	v (N/mm²)	vc (N/mm²)	Enhanced vc (N/mm²)	Asv/sv (mm²/m)	Remarks
d	286.0	57.12	0.20	0.62	1.25	**0.00**	**No Shear Links**
2d	572	53.24	0.19	0.62	0.62	**0.00**	**No Shear Links**
3d	858	49.37	0.17	0.62	0.62	**0.00**	**No Shear Links**