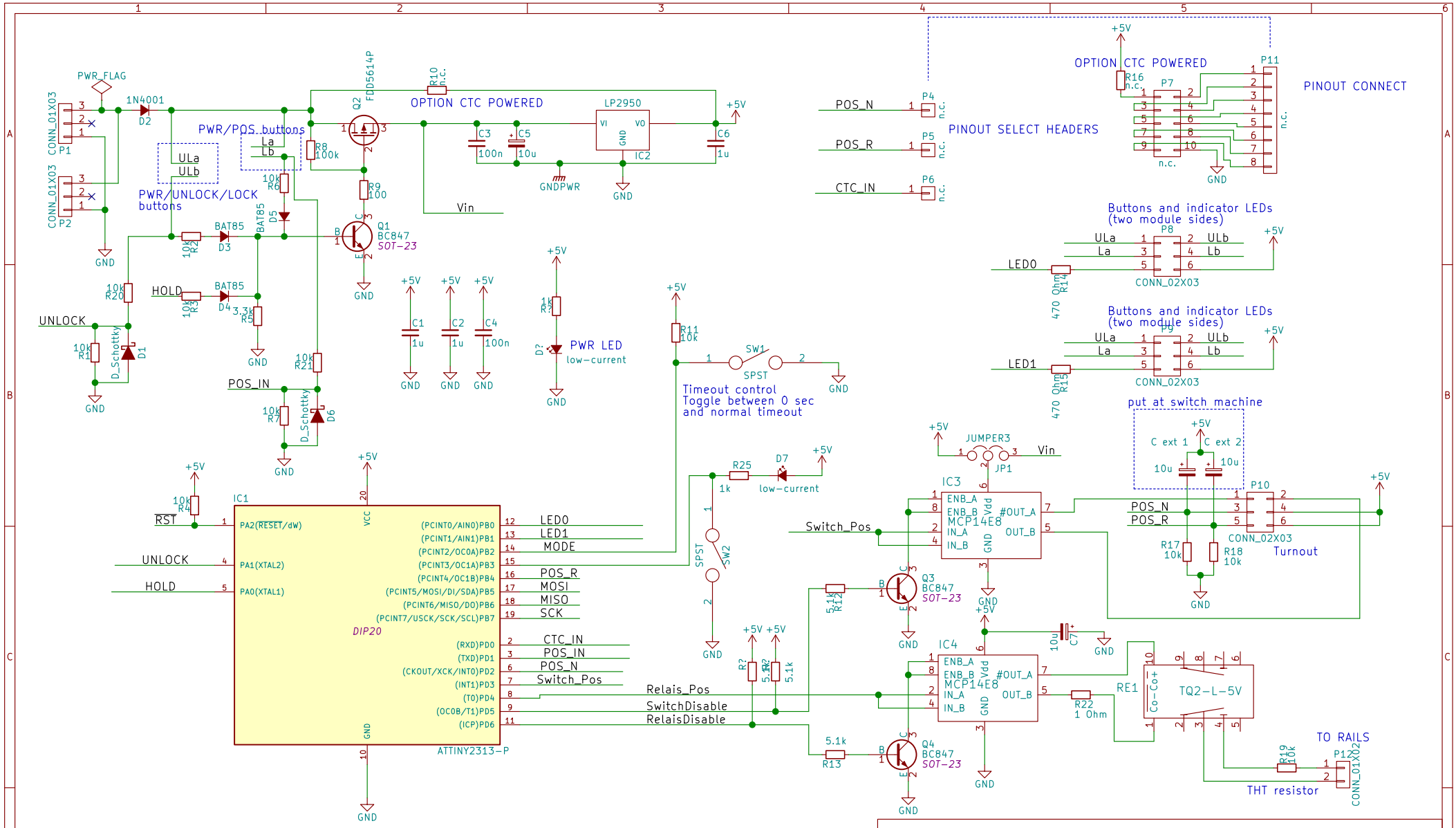

Sheet: /
File: sig-ctc-els.sch

Title: sig-ctc-ELS :::: Electric Lock Switch / CTC switch controller

Size: A4	Date: 30.11.2016	Rev: 1.0
KiCad E.D.A. eeschema 4.0.1-stable		Id: 1/1