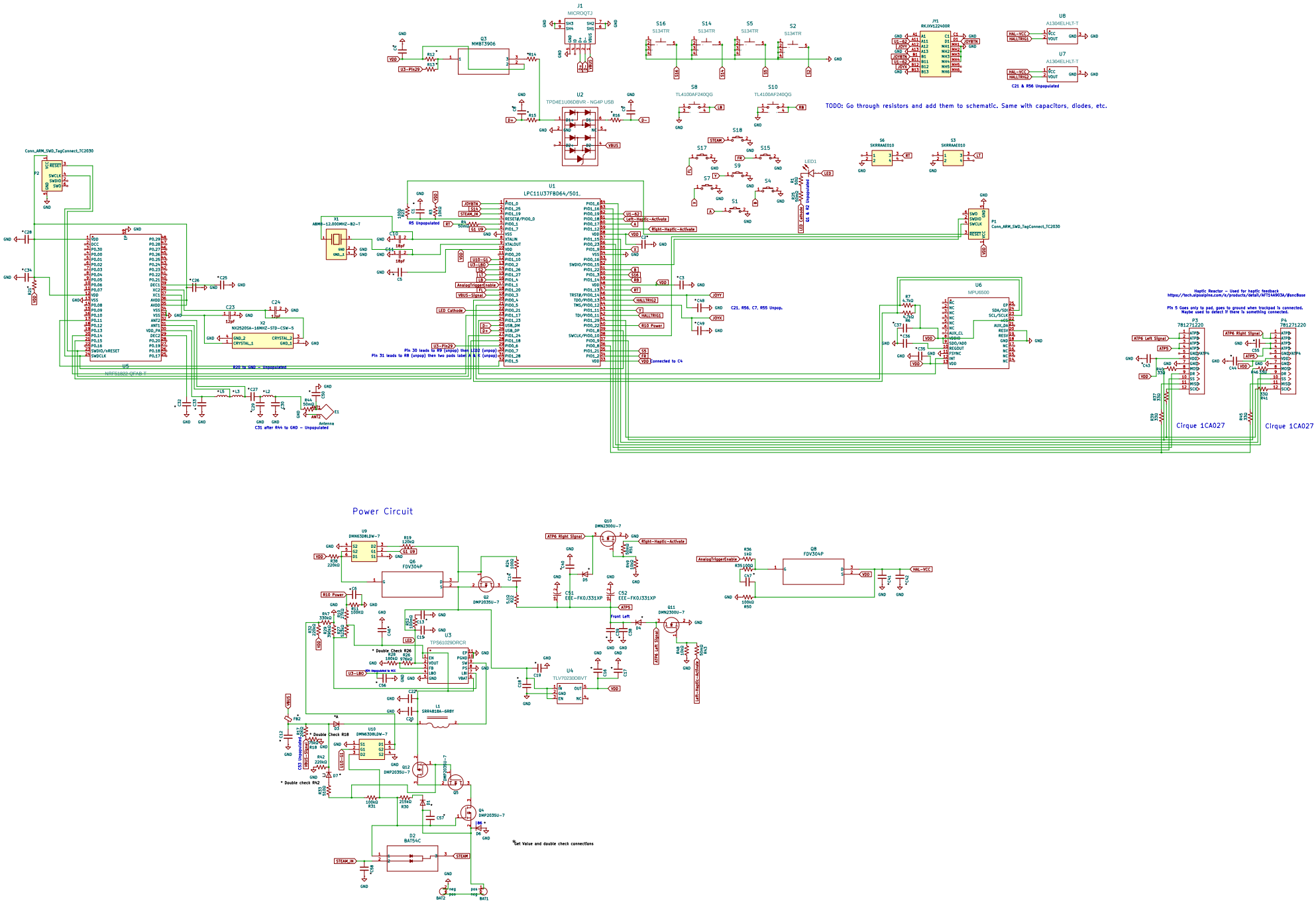
Power Circuit
TODO: Go through resistors and add them to schematic. Same with capacitors, diodes, etc.
C21, R56, C7, R55 Unpop.
Haptic Reactor - Used for haptic feedback
https://tech.alpsalpine.com/e/products/detail/AFT14M903A/@encBase
Pin 5 Goes only to pad, goes to ground when trackpad is connected.
Maybe used to detect if there is something connected.
Cirque 1CA027
Cirque 1CA027
Pin 30 leads to RB (unpop) then LED (unpop)
Pin 31 leads to RB (unpop) then two pads label A & E (unpop)
R20 to GND - Unpopulated
C31 after R44 to GND - Unpopulated
R5 Unpopulated
C21 & R56 Unpopulated
Connected to C4
Set Value and double check connections
Lambda_mainboard_EXP V0.87