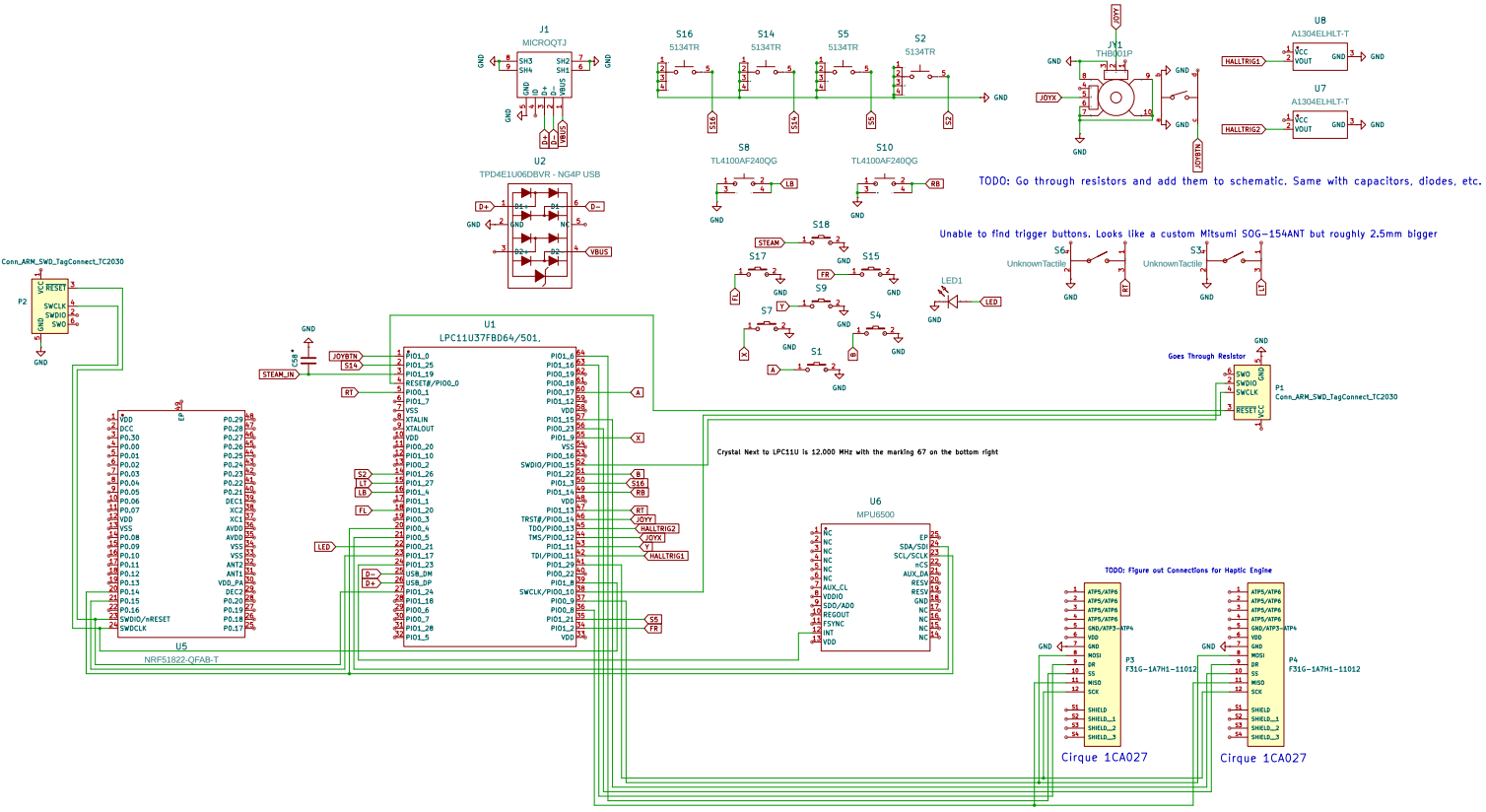

Power Circuit (Front Left Board)

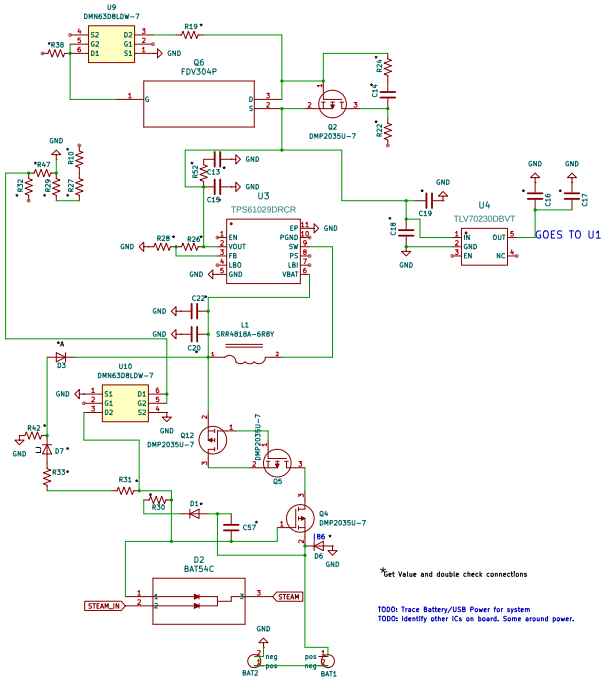

Lambda_mainboard_EXP V0.6