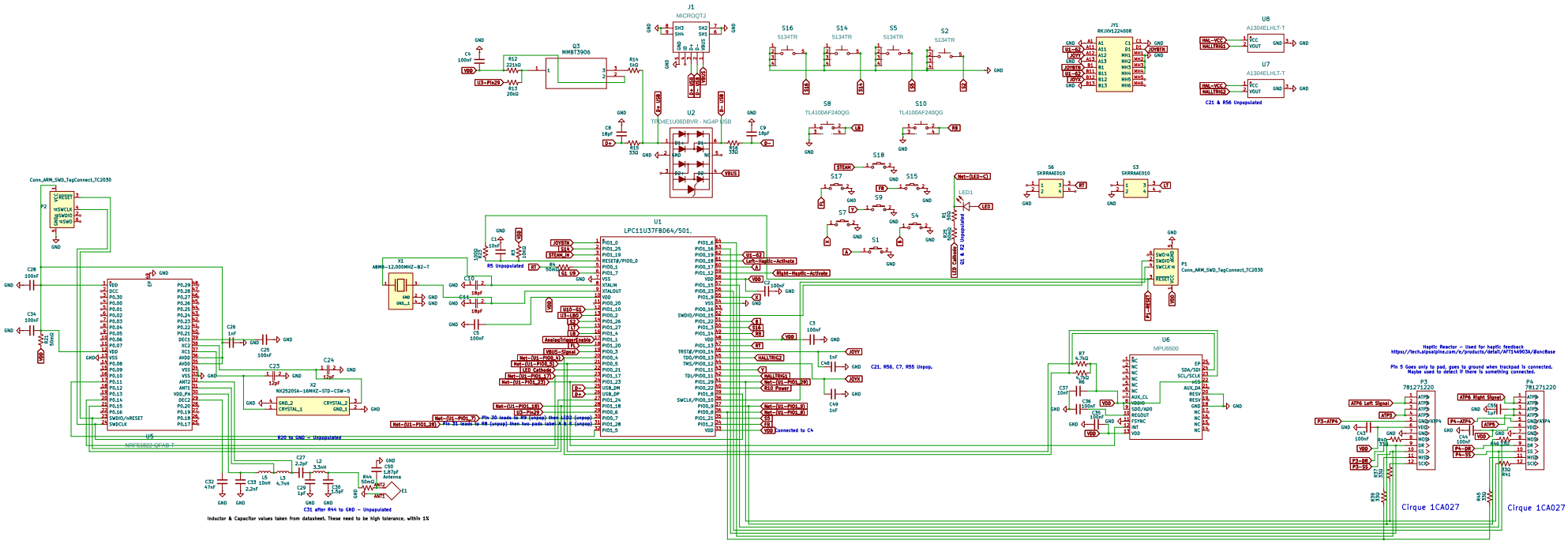

Lambda_mainboard_EXP V0.99