10-414/714 – Deep Learning Systems: Algorithms and Implementation

Automatic Differentiation

Fall 2023

J. Zico Kolter and Tianqi Chen (this time)
Carnegie Mellon University

Outline

General introduction to different differentiation methods

Reverse mode automatic differentiation

Outline

General introduction to different differentiation methods

Reverse mode automatic differentiation

How does differentiation fit into machine learning

1. The hypothesis class:

x

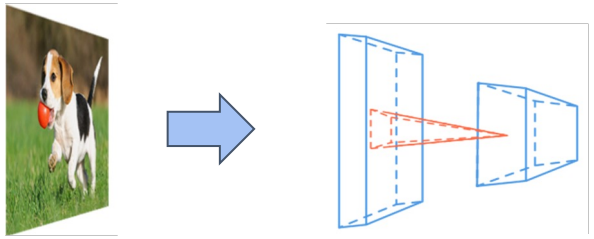

$h_\theta(x)$

2. The loss function:

$$l(h_\theta(x), y) = -h_y(x) + \log \sum_{j=1}^{k} \exp\left(h_j(x)\right)$$

3. An optimization method:

$$\theta := \theta - \frac{\alpha}{B} \sum_{i=1}^{B} \nabla_\theta \ell\left(h_\theta\left(x^{(i)}\right), y^{(i)}\right)$$

Recap: every machine learning algorithm consists of three different elements.
Computing the loss function gradient with respect to hypothesis class parameters is the most common operation in machine learning

Numerical differentiation

Directly compute the partial gradient by definition

$$\frac{\partial f(\theta)}{\partial \theta_i} = \lim_{\epsilon \to 0} \frac{f(\theta + \epsilon e_i) - f(\theta)}{\epsilon}$$

A more numerically accurate way to approximate the gradient

$$\frac{\partial f(\theta)}{\partial \theta_i} = \frac{f(\theta + \epsilon e_i) - f(\theta - \epsilon e_i)}{2\epsilon} + o(\epsilon^2)$$

Suffer from numerical error, less efficient to compute

Numerical gradient checking

However, numerical differentiation is a powerful tool to check an implement of an automatic differentiation algorithm in unit test cases

$$\delta^T \nabla_\theta f(\theta) = \frac{f(\theta + \epsilon\delta) - f(\theta - \epsilon\delta)}{2\epsilon} + o(\epsilon^2)$$

Pick δ from unit ball, check the above invariance.

Symbolic differentiation

Write down the formulas, derive the gradient by sum, product and chain rules

$$\frac{\partial(f(\theta)+g(\theta))}{\partial\theta} = \frac{\partial f(\theta)}{\partial\theta} + \frac{\partial g(\theta)}{\partial\theta} \qquad \frac{\partial(f(\theta)g(\theta))}{\partial\theta} = \mathrm{g}(\theta)\frac{\partial f(\theta)}{\partial\theta} + \mathrm{f}(\theta)\frac{\partial g(\theta)}{\partial\theta} \qquad \frac{\partial f(g(\theta))}{\partial\theta} = \frac{\partial f(g(\theta))}{\partial g(\theta)}\frac{\partial g(\theta)}{\partial\theta}$$

Naively do so can result in wasted computations

Example: $f(\theta) = \prod_{i=1}^{n} \theta_i \qquad \frac{f(\theta)}{\partial\theta_k} = \prod_{j\neq k}^{n} \theta_j$

Cost $n(n-2)$ multiplies to compute all partial gradients

Computational graph

$$y = f(x_1, x_2) = \ln(x_1) + x_1 x_2 - \sin x_2$$

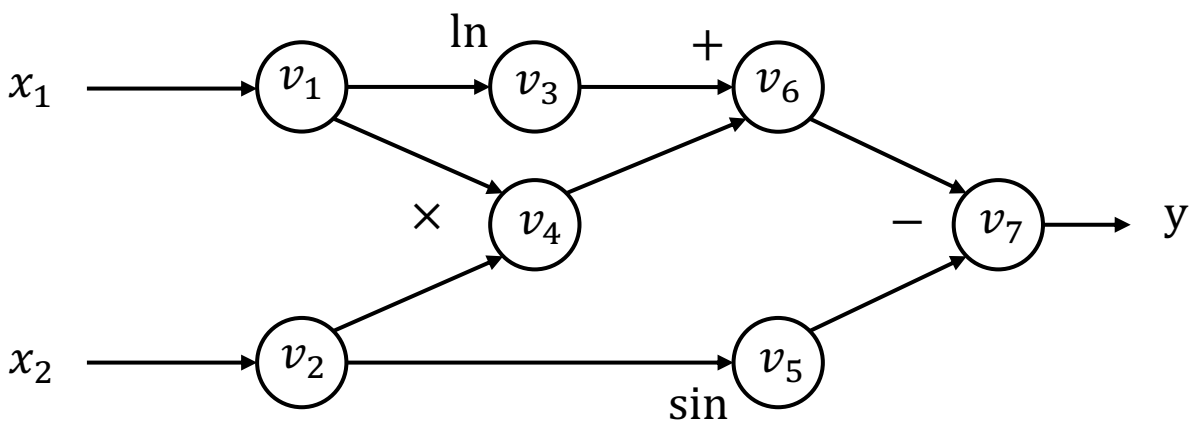

Each node represent an (intermediate) value in the computation. Edges present input output relations.

Forward evaluation trace

$$v_1 = x_1 = 2$$
$$v_2 = x_2 = 5$$
$$v_3 = \ln v_1 = \ln 2 = 0.693$$
$$v_4 = v_1 \times v_2 = 10$$
$$v_5 = \sin v_2 = \sin 5 = -0.959$$
$$v_6 = v_3 + v_4 = 10.693$$
$$v_7 = v_6 - v_5 = 10.693 + 0.959 = 11.652$$
$$y = v_7 = 11.652$$

Example based on A. G. Baydin, B. A. Pearlmutter, A. A. Radul, and J. M. Siskind. Automatic differentiation in machine learning: a survey. JMLR

Forward mode automatic differentiation (AD)

$$y = f(x_1, x_2) = \ln(x_1) + x_1 x_2 - \sin x_2$$

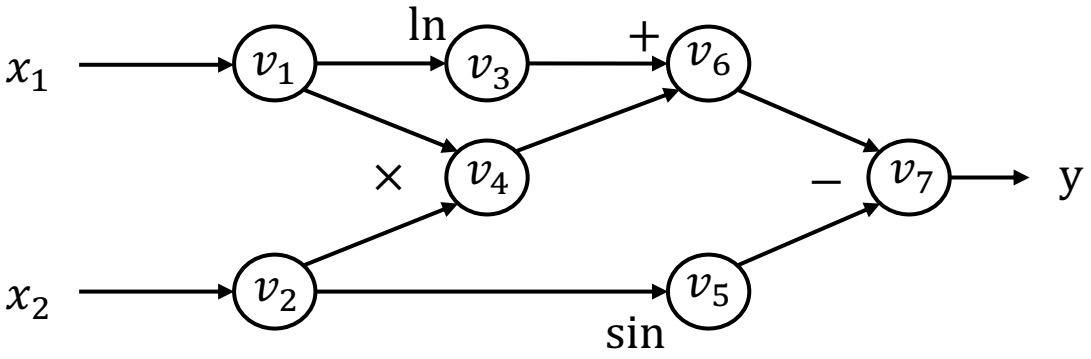

Define $\dot{v}_i = \frac{\partial v_i}{\partial x_1}$

We can then compute the $\dot{v}_i$ iteratively in the forward topological order of the computational graph

Forward evaluation trace

$$v_1 = x_1 = 2$$
$$v_2 = x_2 = 5$$
$$v_3 = \ln v_1 = \ln 2 = 0.693$$
$$v_4 = v_1 \times v_2 = 10$$
$$v_5 = \sin v_2 = \sin 5 = -0.959$$
$$v_6 = v_3 + v_4 = 10.693$$
$$v_7 = v_6 - v_5 = 10.693 + 0.959 = 11.652$$
$$y = v_7 = 11.652$$

Forward AD trace

$$\dot{v}_1 = 1$$
$$\dot{v}_2 = 0$$
$$\dot{v}_3 = \dot{v}_1 / v_1 = 0.5$$
$$\dot{v}_4 = \dot{v}_1 v_2 + \dot{v}_2 v_1 = 1 \times 5 + 0 \times 2 = 5$$
$$\dot{v}_5 = \dot{v}_2 \cos v_2 = 0 \times \cos 5 = 0$$
$$\dot{v}_6 = \dot{v}_3 + \dot{v}_4 = 0.5 + 5 = 5.5$$
$$\dot{v}_7 = \dot{v}_6 - \dot{v}_5 = 5.5 - 0 = 5.5$$

Now we have $\frac{\partial y}{\partial x_1} = \dot{v}_7 = 5.5$

Limitation of forward mode AD

For $f: \mathbb{R}^n \to \mathbb{R}^k$, we need n forward AD passes to get the gradient with respect to each input.

We mostly care about the cases where $k = 1$ and large n .

In order to resolve the problem efficiently, we need to use another kind of AD.

Outline

General introduction to different differentiation methods

Reverse mode automatic differentiation

Reverse mode automatic differentiation(AD)

$$y = f(x_1, x_2) = \ln(x_1) + x_1 x_2 - \sin x_2$$

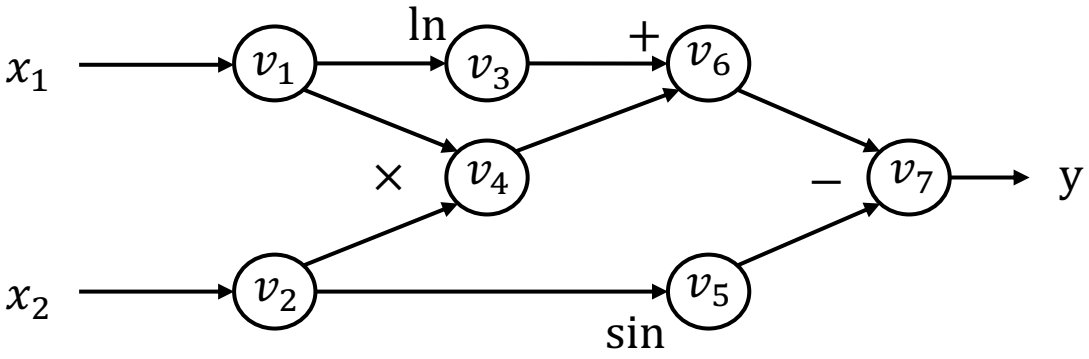

Forward evaluation trace

$$v_1 = x_1 = 2$$
$$v_2 = x_2 = 5$$
$$v_3 = \ln v_1 = \ln 2 = 0.693$$
$$v_4 = v_1 \times v_2 = 10$$
$$v_5 = \sin v_2 = \sin 5 = -0.959$$
$$v_6 = v_3 + v_4 = 10.693$$
$$v_7 = v_6 - v_5 = 10.693 + 0.959 = 11.652$$
$$y = v_7 = 11.652$$

Define adjoint $\overline{v_i} = \frac{\partial y}{\partial v_i}$

We can then compute the $\overline{v_i}$ iteratively in the **reverse** topological order of the computational graph

Reverse AD evaluation trace

$$\overline{v_7} = \frac{\partial y}{\partial v_7} = 1$$
$$\overline{v_6} = \overline{v_7}\frac{\partial v_7}{\partial v_6} = \overline{v_7} \times 1 = 1$$
$$\overline{v_5} = \overline{v_7}\frac{\partial v_7}{\partial v_5} = \overline{v_7} \times (-1) = -1$$
$$\overline{v_4} = \overline{v_6}\frac{\partial v_6}{\partial v_4} = \overline{v_6} \times 1 = 1$$
$$\overline{v_3} = \overline{v_6}\frac{\partial v_6}{\partial v_3} = \overline{v_6} \times 1 = 1$$
$$\overline{v_2} = \overline{v_5}\frac{\partial v_5}{\partial v_2} + \overline{v_4}\frac{\partial v_4}{\partial v_2} = \overline{v_5} \times \cos v_2 + \overline{v_4} \times v_1 = -0.284 + 2 = 1.716$$
$$\overline{v_1} = \overline{v_4}\frac{\partial v_4}{\partial v_1} + \overline{v_3}\frac{\partial v_3}{\partial v_1} = \overline{v_4} \times v_2 + \overline{v_3}\frac{1}{v_1} = 5 + \frac{1}{2} = 5.5$$

Derivation for the multiple pathway case

v_1 is being used in multiple pathways (v_2 and v_3)

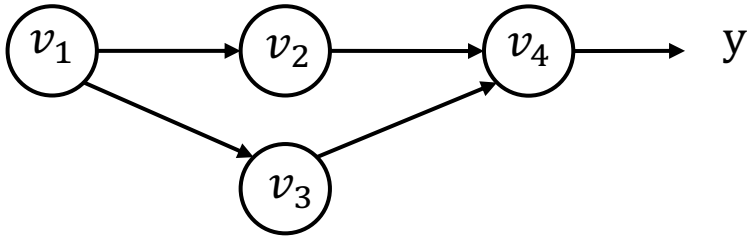

y can be written in the form of $\mathrm{y} = \mathrm{f}(\mathrm{v}_2, \mathrm{v}_3)$

$$\overline{v_1} = \frac{\partial y}{\partial v_1} = \frac{\partial f(v_2,v_3)}{\partial v_2}\frac{\partial v_2}{\partial v_1} + \frac{\partial f(v_2,v_3)}{\partial v_3}\frac{\partial v_3}{\partial v_1} = \overline{v_2}\frac{\partial v_2}{\partial v_1} + \overline{v_3}\frac{\partial v_3}{\partial v_1}$$

Define partial adjoint $\overline{v_{i\to j}} = \overline{v_j}\dfrac{\partial v_j}{\partial v_i}$ for each input output node pair i and j

$$\overline{v_i} = \sum_{j \in next(i)} \overline{v_{i\to j}}$$

We can compute partial adjoints separately then sum them together

Reverse AD algorithm

```
def gradient(out):
    node_to_grad = {out: [1]}

    for i in reverse_topo_order(out):
        v̄_i = Σ_j v̄_{i→j} = sum(node_to_grad[i])

        for k ∈ inputs(i):
            compute v̄_{k→i} = v̄_i ∂v_i/∂v_k
            append v̄_{k→i} to node_to_grad[k]

    return adjoint of input v̄_input
```

Dictionary that records a list of partial adjoints of each node

Sum up partial adjoints

"Propagates" partial adjoint to its input

Reverse mode AD by extending computational graph

```
def gradient(out):
  node_to_grad = {out:  [1]}
  for i in reverse_topo_order(out):
    v̄_i = Σ_j v̄_{i→j} = sum(node_to_grad[i])
    for k ∈ inputs(i):
        compute v̄_{k→i} = v̄_i ∂v_i/∂v_k
        append v̄_{k→i} to node_to_grad[k]
    return adjoint of input v̄_input
```

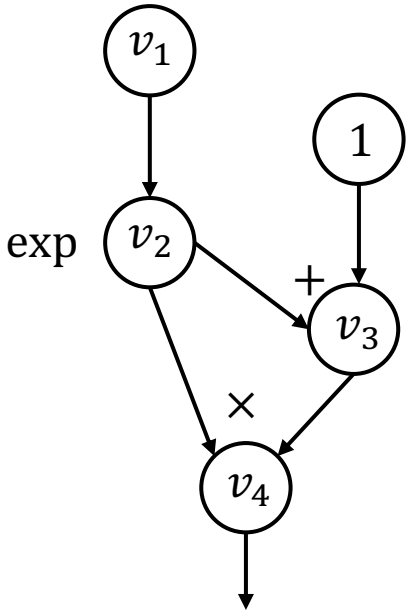

Our previous examples compute adjoint values directly by hand.
How can we construct a computational graph that calculates the adjoint values?

Reverse mode AD by extending computational graph

```
def gradient(out):
  node_to_grad = {out:  [1]}
  for i in reverse_topo_order(out):
    v̄_i = Σ_j v̄_{i→j} = sum(node_to_grad[i])
    for k ∈ inputs(i):
        compute v̄_{k→i} = v̄_i ∂v_i/∂v_k
        append v̄_{k→i} to node_to_grad[k]
    return adjoint of input v̄_input
```

$i = 4$

```
node_to_grad: {
  4: [v̄_4]
}
```

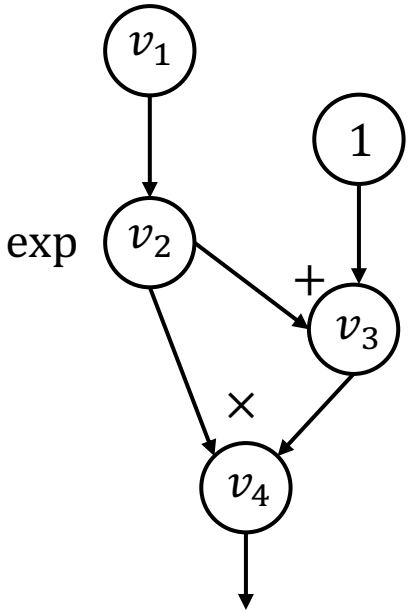

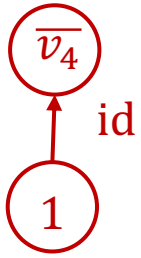

NOTE: id is identity function

Reverse mode AD by extending computational graph

```
def gradient(out):
  node_to_grad = {out:  [1]}
  for i in reverse_topo_order(out):
    v̄_i = Σ_j v̄_{i→j} = sum(node_to_grad[i])
    for k ∈ inputs(i):
        compute v̄_{k→i} = v̄_i ∂v_i/∂v_k
        append v̄_{k→i} to node_to_grad[k]
    return adjoint of input v̄_input
```

$i = 4$

```
node_to_grad: {
  2: [v̄_{2→4}]
  3: [v̄_3]
  4: [v̄_4]
}
```

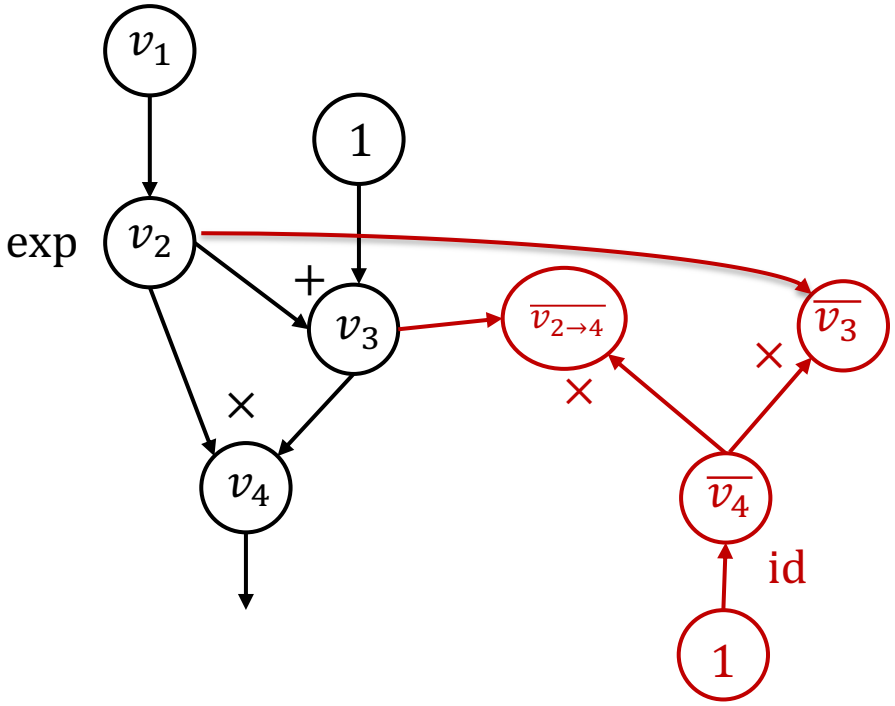

NOTE: id is identity function

Reverse mode AD by extending computational graph

```
def gradient(out):
  node_to_grad = {out:  [1]}
  for i in reverse_topo_order(out):
    v̄_i = Σ_j v̄_{i→j} = sum(node_to_grad[i])
    for k ∈ inputs(i):
        compute v̄_{k→i} = v̄_i ∂v_i/∂v_k
        append v̄_{k→i} to node_to_grad[k]
    return adjoint of input v̄_input
```

$i = 3$

node_to_grad: {

2: $[\overline{v_{2\to4}}, \overline{v_{2\to3}}]$

3: $[\overline{v_3}]$

4: $[\overline{v_4}]$

}

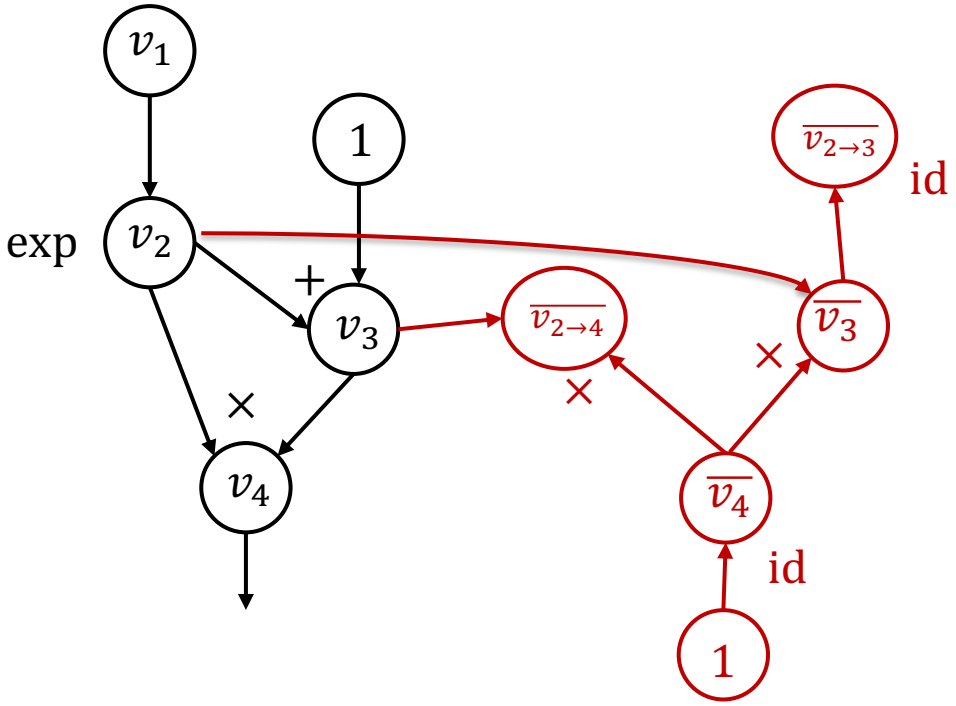

NOTE: id is identity function

Reverse mode AD by extending computational graph

```
def gradient(out):
  node_to_grad = {out:  [1]}
  for i in reverse_topo_order(out):
    v̄_i = Σ_j v̄_{i→j} = sum(node_to_grad[i])
    for k ∈ inputs(i):
        compute v̄_{k→i} = v̄_i ∂v_i/∂v_k
        append v̄_{k→i} to node_to_grad[k]
    return adjoint of input v̄_input
```

$i = 2$

```
node_to_grad: {
  2: [v̄_{2→4}, v̄_{2→3}]
  3: [v̄_3]
  4: [v̄_4]
}
```

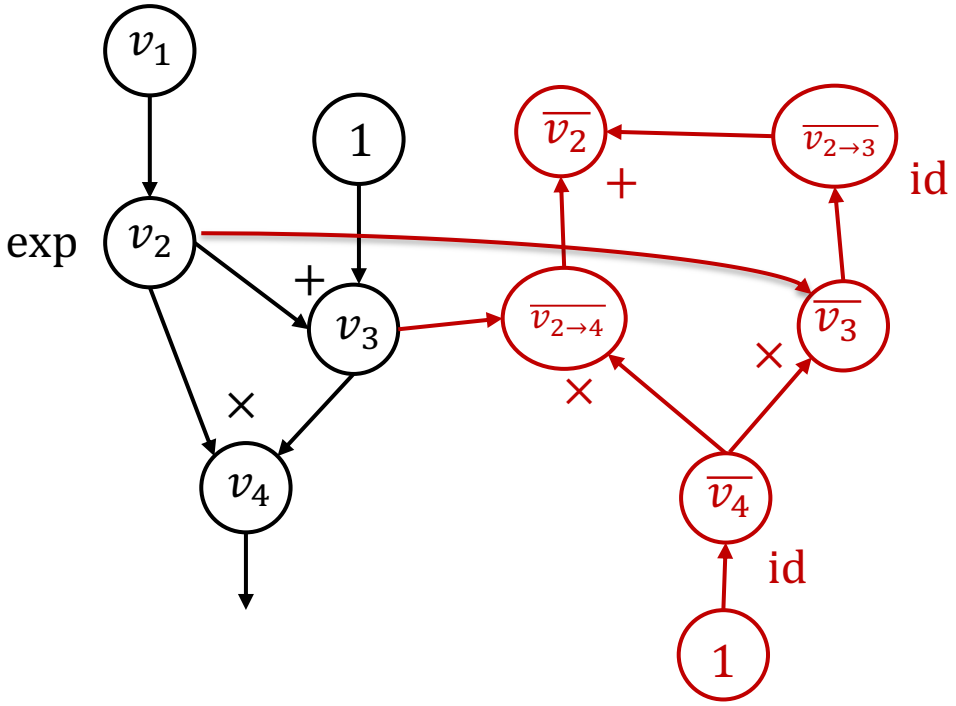

NOTE: id is identity function

Reverse mode AD by extending computational graph

```
def gradient(out):
  node_to_grad = {out:  [1]}
  for i in reverse_topo_order(out):
    v̄_i = Σ_j v̄_{i→j} = sum(node_to_grad[i])
    for k ∈ inputs(i):
        compute v̄_{k→i} = v̄_i ∂v_i/∂v_k
        append v̄_{k→i} to node_to_grad[k]
    return adjoint of input v̄_input
```

$i = 2$

```
node_to_grad: {
  1: [v̄_1]
  2: [v̄_{2→4}, v̄_{2→3}]
  3: [v̄_3]
  4: [v̄_4]
}
```

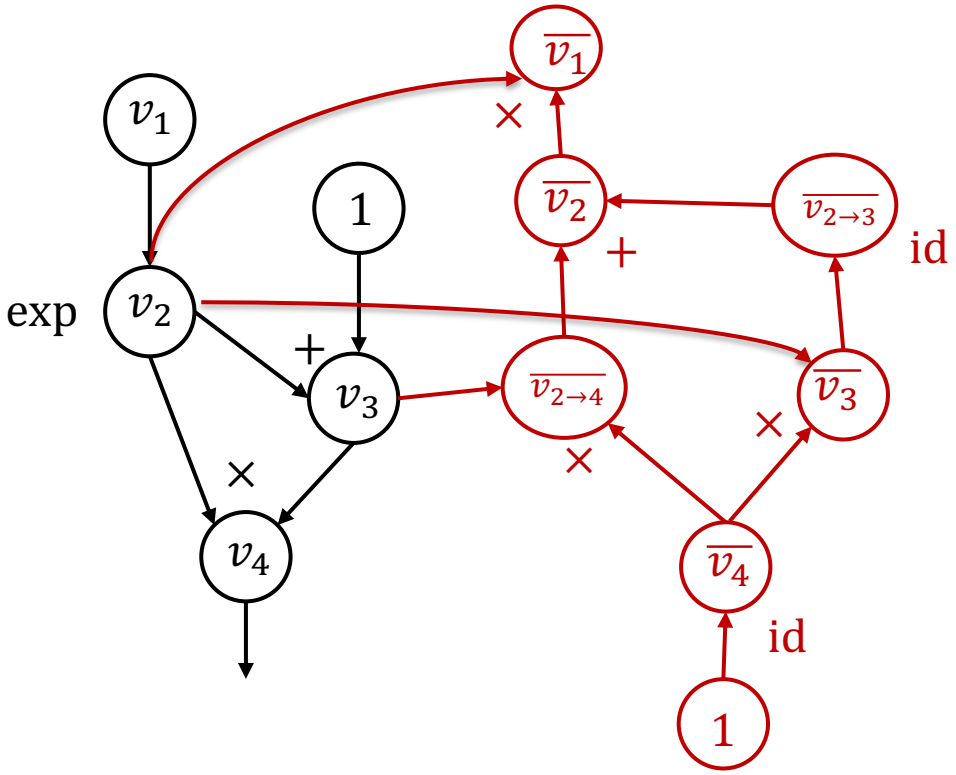

NOTE: id is identity function

Reverse mode AD vs Backprop

Backprop

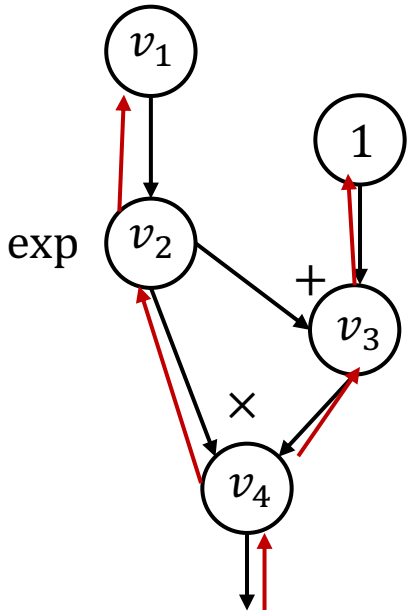

Reverse mode AD by extending computational graph

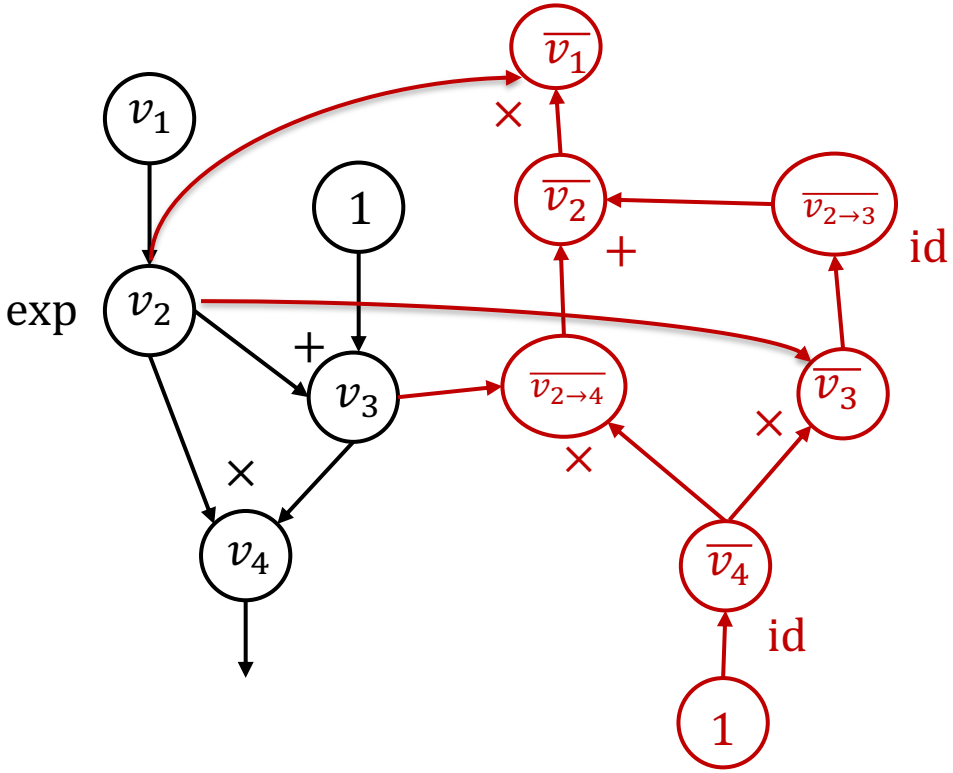

- Run backward operations the same forward graph
- Used in first generation deep learning frameworks (caffe, cuda-convnet)

- Construct separate graph nodes for adjoints
- Used by modern deep learning frameworks

Reverse mode AD on Tensors

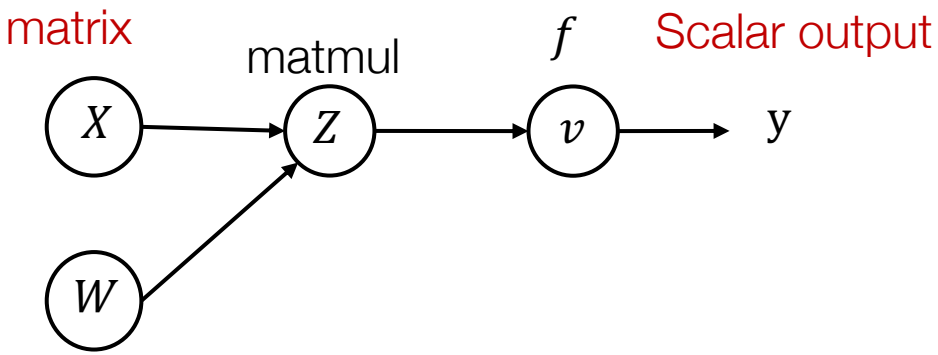

Define adjoint for tensor values $\bar{Z} = \begin{bmatrix} \frac{\partial y}{\partial Z_{1,1}} & \cdots & \frac{\partial y}{\partial Z_{1,n}} \\ \cdots & \cdots & \cdots \\ \frac{\partial y}{\partial Z_{m,1}} & \cdots & \frac{\partial y}{\partial Z_{m,n}} \end{bmatrix}$

Forward evaluation trace

$$Z_{ij} = \sum_k X_{ik} W_{kj}$$
$$v = f(Z)$$

Forward matrix form

$$Z = XW$$
$$v = f(Z)$$

Reverse evaluation in scalar form

$$\overline{X_{i,k}} = \sum_j \frac{\partial Z_{i,j}}{\partial X_{i,k}} \bar{Z}_{i,j} = \sum_j W_{k,j} \bar{Z}_{i,j}$$

Reverse matrix form

$$\bar{X} = \bar{Z} W^T$$

Discussions

What are the pros/cons of backprop and reverse mode AD

Handling gradient of gradient

The result of reverse mode AD is still a computational graph

We can extend that graph further by composing more operations and run reverse mode AD again on the gradient

Part of homework 1

Reverse mode AD on data structures

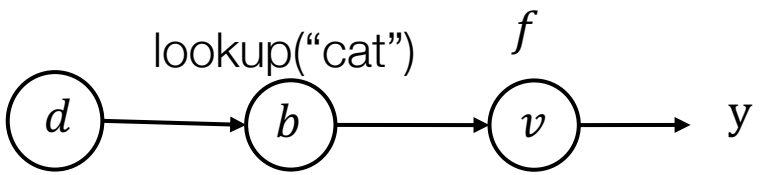

Define adjoint data structure

$\bar{d} = \{\text{“cat”}: \frac{\partial y}{\partial a_0}, \text{ “dog”}: \frac{\partial y}{\partial 1}\}$

Forward evaluation trace

d = {“cat”: a_0, “dog”: a_1}
$b = d$ [“cat”]
$v = f(b)$

Reverse evaluation

$\bar{b} = \frac{\partial v}{\partial b}\bar{v}$
$\bar{d} = \{\text{“cat”}: \bar{b}\ \}$

Key take away: Define “adjoint value” usually in the same data type as the forward value and adjoint propagation rule. Then the sample algorithm works.

Do not need to support the general form in our framework, but we may support “tuple values”