# Root [0]

**Technical Sheet Only!**
**Please refer to the subsequent sheets for schematic**

Power

File: power.kicad_sch

Sensor

File: Sensor.kicad_sch

Connectivity

File: connectivity.kicad_sch

System

File: System.kicad_sch

eFuse

File: efuse.kicad_sch

**Czech Technical University in Prague**

Sheet: /
File: VoxSense.kicad_sch

***Title: VoxSense Sensor Board – Root***

| | | |
|---|---|---|
| Size: A4 | Date: 2025-11-17 | **Rev: 1.0** |
| KiCad E.D.A. 9.0.6 | | Id: 0/6 |

# eFuse [1]

## Power Protection

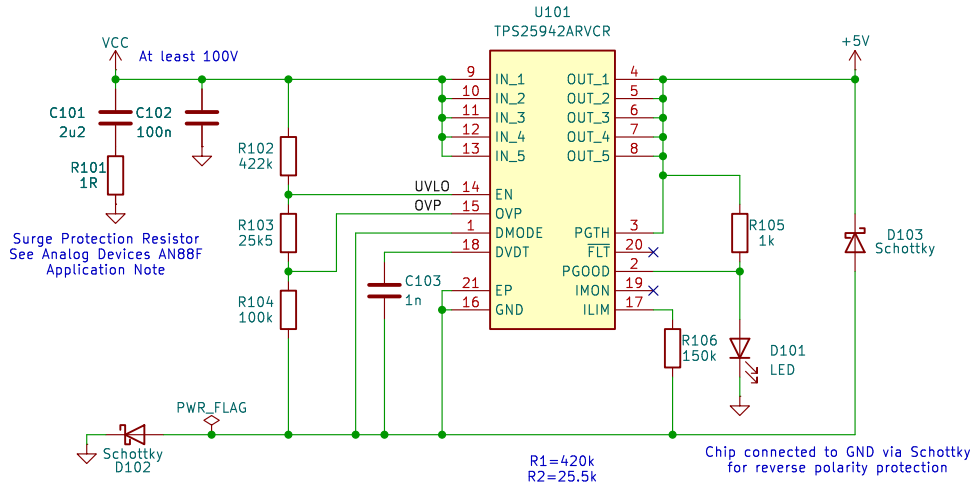


| PARAMETER | | TEST CONDITIONS | MIN | TYP | MAX | UNIT |
|---|---|---|---|---|---|---|
| $I_{LIM}$ | Current limit<br>$I_{LIM}$ for TPS25942[(2)]<br>$I_{FAULT}$ forTPS25944 [(2)(3)] | $R_{ILIM}$ = 150 kΩ, ($V_{IN}$ – $V_{OUT}$) = 1 V | 0.53 | 0.58 | 0.63 | A |
| | | $R_{ILIM}$ = 88.7 kΩ, ($V_{IN}$ – $V_{OUT}$) = 1 V | 0.9 | 0.99 | 1.07 | |
| | | $R_{ILIM}$ = 42.2 kΩ, ($V_{IN}$ – $V_{OUT}$) = 1 V | 1.92 | 2.08 | 2.25 | |
| | | $R_{ILIM}$ = 24.9 kΩ, ($V_{IN}$ – $V_{OUT}$) = 1 V | 3.25 | 3.53 | 3.81 | |
| | | $R_{ILIM}$ = 20 kΩ, ($V_{IN}$ – $V_{OUT}$) = 1 V | 4.09 | 4.45 | 4.81 | |
| | | $R_{ILIM}$ = 16.9 kΩ, ($V_{IN}$ – $V_{OUT}$) = 1 V | 4.78 | 5.2 | 5.62 | |
| | | $R_{ILIM}$ = OPEN, open resistor current limit (single point failure test: UL60950) | 0.35 | 0.45 | 0.55 | |
| | | $R_{ILIM}$ = SHORT, shorted resistor current limit (single point failure test: UL60950) | 0.55 | 0.67 | 0.8 | |
| | | OMODE = High; Non-ideal diode mode[(1)] | 0.5 × $I_{(LIM)}$ | | | |

R1=420k
R2=25.5k
R3=100k
UVLO_Rising = 4.3V
UVLO_Falling = 4V
OVP_Rising = 5.4V
OVP_Falling = 5.01V

0.99*(R1+R2+R3)=5.4*R3
(R2+R3)/R3 = 5.4/4.3
R3=100k

ILIM sets the current imit of the eFuse.
Datasheet specifies 450mA if I_lim is left open.
The largest tested value of ILIM is 150kOhm (580mA)

I_mon is only used for external sensing

**Czech Technical University in Prague**

Sheet: /eFuse/
File: efuse.kicad_sch

***Title: eFuse***

| | | |
|---|---|---|
| Size: A4 | Date: 2025-12-04 | **Rev: 1.0** |
| KiCad E.D.A. 9.0.6 | | Id: 1/6 |

# Power [2]

## Core Supply Voltage

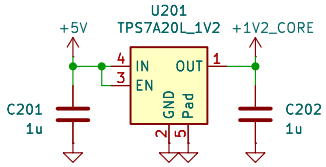


## NVCM Supply

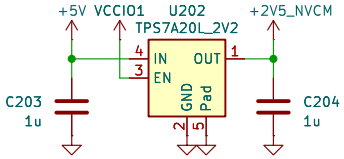


The NVCM regulator can be omitted and the VPP2V5 pin can be connected directly to 3V3 in order to save cost.

The pin can handle 3.6V.

A diode can be used to drop the voltage before by roughly 0.7V

## FPGA Power Delay

Note that $\overline{\text{CRESET}}$ is active LOW, meaning the FPGA is active when $\overline{\text{CRESET}}$ is HIGH. This requires a $\overline{\text{RESET}}$ variant of the TLV840 chip which active LOW, meaning it is the correct reset logic.

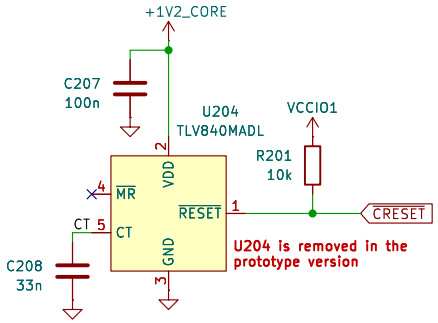


C [uF] = (T_delay [uS] − 80uS) / 618937
32nF = (20,000us − 80uS) / 618937

The FPGA wakes up after rougly 10us, however, the memory takes 150us to boot. We need to delay the FPGA startup, so that the flash memory is ready.

## FPGA Power Input

Keep close to the FPGA pads!

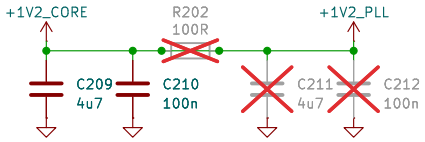


Due to tight BGA fanout, the 1V2_CORE and 1V2_PLL have to be connected together.

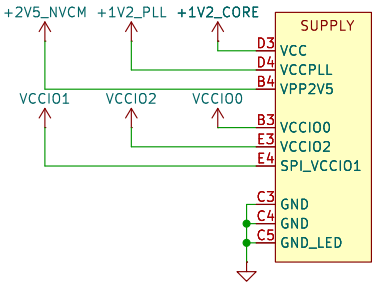


+2V5_NVCM

Keep close to the FPGA pads!

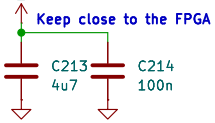


+3V3

Keep close to the FPGA pads!

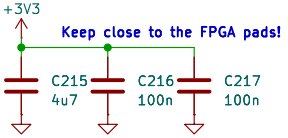


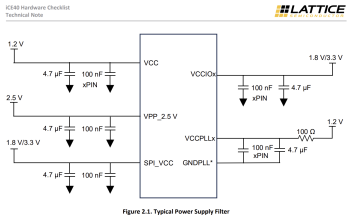


Filtering suggested by the manufacturer

## IO Supply

Multiple net names are used to indicate the I/O banks throughout the schematic

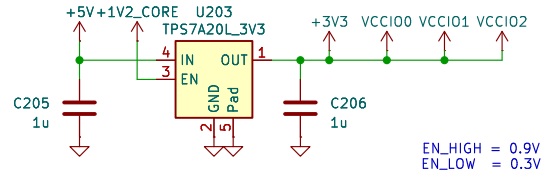


EN_HIGH = 0.9V
EN_LOW = 0.3V
EN_MAX = 6.5V

| | | |
|---|---|---|
| Czech Technical University in Prague | | |
| Sheet: /Power/ | | |
| File: power.kicad_sch | | |
| **Title: Power** | | |
| Size: A4 | Date: 2025-11-09 | Rev: 1.0 |
| KiCad E.D.A. 9.0.6 | | Id: 2/6 |

# System [3]

NEXT REVISION:
There is an imbalance of 22R resistors!
No resistors on the CDONE and CRESET

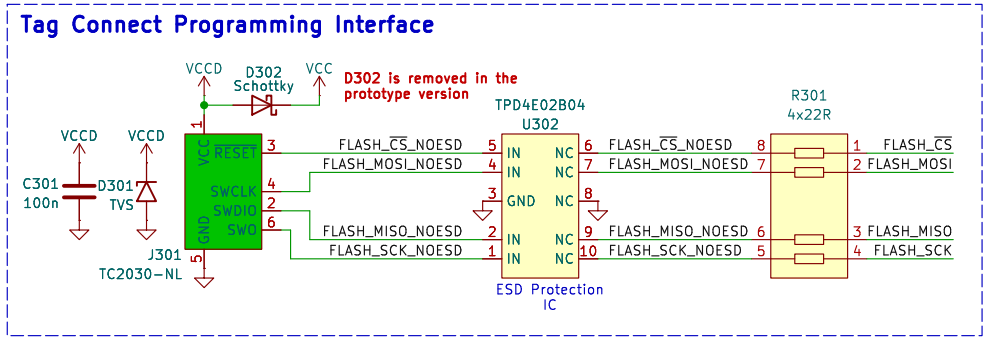


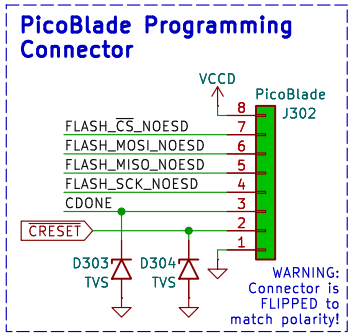


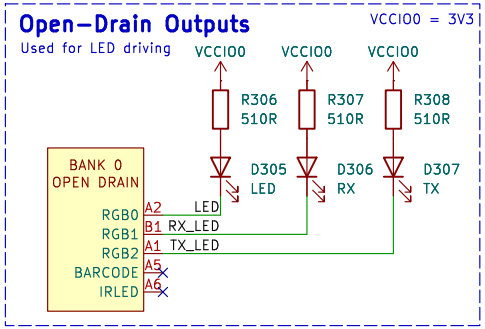


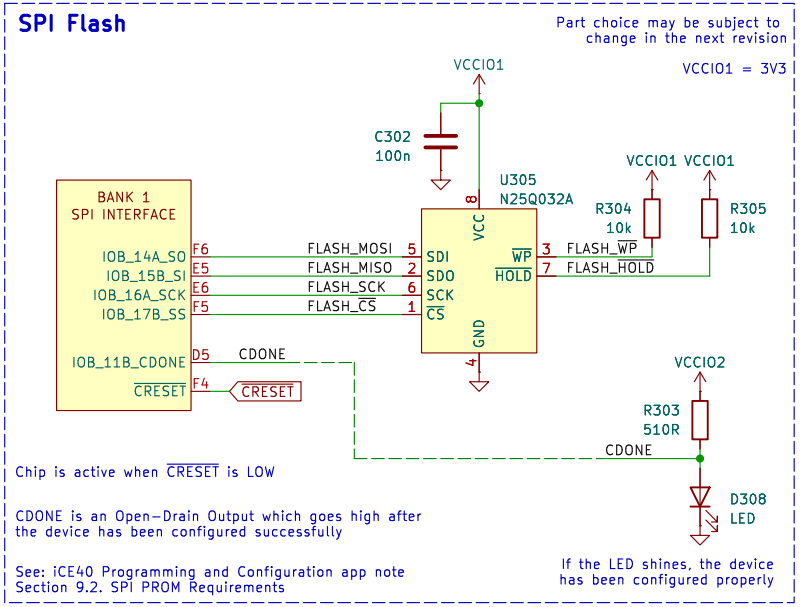


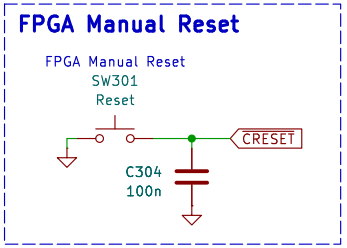


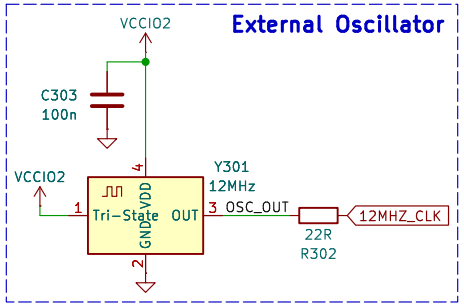


Czech Technical University in Prague

Sheet: /System/
File: System.kicad_sch

**Title: System**

| | | |
|---|---|---|
| Size: A4 | Date: 2025-11-17 | Rev: 1.0 |
| KiCad E.D.A. 9.0.6 | | Id: 3/6 |

# Sensor [4]

## I2C Interface

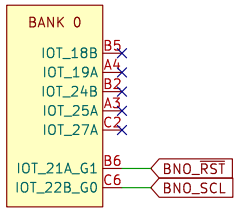


## BNO086

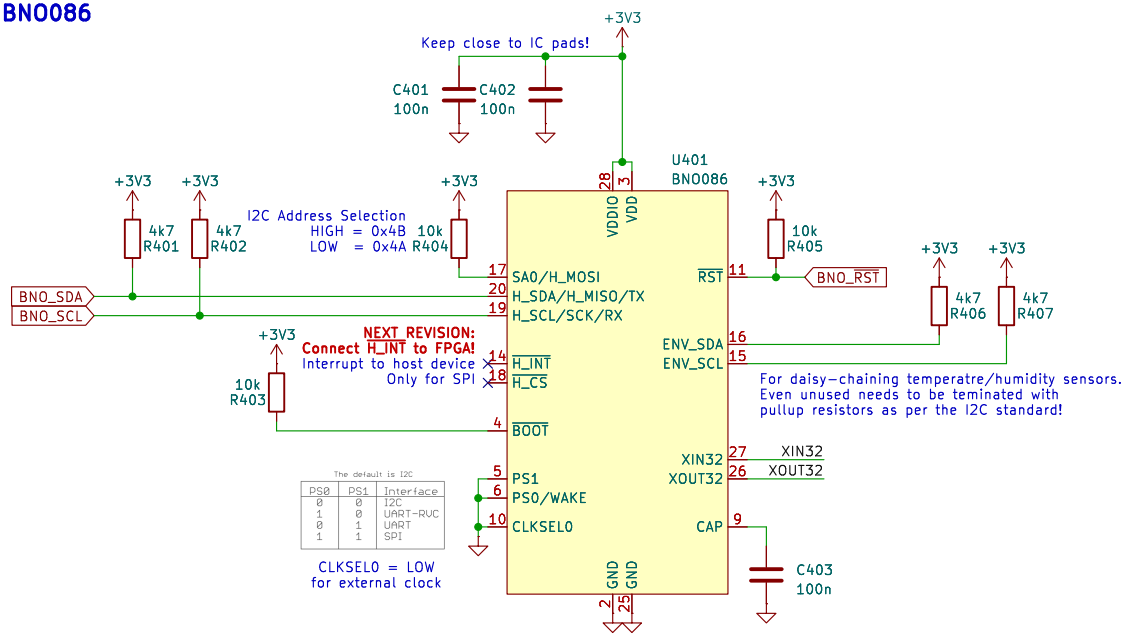


The default is I2C

| PS0 | PS1 | Interface |
|---|---|---|
| 0 | 0 | I2C |
| 1 | 0 | UART-RVC |
| 0 | 1 | UART |
| 1 | 1 | SPI |

## BNO086 Crystal

CEVA recommends using a crystal with tolerance 50ppm with 12.5pF capacitor loading.

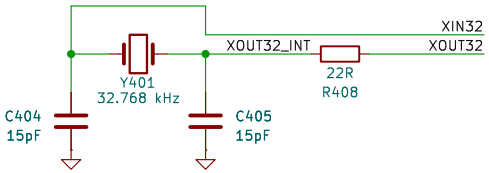


(12.5pF Load Capacitance − 5pF Stray Capacitance) * 2 = 15pF Load Capacitors


Czech Technical University in Prague
Sheet: /Sensor/
File: Sensor.kicad_sch
Title: Sensor
Size: A4 | Date: 2025-11-18 | Rev: 1.0
KiCad E.D.A. 9.0.6 | Id: 4/6

# Connectivity [5]

## VoxLink Ethernet Connection + Bus / Daisy Chain Switch

No Placement (NOP) – Used for the possibility of terminating the differential pairs to prevent reflections

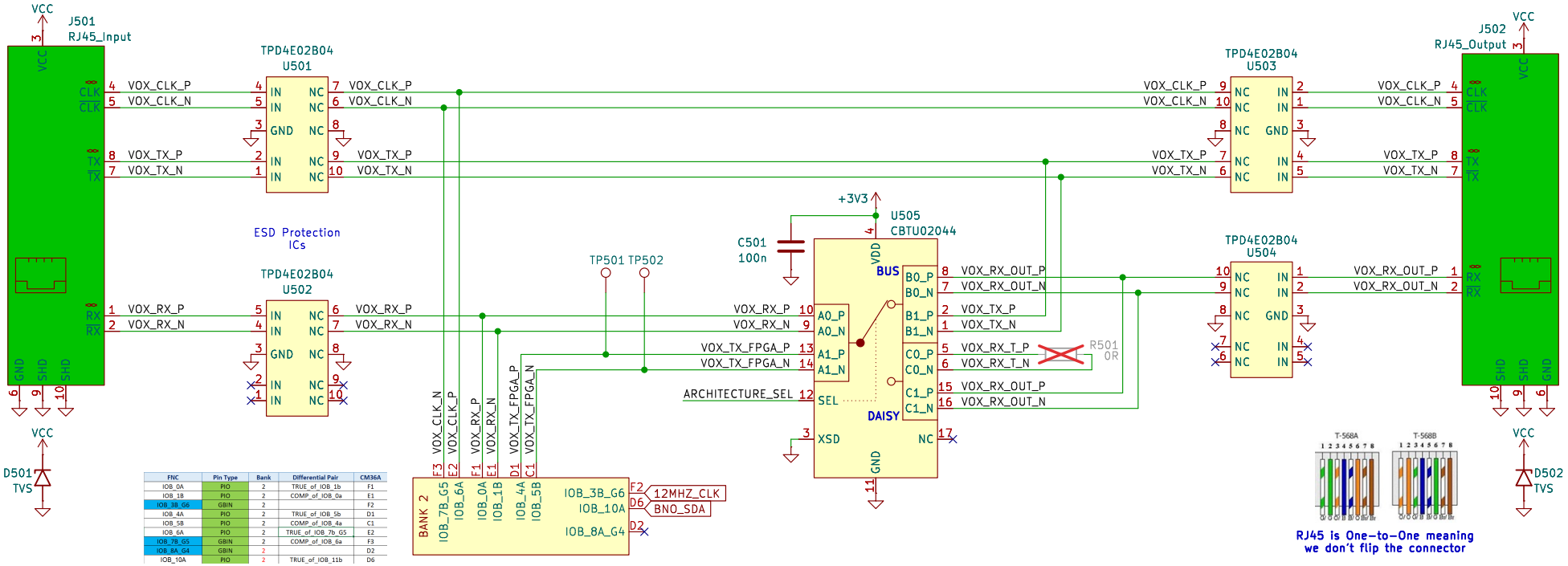


| FNC | Pin Type | Bank | Differential Pair | CM36A |
|---|---|---|---|---|
| IOB_0A | PIO | 2 | TRUE_of_IOB_1b | F1 |
| IOB_1B | PIO | 2 | COMP_of_IOB_0a | E1 |
| IOB_3B_G6 | GBIN | 2 | | F2 |
| IOB_4A | PIO | 2 | TRUE_of_IOB_5b | D1 |
| IOB_5B | PIO | 2 | COMP_of_IOB_4a | C1 |
| IOB_6A | PIO | 2 | TRUE_of_IOB_7b_G5 | E2 |
| IOB_7B_G5 | GBIN | 2 | COMP_of_IOB_6a | F3 |
| IOB_8A_G4 | GBIN | 2 | | D2 |
| IOB_10A | PIO | 2 | TRUE_of_IOB_11b | D6 |

Table of differential comparator pin pairs

## Architecture Selection

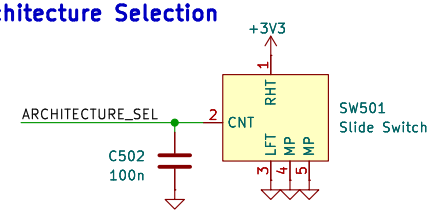


SEL = LOW –> A and B are conencted
SEL = HIGH –> A and C are conencted

## Termination Resistors

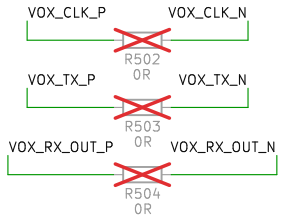


Czech Technical University in Prague
Sheet: /Connectivity/
File: connectivity.kicad_sch

**Title: Connectivity**

| | | |
|---|---|---|
| Size: A4 | Date: 2025-12-21 | Rev: 1.0 |
| KiCad E.D.A. 9.0.6 | | Id: 5/6 |