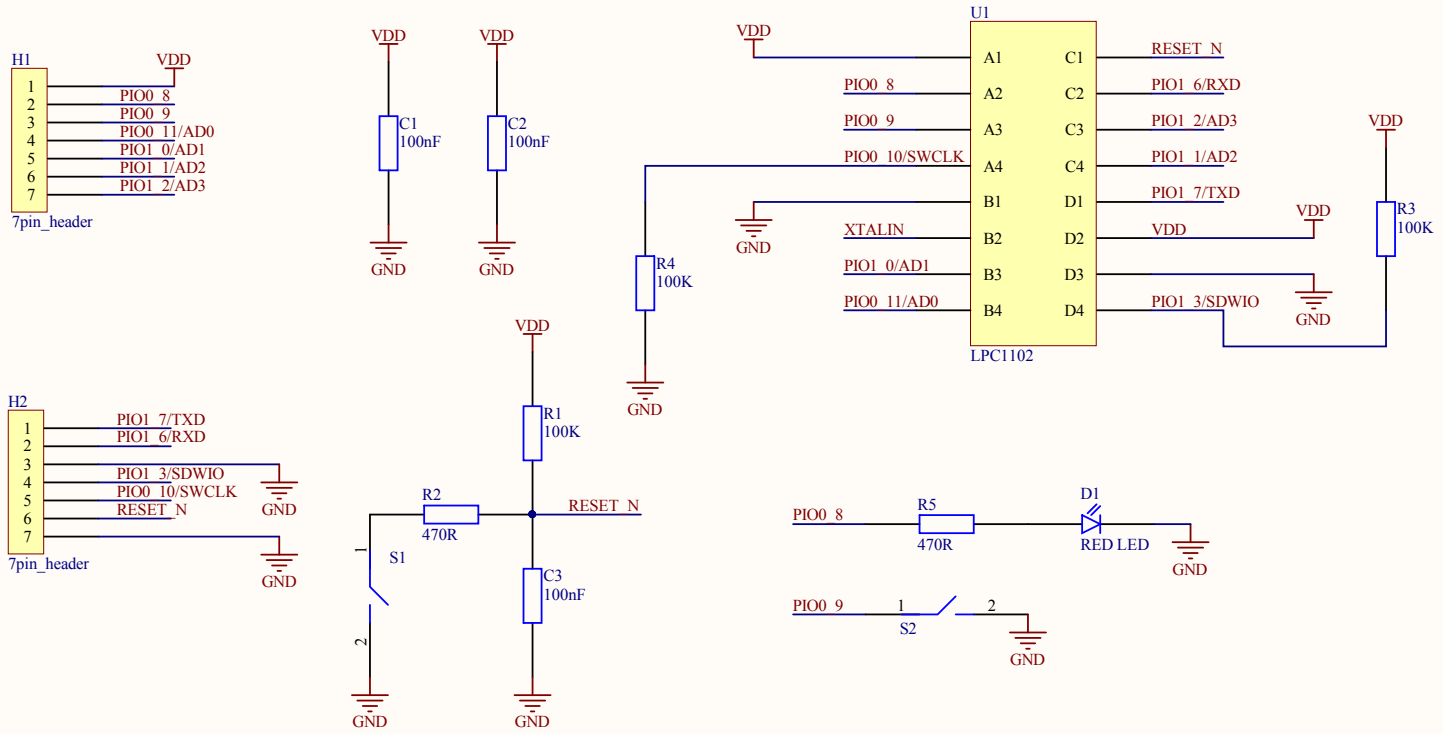

Title	YoctoBob	
Size A4	Number	Revision 1.0.0
Date: 5/18/2015		Sheet of
File: C:\Users\..\YoctoBob_LPC1102.SchDoc		Drawn By: