Lightweight LiDAR Mid-Fusion for Panoptic Segmentation in Adverse Conditions

Michele Cazzola
michele.cazzola.mc@gmail.com

Abstract

Robust scene understanding in adverse weather or illumination conditions remains a critical challenge for autonomous driving, as standard RGB-based perception systems often fail under degraded visual signals such as nighttime or heavy rainfall. We propose an efficient mid-fusion strategy that integrates LiDAR geometric cues into a transformer-based architecture through a lightweight gated residual modulation block. Our approach specifically addresses the balance between absolute performance and architectural complexity, targeting the practical constraints of real-world deployment. Evaluation on the MUSES dataset demonstrates that the proposed mechanism yields a 3.3% PQ improvement over the Mask2Former baseline, reaching a 7.0% gain in nighttime scenarios. Notably, these improvements are achieved with an overhead of just 6 M parameters and 13 ms of additional latency, maintaining a total inference time of 198 ms on a Tesla T4 GPU. Our findings suggest that meaningful robustness can be recovered with a compact architectural footprint, offering a viable direction for efficient multi-sensor perception.

1. Introduction

Robust perception is a cornerstone of autonomous driving, yet achieving reliable scene understanding remains a significant challenge in adverse environmental conditions. Standard vision-based systems often struggle when faced with degraded visual signals, such as those encountered in nighttime, fog, or heavy rain [25, 26]. In these scenarios, the inherent limitations of RGB sensors, namely their sensitivity to illumination and atmospheric scattering, can lead to performance degradation in critical tasks like panoptic segmentation [14].

To address these vulnerabilities, recent research has pivoted towards multimodal perception, integrating complementary signals from diverse sensors to enhance appearance-based features. By leveraging the redundancy provided by heterogeneous modalities, these systems have demonstrated significant robustness in tasks such as object detection and semantic segmentation [1, 10, 24]. While recent efforts have begun to apply these fusion strategies to the more comprehensive task of panoptic segmentation [18], a key design consideration for real-world deployment remains the balance between absolute performance and architectural complexity.

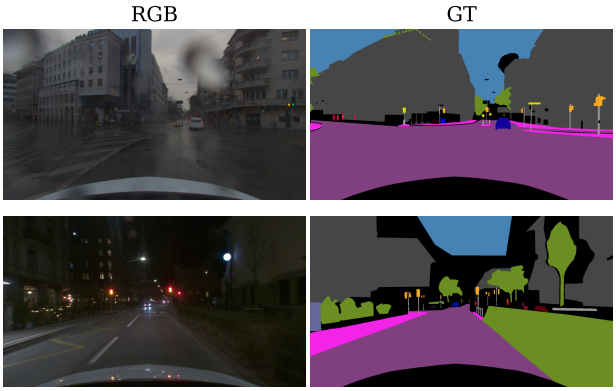

Figure 1. **Qualitative samples from the MUSES dataset**. RGB images in daytime rainfall (top) and nighttime (bottom) show severe signal degradation. The GT masks (right) illustrate the environmental complexity that requires geometric information for robust perception.

We evaluate the effectiveness of our work on the *MUlti-SEnsor Semantic perception* (MUSES) dataset [3], which provides a rigorous benchmark for robust perception by demanding architectures capable of handling extreme sensor degradation, as illustrated in Fig. 1. Recent state-of-the-art models developed for this task, such as CAFuser [5] and DGFusion [6], have demonstrated the potential of dynamic feature integration in achieving high panoptic quality. Within this context, we focus specifically on LiDAR integration, as evidence from the MUSES benchmark suggests it provides the most significant performance gains under adverse conditions [3]. Thus, we explore the potential of a modular integration strategy that enhances a transformer-based baseline while maintaining a streamlined computational profile.

In this paper, we propose a gated residual modulation mechanism designed to selectively incorporate LiDAR geometric features into the RGB-based feature extraction process. Our approach prioritizes efficiency, seeking to recover performance in degraded environments with a modest architectural footprint. Our primary contributions involve the introduction of an efficient gated fusion module specifically tailored for adverse weather, alongside a detailed analysis of the trade-off between perception robustness and computational cost. Furthermore, we evaluate our method on the MUSES benchmark, highlighting the specific benefits and limitations of lightweight geometric integration across various lighting and atmospheric noise scenarios.

2. Related Work

Panoptic Segmentation. Panoptic segmentation unifies semantic and instance segmentation by assigning unique class labels and instance IDs to all pixels in an image [14]. Recent advances have transitioned from dual-branch architectures to unified query-based frameworks, such as Mask2Former [7], OneFormer [11], and MaskDINO [15], that treat the task as a mask classification problem. Although such architectures achieve exceptional results on standard datasets [8, 17], they are primarily optimized for clear-weather camera inputs. In adverse conditions, such as those featured in the MUSES dataset [3], the reliability of visual features is often compromised. This requires the integration of complementary sensors to maintain robust performance.

Multimodal Fusion. Integrating LiDAR or depth data with RGB features is a well-established strategy to enhance perception robustness [16, 27]. Many prominent multimodal architectures rely on a dual-stream design [24, 29], employing a dedicated backbone for each modality to extract features, and thus significantly increasing the total parameter count of the system. Feature-wise Linear Modulation (FiLM) provides a more efficient alternative for cross-modal conditioning, since it applies affine transformations to the feature maps of the primary modality [23]. Our approach builds upon this concept by introducing a gated residual modulation, which allows for deep interaction between modalities without the redundancy of multiple backbone architectures.

Robustness in Adverse Weather. Dense perception in challenging environments requires models to handle non-stationary sensory degradations. These environments include conditions such as fog, heavy rain, or nighttime visibility. Recent methods such as CAFuser [5] and DGFusion [6] employ sophisticated condition-aware strategies to dynamically balance modal contributions, and demonstrate high levels of robustness by utilising comprehensive architectural designs.

Our methodology aligns with these precedents but prioritizes parameter efficiency. This approach modulates the hierarchical stages of a Swin-Transformer backbone [19], applying a gated integration that enables the model to recover structural information from LiDAR data while maintaining a lightweight profile. Such a strategy is particularly relevant for real-time applications where computational constraints are a primary concern.

3. Method

The proposed method introduces a multimodal fusion scheme that integrates the rich visual semantics of Mask2Former with the geometric information provided by LiDAR data. As illustrated in Fig. 2, the native Mask2Former architecture (shown in orange) consists of three main components: a hierarchical backbone that extracts image features, a pixel decoder that refines multi-scale representations, and a transformer decoder that updates a set of randomly initialized queries using the multi-scale feature maps. The transformer decoder produces pixel-wise mask predictions and class labels, which are then used to generate the final panoptic segmentation.

To incorporate geometric cues, we introduce an additional lightweight encoder that processes the LiDAR input projected onto the RGB image plane. The LiDAR signal is represented as a projected sparse representation composed of distance, intensity, and height channels. A binary validity mask is concatenated to these components to provide explicit information on the presence of data. A multi-scale fusion module is then applied to enrich the hierarchical feature maps with geometric information derived from the LiDAR signal. To mitigate the inherent sparsity of the projected points, a morphological dilation operation is applied to the LiDAR channels prior to encoding.

In contrast to early fusion strategies that concatenate modality inputs at the input layer [28] and late fusion approaches that aggregate independent predictions [22], our method adopts a mid-fusion design. Modality-specific features are first extracted independently and subsequently fused at multiple scales before the transformer decoder stages.

To establish a baseline for our mid-fusion strategy, we also implement an early fusion variant. In this setup, the four LiDAR-derived channels (distance, intensity, height, and validity mask) are concatenated directly with the RGB input [28]. The first convolutional layer of the Swin-T backbone is modified to accept a 7-channel input, while the rest of the architecture follows the standard Mask2Former design. This provides a direct comparison between low-level feature concatenation and our proposed hierarchical modulation.

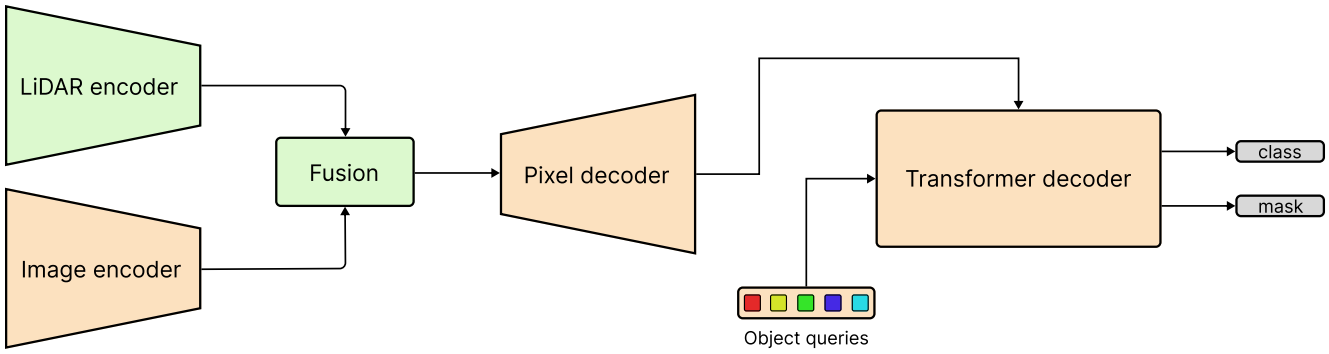

Figure 2. Overview of the proposed multimodal Mask2Former architecture. The image and LiDAR encoders generate multi-scale features with matching channels and resolutions at each level. These features are integrated within the fusion module before entering the pixel decoder. The transformer decoder refines a set of randomly initialized object queries using the fused representations to provide class and mask predictions. Modules inherited from the original Mask2Former are shown in orange, while those introduced in this work are highlighted in green.

3.1. Modality Encoders

The modality encoders extract multi-scale feature representations from the respective input sources. For the image modality, we adopt the Swin-T backbone of Mask2Former. This choice provides a favorable balance between accuracy and memory efficiency compared to larger variants of the same architecture.

The LiDAR encoder consists of four blocks, each comprising a 3×3 convolutional layer, batch normalization, and a ReLU activation. The encoder is designed to match the multi-scale structure of the Swin-T backbone. Specifically, the resulting feature maps are downsampled by factors of $1/4$, $1/8$, $1/16$, and $1/32$ with respect to the original input resolution, containing 96, 192, 384, and 768 channels, respectively.

3.2. Multimodal Fusion

The proposed mid-fusion strategy operates at multiple feature scales, with independent fusion modules applied to each pair of RGB and LiDAR feature maps. Since the goal of multimodal integration is to enrich the dominant camera modality with geometric cues, the LiDAR features are used to modulate the image-derived representations.

The fusion mechanism is inspired by Feature-wise Linear Modulation (FiLM) [23] and is composed of independent blocks whose architecture is shown in Fig. 3. At each resolution $k \in \{1, 2, 3, 4\}$, the RGB feature map $\boldsymbol{F}_{\text{RGB},k}$ is modulated using scale and shift parameters predicted from the corresponding LiDAR feature map $\boldsymbol{F}_{\text{LiDAR},k}$:

$$\boldsymbol{\gamma}_k = f(\boldsymbol{F}_{\text{LiDAR},k}), \qquad \boldsymbol{\beta}_k = h(\boldsymbol{F}_{\text{LiDAR},k}), \qquad (1)$$

where $f(\cdot)$ and $h(\cdot)$ are implemented as 1×1 convolutions. Unlike the original FiLM formulation, the modulation parameters are predicted spatially, resulting in tensors

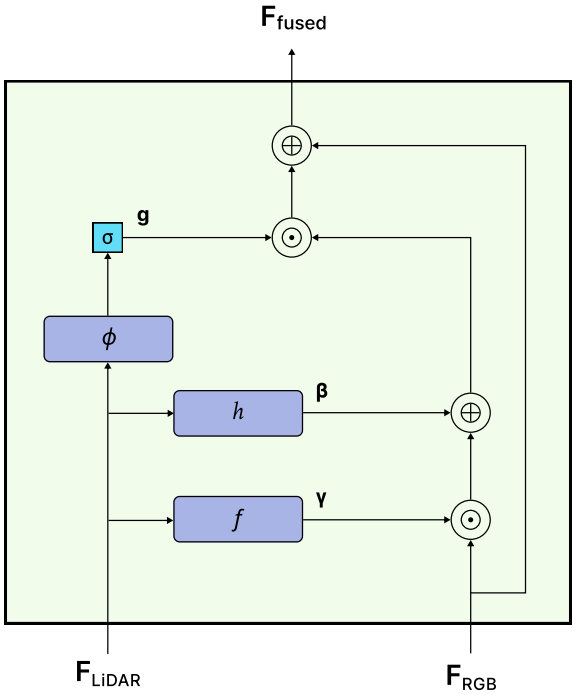

Figure 3. The feature modulation block at a given level k. Taking image ($\boldsymbol{F}_{\text{RGB},k}$) and LiDAR ($\boldsymbol{F}_{\text{LiDAR},k}$) features as input, the symbols $\boldsymbol{\gamma}_k$, $\boldsymbol{\beta}_k$, and $\boldsymbol{g}_k$ denote the scale, shift, and gating tensors, respectively. The functions f, h, and ϕ represent 1×1 convolutions, while σ indicates the sigmoid activation. The symbols $\oplus$ and $\odot$ indicate element-wise addition and the Hadamard product.

$\boldsymbol{\gamma}_k, \boldsymbol{\beta}_k \in \mathbb{R}^{C_k \times H_k \times W_k}$ that enable spatially-varying modulation. This design allows the LiDAR modality to influence image features locally, which is particularly beneficial when geometric cues vary across the scene.

To preserve the original image features and avoid disruptive transformations, the modulation is applied through

a residual connection. In addition, a gating mechanism is introduced to control the strength of the modulation. The gating tensor is computed as:

$$\boldsymbol{g}_k = \sigma(\phi(\boldsymbol{F}_{\text{LiDAR},k}))\,, \tag{2}$$

where $\phi(\cdot)$ denotes a 1×1 convolution and $\sigma(\cdot)$ is the sigmoid activation. The result is a tensor $\boldsymbol{g}_k \in \mathbb{R}^{C_k \times H_k \times W_k}$. The fused representation at resolution k is therefore given by:

$$\boldsymbol{F}_{\text{fused},k} = \boldsymbol{F}_{\text{RGB},k} + \boldsymbol{g}_k \odot (\boldsymbol{\gamma}_k \odot \boldsymbol{F}_{\text{RGB},k} + \boldsymbol{\beta}_k)\,, \tag{3}$$

where $\odot$ denotes the Hadamard product.

All convolutional layers in the fusion module are initialized with zero weights and biases. This initialization makes the module behave as an identity mapping at the beginning of training, ensuring stable optimization while allowing the network to progressively learn the modulation parameters.

3.3. Training Objective

The model is trained using the multi-task loss formulation of Mask2Former [7]. We adopt the original bipartite matching procedure and loss weights for both *things* and *stuff* categories to ensure a consistent optimization objective. Further details regarding the training schedule and hyperparameters are provided in Sec. 4.3.

4. Experiments

This section presents the experimental setup used to evaluate the proposed multimodal fusion approach. We first describe the dataset and evaluation metrics, then provide implementation details, and finally report quantitative results along with an ablation study assessing the contribution of the fusion module.

4.1. Datasets

We evaluate the proposed multimodal fusion architecture on the MUlti-SEnsor Semantic perception dataset (MUSES) [3]. MUSES comprises 2,500 driving scenes acquired under diverse weather conditions (clear, fog, rain, snow) and illumination settings (daytime and nighttime). Each scene includes a high-resolution (1920×1080) RGB image with dense annotations, along with synchronized data from multiple complementary sensors, namely LiDAR, radar, and event cameras. The dataset includes 19 semantic classes, following the Cityscapes taxonomy [8].

The multimodal nature of MUSES makes it particularly suitable for studying perception in adverse conditions, where purely vision-based methods may fail. In this work, we focus on panoptic segmentation, leveraging the geometric information provided by LiDAR to enhance the robustness of image-based predictions.

The dataset is split into training, validation, and test sets, containing 1,500, 250, and 750 samples, respectively. As the test annotations are not publicly available, all reported results are computed on the validation split, unless otherwise specified.

4.2. Evaluation Metrics

We evaluate the model using the Panoptic Quality (PQ) metric, following the standard implementation provided by the panopticAPI [13]. PQ jointly measures segmentation and recognition performance, and is defined as:

$$\text{PQ} = \underbrace{\frac{\sum_{(p,g)\in \text{TP}} \text{IoU}(p,g)}{|\text{TP}|}}_{\text{Segmentation Quality (SQ)}} \times \underbrace{\frac{|\text{TP}|}{|\text{TP}| + \frac{1}{2}|\text{FP}| + \frac{1}{2}|\text{FN}|}}_{\text{Recognition Quality (RQ)}}, \tag{4}$$

where (p, g) denotes matched pairs of predicted and ground-truth segments under the standard panoptic matching protocol. Segmentation Quality (SQ) corresponds to the average Intersection over Union (IoU) over matched segments, while Recognition Quality (RQ) is equivalent to the F_1 score [2]. TP, FP, and FN denote true positives, false positives, and false negatives, respectively [14].

4.3. Implementation Details

All experiments are conducted on a single NVIDIA Tesla T4 GPU with 15 GB of available memory. Due to hardware constraints, we use a batch size of 2 and resize the input images to a resolution of 1024×512. To maintain spatial alignment, the LiDAR projections and validity masks undergo the same transformation.

Both the baseline RGB-only model and the multimodal models are initialized from weights pretrained on Cityscapes [8] and fine-tuned for 15 epochs. Training is performed end-to-end, without freezing any component.

The models are optimized using AdamW [20], with a cosine annealing learning rate schedule [21]. For the mid fusion approach, we adopt different optimization settings for the pretrained and newly introduced components. In particular, the pretrained Mask2Former modules are fine-tuned with a learning rate of 1×10^{-5} and a weight decay of 0.01, while the LiDAR encoder and the fusion module are trained with a learning rate of 5×10^{-4} and a weight decay of 0.001. The early fusion model is trained analogously, with a learning rate of 1×10^{-5} and a weight decay of 0.001 for the patch embedding layer of the Swin-T backbone, while the rest of the architecture follows the same schedule of the mid fusion approach. The RGB-only model is trained using a learning rate of 5×10^{-5} and a weight decay of 0.01.

4.4. Results

Main results. The quantitative comparison between the RGB-only baseline and the proposed multimodal model is

Table 1. **Main results on the MUSES validation set.** The modalities include camera (C) and LiDAR (L). $\mathrm{PQ}_{\mathrm{th}}$ and $\mathrm{PQ}_{\mathrm{st}}$ denote panoptic quality for things and stuff, respectively. GFLOPs and latency are measured on a single NVIDIA Tesla T4 GPU with a batch size of 1 and a resolution of 1024×512. In **bold** the highest value for each PQ metric.

Model	Modalities	GFLOPs	Params (M)	Latency (ms)	$\mathrm{PQ}_{\mathrm{th}}$ (%)	$\mathrm{PQ}_{\mathrm{st}}$ (%)	PQ (%)
Mask2Former [7]	C	136	47	185	35.0	57.6	48.1
Early fusion	CL	137	47	186	36.0	57.9	48.7
Mid fusion (Ours)	CL	144	53	198	**39.2**	**60.2**	**51.4**

Table 2. **Performance comparison on the MUSES test set.** The modalities include Camera (C), LiDAR (L), Radar (R), and Events (E). $\mathrm{PQ}_{\mathrm{th}}$ and $\mathrm{PQ}_{\mathrm{st}}$ denote panoptic quality for things and stuff, respectively. *: based on the training schedule and setup presented in [3]. ‡: quadrimodal model based on 4 parallel Swin-T backbones. †: estimated quantity, based on the backbone-head configuration described in the respective papers and the modifications for evaluation on the MUSES benchmark provided in [6]. Except for HRFuser, all models utilize a Swin-T backbone. In **bold** the best absolute performance for each metric. Our mid fusion approach outperforms models with comparable parameter counts

Model	Modalities	Params (M)	$\mathrm{PQ}_{\mathrm{th}}$ (%)	$\mathrm{PQ}_{\mathrm{st}}$ (%)	PQ (%)
Mask2Former* [7]	C	47	31.3	58.2	46.9
MaskDINO [15]	C	$\sim$55†	38.6	57.3	49.4
HRFuser [4]	CLRE	$\sim$50†	28.3	55.2	43.9
MUSES‡ [3]	CLRE	$\sim$130†	39.9	63.5	53.6
CAFuser [5]	CLRE	77	48.4	67.9	59.7
DGFusion [6]	CLRE	79	**49.7**	**69.3**	**61.0**
Mid fusion (Ours)	CL	53	39.0	60.8	51.7

reported in Tab. 1. Early fusion provides only a marginal benefit (+0.6% PQ) over the RGB baseline. This confirms that simple input-level concatenation is insufficient for the transformer blocks to learn the complex spatial correlations required under severe sensor degradation. In contrast, our mid-fusion exploits semantic-level features, yielding a significantly higher gain. Indeed, it improves the global PQ from 48.1% to 51.4%. This yields a gain of 3.3 percentage points while introducing a limited increase in the number of parameters, from 47 M to 53 M, FLOPs from 136 G to 144 G, and latency from 185 ms to 198 ms on a Tesla T4. This indicates that the proposed fusion strategy is able to effectively exploit geometric cues without significantly affecting the model complexity.

A more detailed analysis indicates that the improvement is reflected in both *things* and *stuff* categories. Specifically, PQ for things increases from 35.0% to 39.2%, and for stuff from 57.6% to 60.2%. This suggests that the additional modality contributes not only to object-level recognition but also to the delineation of amorphous regions. This behavior is consistent with the role of LiDAR data, which provides complementary spatial structure that can refine both instance boundaries and large homogeneous areas. The latency overhead of 13 ms represents a favorable trade-off given the substantial improvement of 3.3 points in PQ.

Benchmarking on the MUSES test set. Tab. 2 presents the performance comparison on the MUSES test set. Our Mid-Fusion approach achieves a PQ of 51.7%, outperforming the RGB-only Mask2Former [7] baseline by 4.8 points. Compared to architectures with a similar parameter budget ($\sim$50–55 M), such as HRFuser [4] and the Swin-T adaptation of MaskDINO [15], our method provides a significant gain of +7.8% and +2.3% PQ, respectively. Although state-of-the-art models such as DGFusion [6] and CAFuser [5] reach higher absolute scores, they rely on significantly larger parameter counts and utilize a broader set of modalities including radar and events. In particular, our model remains within a 1.9% PQ margin of the MUSES quadrimodal baseline [3], despite requiring approximately 60% fewer parameters ($\sim$130 M vs. 53 M). This demonstrates that a surgical mid-fusion of LiDAR and RGB is highly effective for robust panoptic segmentation while maintaining a lightweight profile suitable for practical deployment.

Performance under different conditions. To further investigate the behavior of the model, Tab. 3 reports PQ across different weather and illumination conditions. The proposed multimodal approach demonstrates a consistent advantage over the RGB-only baseline in most scenarios. We observe significant improvements in nighttime frames (+7.0

Table 3. **Panoptic Quality (PQ) across different weather and illumination conditions on the MUSES validation set.** All values are reported as percentages (%). In the last row, M2F indicates Mask2Former. In **bold** the best performance for each condition.

Model	Clear	Fog	Rain	Snow	Day	Night	All
Mask2Former [7]	46.1	58.3	43.1	46.2	49.4	44.0	48.1
Early fusion	47.2	**59.4**	44.0	44.0	49.0	46.1	48.7
Mid fusion (Ours)	**51.3**	57.6	**48.1**	**50.0**	**50.8**	**51.0**	**51.4**
Δ (M2F $\rightarrow$ Mid fusion)	+5.2	-0.7	+5.0	+3.8	+1.4	+7.0	+3.3

points) and rain (+5.0 points), along with a notable gain in snow (+3.8 points). The nighttime results represent the most significant enhancement, suggesting that the geometric consistency of LiDAR effectively compensates for the degraded visual signal in low-light environments.

Conversely, a performance drop of 0.7 PQ points is observed in fog condition with respect to the RGB baseline. However, a more granular analysis reveals a clear contrast between lighting conditions: while the multimodal approach provides a substantial boost in nighttime fog (+12.3 PQ), it suffers from a 3.1 PQ decrease in daytime fog. This suggests that the gating mechanism, while highly effective in low-light environments, may struggle to filter LiDAR backscattering noise when the visual signal remains informative [9, 12]. Nevertheless, the model remains highly effective in standard conditions, achieving substantial gains in clear weather (+5.2 points) and a moderate improvement in daytime scenes (+1.4 points). This confirms that the proposed LiDAR fusion provides a general benefit to panoptic perception, regardless of the specific environmental challenges.

Overall, these results highlight that the proposed method is robust across varying environmental conditions while also exposing a limitation in scenarios where the auxiliary modality might be intrinsically degraded.

4.5. Ablation Studies

In this section, we conduct a series of ablation experiments to validate the design choices of our multimodal fusion approach. All models are evaluated on the MUSES validation set using the same training schedule and hyperparameters described in Sec. 4.3.

Fusion module components. We first evaluate the contribution of each term in the gated residual modulation block: scale ($\boldsymbol{\gamma}$), shift ($\boldsymbol{\beta}$), and gating ($\boldsymbol{g}$). For each experiment, we apply the same architectural modification across all feature resolutions. As shown in Tab. 4, integrating LiDAR features solely via scaling ($\boldsymbol{\gamma}$) or shift ($\boldsymbol{\beta}$) provides a performance gain over the baseline, with $\boldsymbol{\beta}$ being more effective (+2.8% PQ). Interestingly, an ungated combination of both components ($\boldsymbol{\gamma} + \boldsymbol{\beta}$) performs worse than the $\boldsymbol{\beta}$-only variant (50.4% vs. 50.9% PQ), suggesting that without a gating mechanism, direct injection of LiDAR features introduces spatial noise that degrades the pre-trained RGB representations. The inclusion of the gating mechanism $\boldsymbol{g}$ addresses this issue, yielding the best performance (51.4% PQ) for the full model and confirming its role as a learned spatial filter. Notably, all mid-fusion variants significantly outperform the early fusion baseline, justifying the hierarchical integration strategy.

Table 4. **Ablation on fusion components on the MUSES validation set.** $\boldsymbol{\gamma}$, $\boldsymbol{\beta}$, and $\boldsymbol{g}$ denote scale, shift, and gating, respectively. Δ PQ indicates the gain over the Mask2Former baseline. In **bold** the highest value for each metric.

Configuration	$\mathrm{PQ}_{\mathrm{th}}$ (%)	$\mathrm{PQ}_{\mathrm{st}}$ (%)	PQ (%)	Δ PQ
Mask2Former	35.0	57.6	48.1	–
Early fusion	36.0	57.9	48.7	+0.6
Gated ($\boldsymbol{\gamma}$ only)	36.5	59.6	49.9	+1.8
Gated ($\boldsymbol{\beta}$ only)	38.4	60.0	50.9	+2.8
Ungated ($\boldsymbol{\gamma} + \boldsymbol{\beta}$)	37.7	59.6	50.4	+2.3
Full model (Ours)	**39.2**	**60.2**	**51.4**	**+3.3**

Multi-scale feature sensitivity. We investigate the impact of the four feature scales (F_1 to F_4) using a leave-one-out approach. The results in Tab. 5 demonstrate that removing any single resolution leads to a performance drop (between 1.2 and 1.5 PQ points) compared to the full model. Removing the intermediate scale F_3 (1/16 res.) results in the lowest PQ (49.9%), suggesting its critical role in bridging high-resolution details and global context. While the full model provides the best overall and instance-level ($\mathrm{PQ}_{\mathrm{th}}$) results, removing F_2 leads to a marginal improvement in $\mathrm{PQ}_{\mathrm{st}}$ (60.3%), indicating that while certain scales might introduce slight over-segmentation in amorphous regions, their simultaneous integration is essential for robust panoptic quality.

LiDAR validity mask. The importance of the binary validity mask is quantified in Tab. 6. Removing the mask leads to a 1.5% PQ drop relative to the full model. Given

Table 5. **Scale sensitivity analysis on the MUSES validation set.** Each "No F_k" row represents a model trained using 3 out of 4 LiDAR feature scales. Δ PQ indicates the gain over the Mask2Former baseline. In **bold** the highest value for each metric.

Configuration	PQ_{th} (%)	PQ_{st} (%)	PQ (%)	Δ PQ
Mask2Former	35.0	57.6	48.1	–
Early fusion	36.0	57.9	48.7	+0.6
No F_1 (1/4 res.)	36.9	60.0	50.2	+2.1
No F_2 (1/8 res.)	36.3	**60.3**	50.2	+2.1
No F_3 (1/16 res.)	35.7	60.2	49.9	+1.8
No F_4 (1/32 res.)	36.3	60.1	50.1	+2.0
Full model (Ours)	**39.2**	60.2	**51.4**	**+3.3**

Table 6. **Ablation on the LiDAR validity mask on the MUSES validation set.** "No mask" indicates the model was trained without the binary validity channel. Δ PQ indicates the gain over the Mask2Former baseline. In **bold** the highest value for each metric.

Configuration	PQ_{th} (%)	PQ_{st} (%)	PQ (%)	Δ PQ
Mask2Former [7]	35.0	57.6	48.1	–
Early fusion	36.0	57.9	48.7	+0.6
No mask	36.2	59.8	49.9	+1.8
Full model (Ours)	**39.2**	**60.2**	**51.4**	**+3.3**

the inherent sparsity of LiDAR projections, the mask serves as a crucial prior, allowing the gating mechanism $\boldsymbol{g}$ to distinguish between valid measurements and empty spatial regions, thus preventing the injection of uninformative noise into the RGB features. Even without the mask, the model maintains a gain of 1.8% over the baseline, further confirming the superiority of mid-fusion over early fusion (+0.6%).

5. Limitations

Although our model shows significant gains in low-light and rainy conditions, it faces challenges in daytime fog (-3.1% PQ). We hypothesize that this performance drop might be related to LiDAR backscattering, which can potentially create phantom detections that the current gating mechanism may not fully filter when the RGB signal remains informative. In contrast to higher-capacity models or condition-aware architectures that utilize dynamic gradient balancing, our lightweight gated modulation may be more susceptible to such sensory noise. Additionally, our 198 ms latency on a Tesla T4 GPU is competitive for a multi-sensor setup but may approach the upper limit for specific high-frequency real-time applications. This suggests that further architectural optimization of the auxiliary LiDAR encoder could be beneficial for deployment on resource-constrained edge devices.

6. Conclusions

In this work, we presented an efficient gated fusion strategy for multimodal panoptic segmentation in adverse environmental conditions. By integrating LiDAR geometric cues into a transformer-based architecture through a lightweight gated residual modulation, we addressed the inherent limitations of RGB sensors in scenarios characterized by degraded visual signals.

Our evaluation on the MUSES dataset suggests that the proposed mechanism can yield a 3.3 point PQ improvement over the baseline while maintaining a compact architectural footprint. These results indicate that robust perception can be achieved with a modest overhead of 6 M parameters, potentially offering a viable direction for autonomous driving applications where resource efficiency is as critical as absolute performance.

Beyond the immediate performance benefits, this study highlights the potential of gated residual modulation as a modular building block for multi-sensor perception. While high-capacity models achieve higher absolute scores through increased complexity, the significant improvements of our full model in nighttime conditions (+7.0 PQ) suggest a heightened reliability in critical environments where standard vision-based systems typically fail. Overall, our findings indicate that meaningful robustness can be recovered with low computational overhead, supporting the development of efficient perception systems for real-world autonomous applications.

References

[1] Mario Bijelic, Tobias Gruber, Fahim Mannan, Florian Kraus, Werner Ritter, Klaus Dietmayer, and Felix Heide. Seeing through fog without seeing fog: Deep multimodal sensor fusion in unseen adverse weather. In *2020 IEEE/CVF Conference on Computer Vision and Pattern Recognition (CVPR)*, pages 11679–11689, 2020. 1

[2] David C. Blair. Information retrieval, 2nd ed. c.j. van rijsbergen. *J. Am. Soc. Inf. Sci.*, 30:374–375, 1979. 4

[3] Tim Brödermann, David Bruggemann, Christos Sakaridis, Kevin Ta, Odysseas Liagouris, Jason Corkill, and Luc Van Gool. Muses: The multi-sensor semantic perception dataset for driving under uncertainty. In *European Conference on Computer Vision (ECCV)*, 2024. 1, 2, 4, 5

[4] Tim Broedermann, Christos Sakaridis, Dengxin Dai, and Luc Van Gool. Hrfuser: A multi-resolution sensor fusion architecture for 2d object detection. *2023 IEEE 26th International Conference on Intelligent Transportation Systems (ITSC)*, pages 4159–4166, 2022. 5

[5] Tim Broedermann, Christos Sakaridis, Yuqian Fu, and Luc Van Gool. Cafuser: Condition-aware multimodal fusion for robust semantic perception of driving scenes. *IEEE Robotics and Automation Letters*, 10:3134–3141, 2024. 1, 2, 5

[6] Tim Brödermannn, Christos Sakaridis, Luigi Piccinelli, Wim Abbeloos, and Luc Van Gool. Dgfusion: Depth-guided sensor fusion for robust semantic perception. *IEEE Robotics and Automation Letters*, 11(3):3334–3341, 2026. 1, 2, 5

[7] Bowen Cheng, Ishan Misra, Alexander G. Schwing, Alexander Kirillov, and Rohit Girdhar. Masked-attention mask transformer for universal image segmentation. In *CVPR*, 2022. 2, 4, 5, 6, 7

[8] Marius Cordts, Mohamed Omran, Sebastian Ramos, Timo Rehfeld, Markus Enzweiler, Rodrigo Benenson, Uwe Franke, Stefan Roth, and Bernt Schiele. The cityscapes dataset for semantic urban scene understanding. *2016 IEEE Conference on Computer Vision and Pattern Recognition (CVPR)*, pages 3213–3223, 2016. 2, 4

[9] Mariella Dreissig, Dominik Scheuble, Florian Piewak, and Joschka Boedecker. Survey on lidar perception in adverse weather conditions. In *2023 IEEE Intelligent Vehicles Symposium (IV)*, 2023. 6

[10] Di Feng, Christian Haase-Schütz, Lars Rosenbaum, Heinz Hertlein, Claudius Gläser, Fabian Timm, Werner Wiesbeck, and Klaus Dietmayer. Deep multi-modal object detection and semantic segmentation for autonomous driving: Datasets, methods, and challenges. *IEEE Transactions on Intelligent Transportation Systems*, 22(3):1341–1360, 2021. 1

[11] Jitesh Jain, Jiacheng Li, Man Chun Chiu, Ali Hassani, Nikita Orlov, and Humphrey Shi. Oneformer: One transformer to rule universal image segmentation. *2023 IEEE/CVF Conference on Computer Vision and Pattern Recognition (CVPR)*, 2022. 2

[12] Jiyoon Kim, Bum-jin Park, and Jisoo Kim. Empirical analysis of autonomous vehicle's lidar detection performance degradation for actual road driving in rain and fog. *Sensors*, 23(6), 2023. 6

[13] Alexander Kirillov, Yuxin Wu, and Qihang Yu. Coco 2018 panoptic segmentation task api, 2018. 4

[14] Alexander Kirillov, Kaiming He, Ross Girshick, Carsten Rother, and Piotr Dollar. Panoptic segmentation. In *Proceedings of the IEEE/CVF Conference on Computer Vision and Pattern Recognition (CVPR)*, 2019. 1, 2, 4

[15] Feng Li, Hao Zhang, Huaizhe Xu, Shilong Liu, Lei Zhang, Lionel M. Ni, and Heung-Yeung Shum. Mask dino: Towards a unified transformer-based framework for object detection and segmentation. In *Proceedings of the IEEE/CVF Conference on Computer Vision and Pattern Recognition (CVPR)*, pages 3041–3050, 2023. 2, 5

[16] Tingting Liang, Hongwei Xie, Kaicheng Yu, Zhongyu Xia, Zhiwei Lin, Yongtao Wang, Tao Tang, Bing Wang, and Zhi Tang. Bevfusion: A simple and robust lidar-camera fusion framework. In *Advances in Neural Information Processing Systems*, pages 10421–10434, 2022. 2

[17] Tsung-Yi Lin, Michael Maire, Serge Belongie, James Hays, Pietro Perona, Deva Ramanan, Piotr Dollár, and C. Lawrence Zitnick. Microsoft coco: Common objects in context. In *Computer Vision – ECCV 2014*, pages 740–755, 2014. 2

[18] Youquan Liu, Runnan Chen, Xin Li, Lingdong Kong, Yuchen Yang, Zhaoyang Xia, Yeqi Bai, Xinge Zhu, Yuexin Ma, Yikang Li, Yu Qiao, and Yuenan Hou. Uniseg: A unified multi-modal lidar segmentation network and the openpcseg codebase. In *Proceedings of the IEEE/CVF International Conference on Computer Vision (ICCV)*, pages 21662–21673, 2023. 1

[19] Ze Liu, Yutong Lin, Yue Cao, Han Hu, Yixuan Wei, Zheng Zhang, Stephen Lin, and Baining Guo. Swin transformer: Hierarchical vision transformer using shifted windows. *2021 IEEE/CVF International Conference on Computer Vision (ICCV)*, pages 9992–10002, 2021. 2

[20] Ilya Loshchilov and Frank Hutter. Decoupled weight decay regularization. In *International Conference on Learning Representations*, 2017. 4

[21] Ilya Loshchilov and Frank Hutter. SGDR: stochastic gradient descent with warm restarts. In *5th International Conference on Learning Representations, (ICLR), Conference Track Proceedings*, 2017. 4

[22] Su Pang, Daniel Morris, and Hayder Radha. Clocs: Camera-lidar object candidates fusion for 3d object detection. In *2020 IEEE/RSJ International Conference on Intelligent Robots and Systems (IROS)*, pages 10386–10393, 2020. 2

[23] Ethan Perez, Florian Strub, Harm de Vries, Vincent Dumoulin, and Aaron C. Courville. Film: Visual reasoning with a general conditioning layer. In *AAAI*, 2018. 2, 3

[24] Aditya Prakash, Kashyap Chitta, and Andreas Geiger. Multi-modal fusion transformer for end-to-end autonomous driving. In *2021 IEEE/CVF Conference on Computer Vision and Pattern Recognition (CVPR)*, pages 7073–7083, 2021. 1, 2

[25] Christos Sakaridis, Dengxin Dai, and Luc Van Gool. Guided curriculum model adaptation and uncertainty-aware evaluation for semantic nighttime image segmentation. *2019 IEEE/CVF International Conference on Computer Vision (ICCV)*, pages 7373–7382, 2019. 1

[26] Christos Sakaridis, Dengxin Dai, and Luc Van Gool. Acdc: The adverse conditions dataset with correspondences for semantic driving scene understanding. In *2021 IEEE/CVF International Conference on Computer Vision (ICCV)*, pages 10745–10755, 2021. 1

[27] Sourabh Vora, Alex H Lang, Bassam Helou, and Oscar Beijbom. Pointpainting: Sequential fusion for 3d object detection. In *Proceedings of the IEEE/CVF conference on computer vision and pattern recognition*, pages 4604–4612, 2020. 2

[28] Jörg Wagner, Volker Fischer, Michael Herman, and Sven Behnke. Multispectral pedestrian detection using deep fusion convolutional neural networks. In *24th European Symposium on Artificial Neural Networks, ESANN*, 2016. 2

[29] Jiaming Zhang, Huayao Liu, Kailun Yang, Xinxin Hu, Ruiping Liu, and Rainer Stiefelhagen. Cmx: Cross-modal fusion for rgb-x semantic segmentation with transformers. *IEEE Transactions on Intelligent Transportation Systems*, 24(12): 14679–14694, 2023. 2