DIGITAL KEYBOARD

# GS1/GS2

OPERATING MANUAL

YAMAHA

YAMAHA

# introduction

*Yamaha's GS1 and GS2 digital keyboards. The beginning of new era in synthesis . . . . the dawn of a new age in keyboards. By effectively combining digital technology with a design which is totally devoted to the true musician, Yamaha has created a landmark in the history of musical instruments.*

*At the center of this new approach to electronic music is the idea that the sophistication of digital synthesis be made available to the music-minded, rather than the computer-minded. An understading of computers or synthesizers is not necessary to perform with the GS keyboards–they let you concentrate on being a musician, rather than a programmer.*

*This is what makes the GS1 and GS2 different from any other keyboards. The surprising simplicity of these instruments is evidenced by the front panels. At the forefront are the sixteen memory location buttons–they allow for instantaneous switching from one sound to another, with no oscillators to tune, no filters or envelopes to adjust. To the right and left of these are the real-time performance controls: volume; active three-band EQ; vibrato and tremolo, both with adjustable speed and depth, (and both of which can be activated from the foot pedals); ensemble (for chorus effects); detune (great for honky-tonk piano sounds and other detune effects); and, on the GS1, a Touch Response switch which activates the same independent aftertouch capabilities made famous by Yamaha's CS-80 polyphonic synthesizer.*

*But, as with any musical instrument, the single most important aspect is the sound. The GS1 and GS2's digital FM (frequency modulation) tone generators are capable of producing an amazingly realistic and unbelievably vast spectrum of sounds. Their 16-voice velocity sensitive keyboards allow the musician control of sounds ranging from piano to violin to trumpet to analog synthesizer . . . . to new sounds never heard before. These sonic possibilities, combined with the performance-oriented keyboard and controls, are what make the GS keyboards so musically expressive.*

*The top of the line of all Yamaha keyboards, the GS1 is beautiful as it is versatile. Although ideal for permanent setup in a studio or on the concert stage, it can be disassembled for touring (with a total weight of only 72 kg or 158.7 lbs). Its full 88-note keyboard, as mentioned before, is both velocity sensitive and pressure sensitive: the musical nuances available to the performer range from subtle to extraordinary. With the GS1, the keyboardist can even add effects to real instrument sounds which those instruments themselves are incapable of, thus opening new doorways to musical expression.*

*The GS2 is essentially a portable version of the GS1–it offers the traveling musician the roadability he needs with the same sound possibilities as the GS1, controlled by a 73-key, 16-voice, velocity sensitive keyboard.*

*Like the GS1, the GS2 has sixteen voice memory locations, the full complement of expression controls, three foot pedals (for vibrato, tremolo, and sustain), and includes front-panel Tune and Store controls.*

*Whether your background is in synthesizer, piano, organ, or any other keyboard, playing the GS1 or GS2 will be an unforgettable experience. It is the opportunity for your senses of sight, touch, and hearing to witness the next step in the evolution of synthesizers, the beginning of a new age of expression and sound in the development of electronic musical instruments.*

# table of contents


2 setup

4 front panel controls
- Tune (GS2)
- Detune
- Vibrato
- Tremolo
- Ensemble
- Touch Response (GS1)
- Memory Location Buttons
- Equalizer
- Volume
- Store Indicator (GS1)
- Store Button (GS2)
- Card Reader
- Power Switch (GS1)

6 additional controls and connections
- Program Lock
- Line Out Switch
- Pitch (GS1)
- Store Button (GS1)
- Foot Control Jack
- Phones Jack
- Foot Switch Connector (GS2)
- Output Connectors
- AC Power
- Power Switch (GS2)
- Voltage Selector (GS2)

8 loading the voice cards

10 using the performance controls

14 voice library system
- loading the backup batteries
- speaker/amplifier system

15 specifications

# GS1 setup

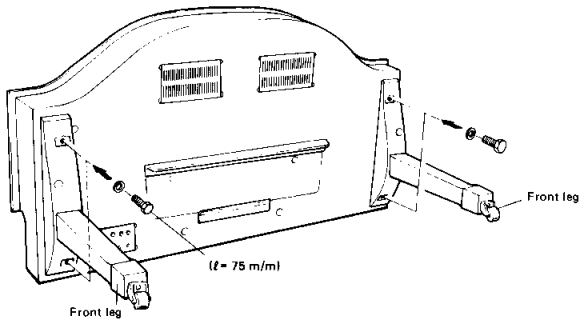


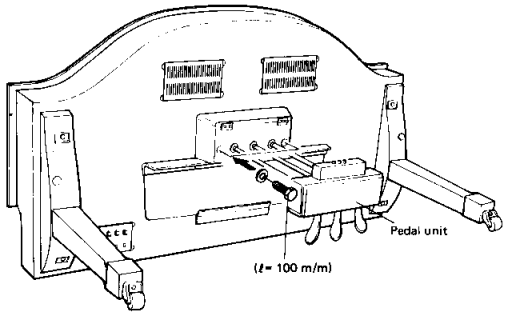


GS1

**1. Attaching the front legs**
Position the instrument as shown and attach the front legs with bolts and washers. A wrench is provided. Take care not to cross-thread or overtighten the bolts.

**2. Attaching the pedal unit**
Next, attach the pedal unit with the longer bolts and washers.

# GS2 setup

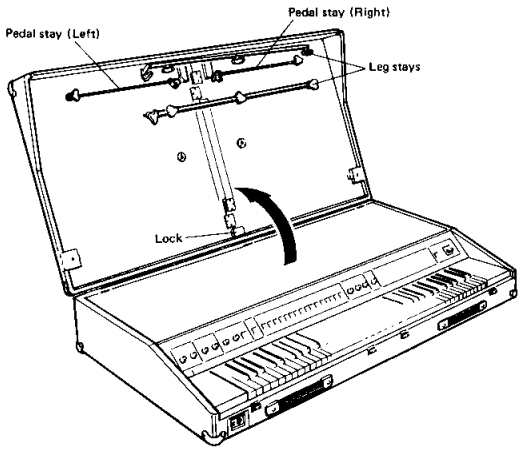


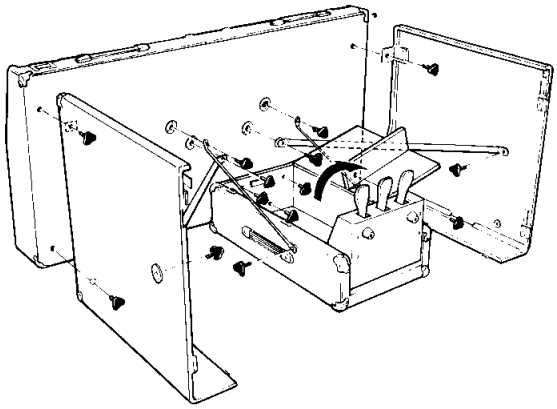

GS2

**1. Unpacking**
Unlatch the four catches and open the lid fully. Detach the lid from the body of the GS2 by uncoupling the four hinges.
Remove the eight thumbscrews, the leg stays, and the pedal stays.

**2. Assembly**
Position the instrument as shown and attach the legs (the two halves of the lid) using four of the thumbscrews removed from the lid. Attach the leg braces using the attached thumbscrews.
Attach the pedal unit to the body of the GS2 using the three knob screws stored inside the pedal unit. Attach the pedal stays using four knob screws. Note that the left and right stays are different.

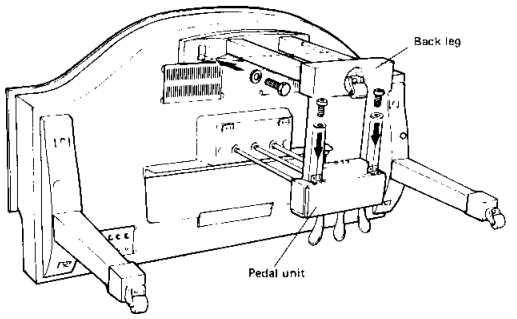


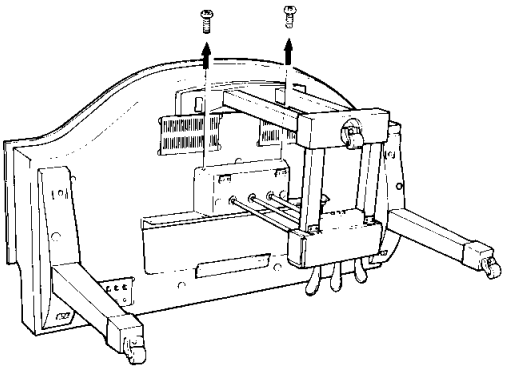

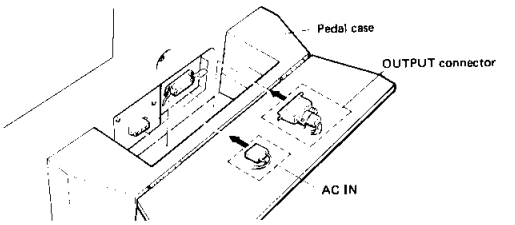


**3. Attaching the back leg**

First, remove the two Phillips retainer screws above the receiving sockets in the pedal unit. Then, after inserting the bottom beams of the back leg into the sockets, attach the leg to the body of the GS1 with bolts and washers.

Then fasten the back leg beams onto the pedal unit with the two screws.

**4. Pedal unit connections**

Remove the two screws holding the pedal unit cover. Plug the two connectors inside the pedal unit into the connectors on the body of the instrument. Then close the cover and refasten the two screws.

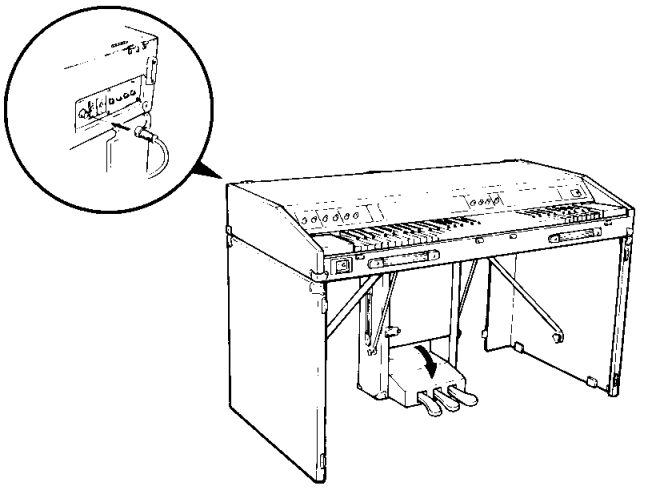

**3. Pedal cable**

Be sure to rotate the pedals so that they are pointing upwards, in addition to extending the pedal cable, before closing and latching the door on the pedal unit. The pedal cable should be guided through the opening in the upper left-hand corner.

Connect the pedal cable from the pedal unit to the Foot Sw connector on the left rear panel of the GS2.

# front panel controls

S1

**❶ TUNE (GS2 only—for GS1 tuning control, see page 6, "PITCH".)**

This is the master tuning control for the GS2. Turning the Tune control varies the pitch of the entire keyboard over a wide range. Set the control to about 10 o'clock for a standard pitch of A = 440.

**❷ DETUNE**

The Detune switch creates an "out of tune" effect which can be used to create honky-tonk piano and other exotic sounds. On the GS1 the "0" position is off, the "1" and "2" positions are "static" detune, and the "1" and "2" positions are "random" detune. On the GS2 the "0" position is off and the "1" and "2" positions are "static" detune. Two detune depths, shallow (1) and deep (2), are provided on both models. See page 12 for details.

**❸ VIBRATO**

These controls cause pitch modulation for a rich vibrato. The speed and depth of the vibrato effect can be adjusted with the Vibrato Speed and Vibrato Depth controls respectively. The vibrato effect is activated by depressing the vibrato (leftmost) pedal.

**❹ TREMOLO**

Causes volume modulation for a tremolo effect, the speed and depth of which may be adjusted with the Tremolo Speed and Tremolo Depth controls. The tremolo effect can be activated either by depressing the tremolo (center) pedal or by turning on the tremolo on/off switch to the right of the depth control (the indicator will light) for continous tremolo.

**❺ ENSEMBLE**

The Ensemble switch creates a vibrant "chorus" effect, utilizing a BBD (Bucket Brigade Device) analog delay circuit. Pressing the Ensemble switch turns it on, lighting the reminder indicator.

**❻ TOUCH RESPONSE (GS1 only)**

This switch activates the GS1's advanced after-touch capabilities. After a key has been struck, the volume and the timbre of the note may be controlled by varying the finger pressure on the key. This is a "push-on, push-off" type switch with an indicator lamp.

S2

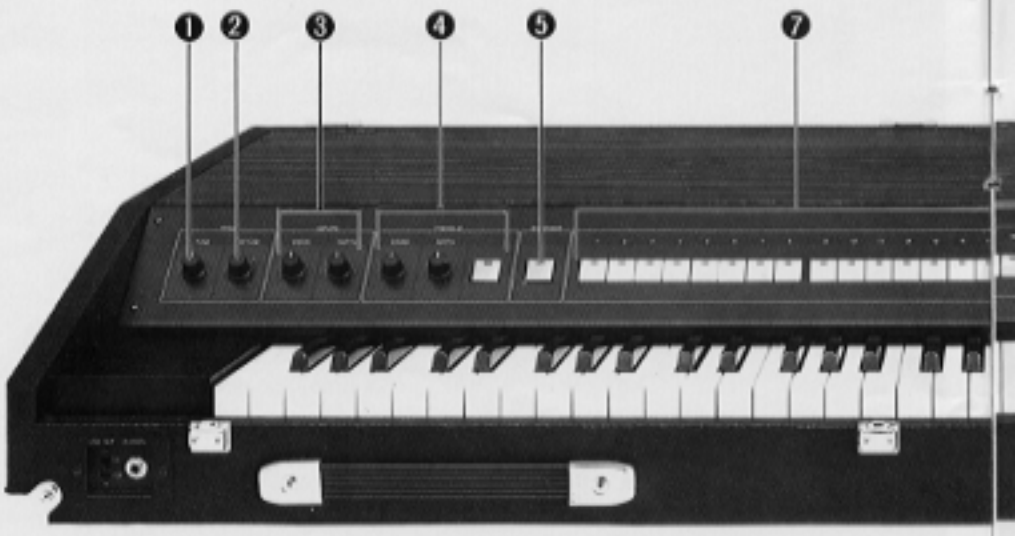

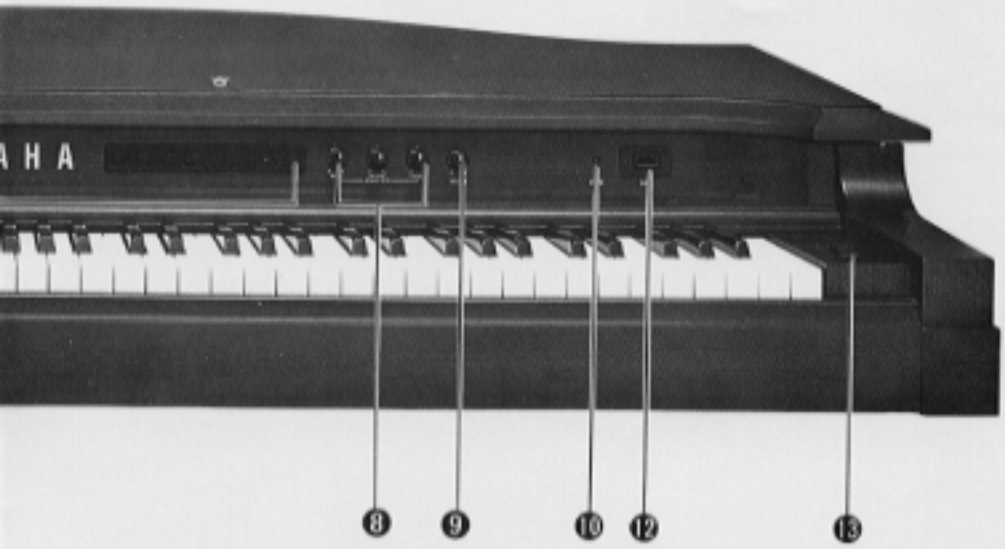


**❼ MEMORY LOCATION BUTTONS**
These switches allow instantaneous switching from one instrument voice to another. Up to 16 voices are available at a time, and may be selected by pressing the appropriate numbered memory location button (only one button may be pressed at a time). The 16 voices may be chosen from Yamaha's voice library, and may be altered at any time by loading new voices from magnetic cards.

**❽ EQUALIZER**
The 3-band active equalizer gives you extra flexible contorl over tone quality. Bass, Middle, and Treble controls are provided. Centering the controls (12 o'clock) provides flat frequency response.

**❾ VOLUME**
The Volume control sets the overall volume level at all output jacks.

**❿ STORE INDICATOR (GS1)**
This indicator lights when voice information is being written onto magnetic voice cards. The GS1 Store button is on the panel underneath the side of the keyboard. (see page 6).

**⓫ STORE BUTTON (GS1 → p. 6)**
Used to write voice information on magnetic cards. See page 9 for details.

**⓬ CARD READER**
The card reader is used to transfer instrument voices from the Yamaha Voice Library into the 16 voice memory locations for use. The card reader may also be used to make copies of existing voice cards or to create new voices by "layering." See pages 8 and 9 for details.

**⓭ POWER SWITCH (GS2 → p. 7)**
When power is turned on, Memory Location Button #1 will light. Turning power off does not erase the 16 voice memory locations. See page 14 for loading the backup batteries.

# additional controls and connections

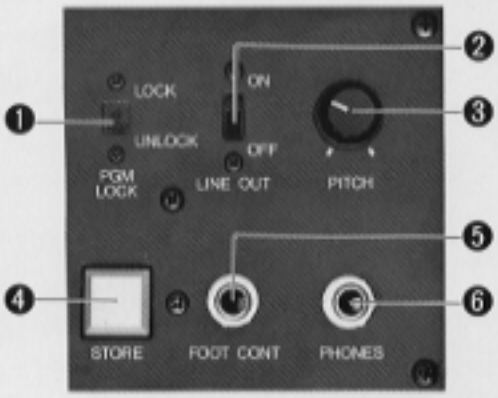


Under the right end of the keyboard

GS1

❶ **PROGRAM LOCK**
When in the Lock position, this switch prevents loading of voice cards into voice memory locations. This avoids unwanted alterations of voice assignments. In the Unlock position, voice cards can be loaded and assigned to memory locations at any time.

❷ **LINE OUT SWITCH**
In the Off position, this switch cuts off output from the balanced XLR and unbalanced audio output connectors, allowing headphones-only operation. In the On position, audio appears at the output connectors (normal operation).

❸ **PITCH (GS2 → p. 4 "TUNE")**
This is the master tuning control for the GS1. Turning the Pitch control varies the pitch of the entire keyboard over a wide range. Set the control to about 10 o'clock for a standard pitch of A = 440.

❹ **STORE BUTTON (GS2 → p. 5)**
Used to write voice information on magnetic cards. See page 9 for details.

❺ **FOOT CONTROL JACK**
Connecting the optional foot control (YAMAHA FC-3A) provides the performer with continuous control of overall keyboard volume. Combined with the velocity-sensitive initial touch response (and selectable after-touch response on the GS1), unbelievable flexibility of expression has been achieved.

❻ **PHONES JACK**
You can plug in a set of headphones to hear a mono mix of the GS1's output. Audio output from the balanced XLR and unbalanced output connectors is unaffected. Use the Line Out switch ❷ for private listening.

GS2

Left rear panel

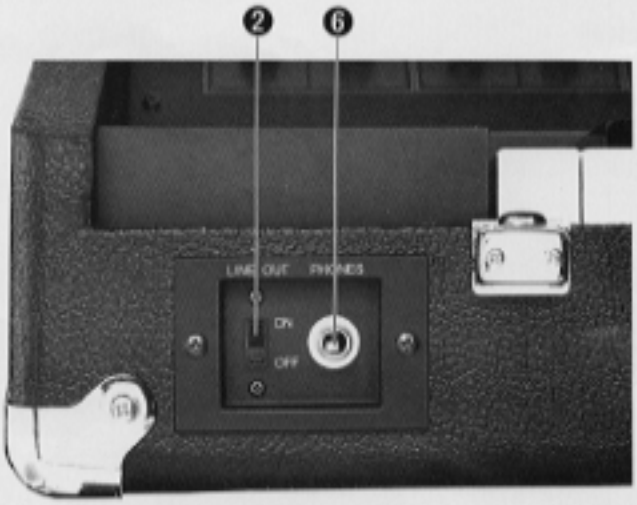


Front—under left end of keyboard

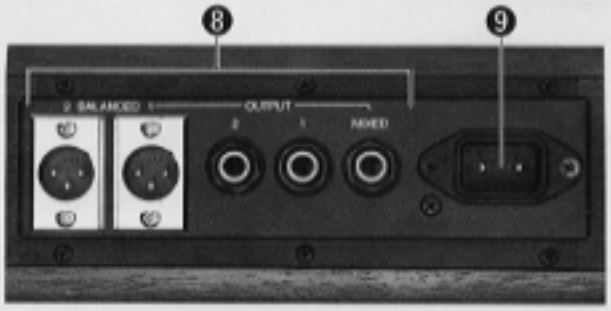


On the rear of the pedal unit

**❼ FOOT SWITCH CONNECTOR (GS2 only)**
The cable from the pedal unit should be connected to the Foot Switch Connector before using the GS2. See page 3.

**❽ OUTPUT CONNECTORS**
Both balanced XLR connectors and standard phone jack outputs are provided. Output is in stereo, with the two channels appearing at Output 1 and Output 2. A mono mix is also provided, at the Mixed phone jack. See page 14.

**❾ AC POWER**
Connect the female end of the AC power cable to the AC Power jack. Make sure that the voltage selector (GS2 only) is set to the proper voltage BEFORE connecting power.

**❿ POWER SWITCH (GS1 → p. 5)**
When power is turned on, Memory Location Button #1 will light. Tuning power off does not erase the 16 voice memory locations. See page 14 for loading the back-up batteries.

**⓫ VOLTAGE SELECTOR (GS2 only)**
The GS2 has a line voltage selector which permits it to be used with the various line voltages of different countries. Make sure that the voltage selector is set to the proper line voltage BEFORE connectiong power.

General Model

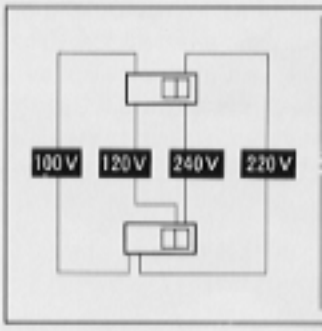


US, Canadian Model

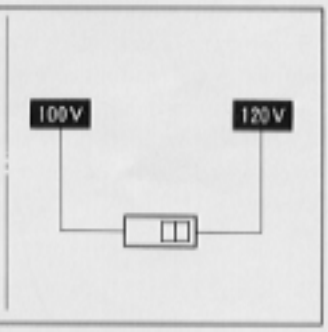


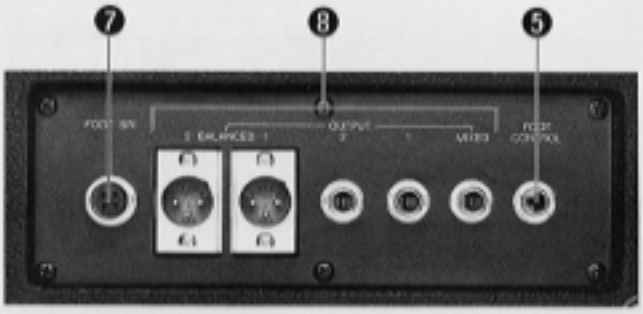


Right rear panel

Right side panel

# loading the voice cards

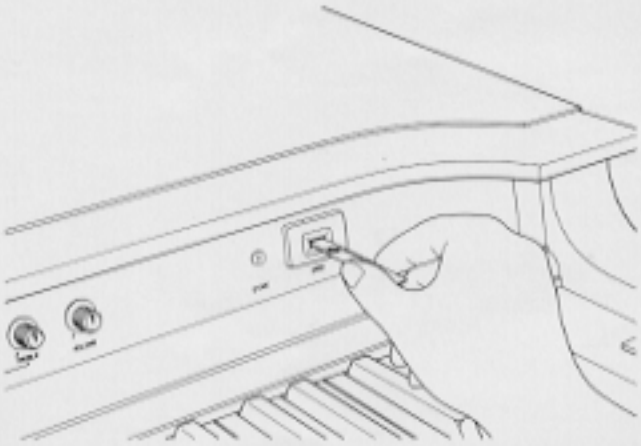

GS1

### loading the voice cards

When using the GS1 or GS2, the performer can choose instrument voices from Yamaha's vast voice library. Up to 16 of these are accessible at any given time and can be selected just by pushing the memory location button corresponding to the desired voice. This set of 16 voices may be changed at any time by loading other voices from the magnetic card voice library. Once the performer's choice of 16 voices has been stored in the instrument's memory, they remain indefinitely, and are not erased even if power is switched off.

**Voice Card Loading Procedure**

Each voice in the library is contained on one magnetic voice card. The performer may choose up to 16 voice cards and load them into numbered voice memory locations in any order. For example, it is possible to first load all 16 memory locations in order from 1 to 16 with 16 different voice cards, and then later change voice number 5 by loading one voice card into that location. Each voice card has two sides, A and B. On the GS1, it is necessary to load both side A and side B of the card in order to load one voice. On the GS2, only side A is used.

**To operate the card reader:**

1. Insert side A of the voice card into the card reader as far as it will go. The printed side of the card should be facing up, and the end labeled "A" should be inserted.
2. Set the Program Lock switch to the Unlock position to allow the voice memory to be altered.
3. Push the numbered memory location button corresponding to the memory location to be loaded. The card reader motor will start.
4. Push the card in further until it catches and is pulled in automatically. If this is not accomplished within about 3 seconds the motor will stop, and the memory location button will have to be pressed again to restart it.
5. The card will be read and automatically returned. The indicator flashes 4 times to verify that the card has been correctly loaded.

GS2

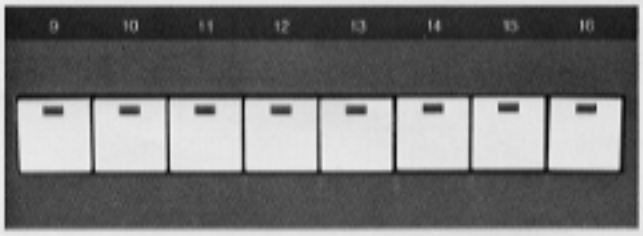

6. In the case of the GS2, loading is now complete. For the GS1, it is necessary to complete the load operation by reading side B. Insert the end of the card labeled "B" into the reader, printed side up. It is not necessary to press the memory location button again. The card will be read and returned. The indicator flashes 4 times to verify correct loading. Note that you can still play the keyboard throughout the loading process. After the indicator stops flashing, the newly loaded voice will be heard.
7. Setting the Program Lock switch to the Lock position after all voices have been loaded prevents unwanted alterations to the voice memory.

* Rapid, continuous flashing of the indicator means that there was an error in reading the card. Stop the flashing by pressing any memory location; then try loading the card again. Even if only side B was in error, the load must be started from side A again. Read errors may be caused by power line noise, bent or dirty cards, or cards that have been erased by a strong magnetic field.

**Transferring Memorized Voices onto Cards**

The GS1 and GS2 have the ability to take a voice that is in memory and save it on a voice card for later use. This allows additional copies of existing voice cards to be made.

The procedure is similar to that for loading cards into memory, except that the Store button should be pressed and held while the memory location button is pressed. After the card is written and ejected, it is automatically pulled back into the reader so that the information written can be read back and verified. Remember to write side B of GS1 cards. Any previous voice information on the card is lost. A card can be protected from further writing by cutting off its write-protect corner, similar to the "no-record" tabs on a standard audio cassette. → See page 14.

**Memory Backup Batteries**

The GS1 and GS2 are equipped with built-in batteries to supply power to the voice memory when AC power is off. This enables memory to be preserved even when power is turned off or there is a power failure. If 16 voices are sufficient for normal use, then they can be loaded just once and they will be retained indefinitely. → See page 14.

**Creating New Voices by "Layering" (GS1 only)**

With the GS1 it is possible to combine existing voices from the Yamaha library. The voice information from one side of one card can be combined with one side from another card to create a new sound. For example, you can load side B of one card, then load side B of a different card. The newly created voice can then be saved on another voice card for later use. Note that only two voices may be combined in this way. You may need to experiment with various combinations of voices in order to produce a usable sound.

# using the performance controls

GS1

**Vibrato**
The Vibrato effect lets you add even more variations to the large number of sounds available with this instrument. Vibrato is activated by depressing the vibrato (leftmost) pedal. The pedal takes effect softly, with no abrupt transition. The **Speed** control varies the speed of the effect. Lower settings of the control cause the pitch to vary more slowly, while higher settings cause it to vary more rapidly. The **Depth** control varies the depth of the effect. Lower settings produce a shallower effect (less pitch variation), while higher settings produce a deeper effect.

**Tremolo**
Tremolo is activated by depressing the tremolo (center) pedal. The pedal takes effect softly, with no abrupt transition. Alternatively, use the **Tremolo switch** (to the right of the depth control) to turn tremolo on continuously. In either case, the **Speed** control varies the speed of the effect. Lower settings of the control cause the volume to vary more slowly, while higher settings cause it to vary more rapidly. The **Depth** control varies the depth of the effect. Lower settings produce a shallower effect (less volume variation), while higher settings produce a deeper effect.

**Damper Pedal**
The damper (sustain) pedal works just like the damper pedal on a piano. Depressing it (the one on the far right) sustains all notes even after their keys have been released.

GS2

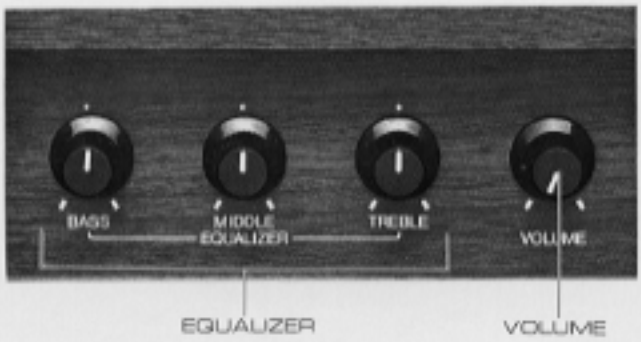

**Equalizer**
The 3-band equalizer provides additional flexibility of control over the instrument's sound. Three different frequency ranges can be controlled, Bass, Middle, and Treble. Setting all three to their 12 o'clock positions provides flat response.

**Volume**
The Volume control sets the overall volume level at all output jacks. Setting the level controls on the external amplifier/speaker system appropriately will allow the GS1/2 volume control to be adjusted by the performer over a wide range.

**Pitch (GS1)/Tune (GS2)**
This is the master tuning control. The pitch of the entire keyboard can be varied over a wide range. Set the control to about 10 o'clock for a standard pitch of A = 440. The range of the adjustment is about 434—448 cycles, or 60 cents.

DETUNE

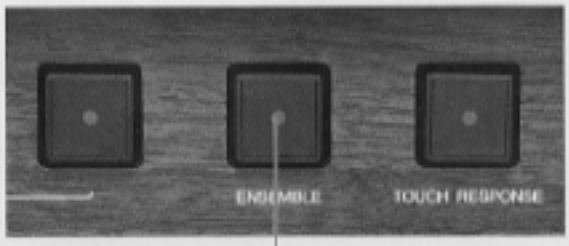


ENSEMBLE

GS1

**Detune**

The Detune switch creates an "out of tune" effect which can be used to create honky-tonk piano and various other effects. On the GS1 the "0" position is off, the "1" and "2" positions are static detune, and the "1" and "2" positions are random detune. On the GS2 the "0" position is off and the "1" and "2" positions are static detune. With static detune, the depth (amount of detuning) is a constant, determined only by the depth setting of the Detune switch ("1" or "2" on the GS1 and "1" or "2" on the GS2). With the GS1's random detuning, overall depth is determined by the depth setting ("1" or "2"), but an additional "random" factor is introduced on each note. Notes played one at a time will always be detuned by the same amount, but notes played in groups will each be detuned by a different amount that depends on the order in which the notes are played. When tuning the keyboard to other instruments before a performance, make sure the Detune switch is "off".

**Ensemble**

The Ensemble switch creates a multiple-instrument "chorus" effect. This feature inserts a time delay between Output 1 and Output 2, creating the effect of two different instruments, particularly when two amplifiers/speakers are connected to the instrument. The effect may also be obtained with only one speaker, but in that case the Mixed Output connector must be used.

GS2

DETUNE

ENSEMBLE

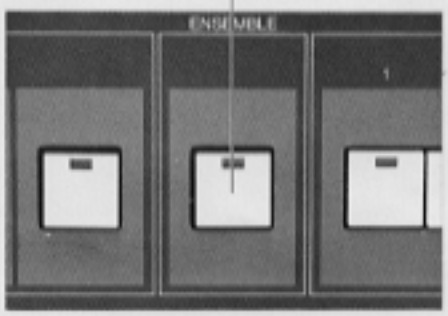

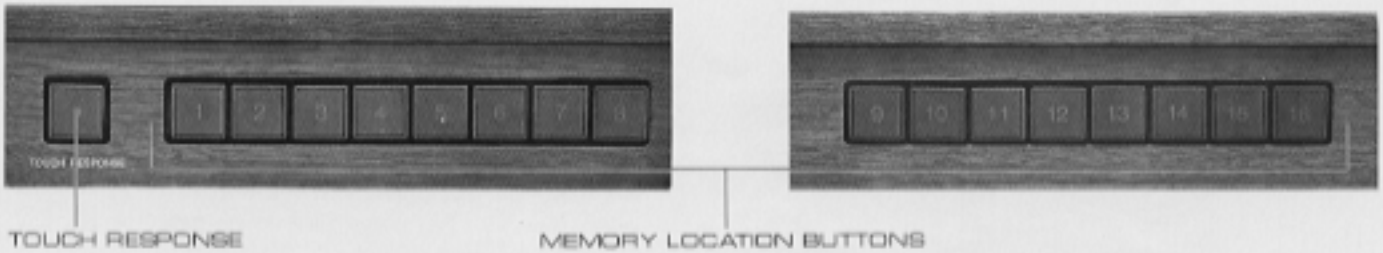


**Touch Response (GS1 only)**
This switch activates the GS1's advanced after-touch capabilities. After a key has been struck, the volume and the timbre, or bridghtness, of the note may be controlled by varying the finger pressure on the key.
Even when many notes are being played simultaneously, individual control over the volume of each note is retained. This control of timbre does vary in its effect on the sound from voice to voice. Combined with the GS1's velocity-sensitive initial touch response, the after-touch response feature is a powerful tool for musical expression. After-touch operates only with the Touch Response switch on. With the switch off, only the velocity-sensitive initial touch is effective.

**Memory Location Buttons**
These switches allow instantaneous switching from one instrument voice to another. Each numbered button controls one of 16 different voice memory locations, each of which contains one voice. The performer may switch to a new voice at any time just by pressing a different memory location button. The 16 voices in the voice memory can be selected from Yamaha's voice library. New voices can be loaded into the memory at any time using magnetic voice cards (see page 8). Note that it is not possible to press more than one memory location button at a time to combine voices.

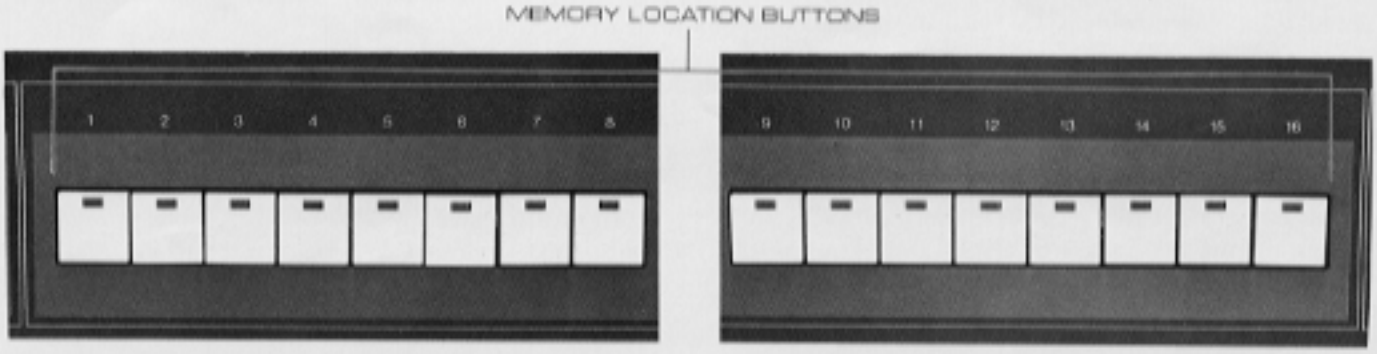

# voice library system

**Yamaha Voice Library**

The Yamaha Voice Library will initially contain 32 voices prepared by Yamaha's music specialists. 8 blank voice cards will also be provided. A special album is provided for convenient storage of the magnetic voice card library. The library is constantly being expanded to include new voices. Eventually there will be many new voices developed through Yamaha's ongoing efforts in musical instrument analysis and research.

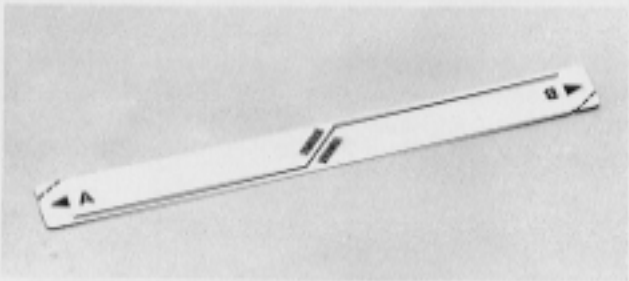

**Magnetic Voice Cards**

Each voice card is a thin magnetic strip that contains detailed voice information that enables the instrument to accurately reproduce the unique sound the card represents. Be sure to store the voice cards in a safe place away from heat, dust, or direct sunlight. Be careful not to crease them and avoid exposing them to strong magnetic fields. Yamaha recommends either purchasing a spare set of voice cards or copying the originally supplied voice cards onto optionally available blank cards to prevent the inconvenience of voice loss due to accidental damage or erasure of the original cards. If used carefully, voice cards will last for approximately 1000 loading operations. When the cards do begin to wear out, however, copies should be made and used for voice loading.

By cutting off the corners of a voice card (marked by dotted lines) the card is "write-protected" and cannot be accidentally erased or rewritten in the card reader.

# loading the backup batteries

**loading the backup batteries**

Before connecting the instrument, the following operations should be carried out.

In order to prevent the voice information from being erased when the power switch is switched off, the GS1 and GS2 are equipped with back-up batteries for the voice memory. Load the back-up batteries before any connections are made.

Insert the two standard-accessory alkaline batteries, placing them in proper polarities (+,−), and then close the cover.

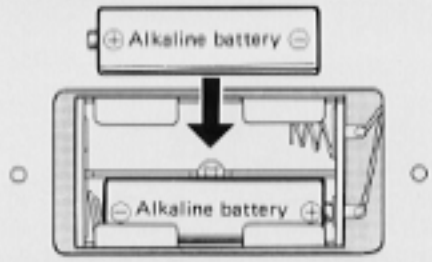


- The batteries have a service life of about 2 years. If the batteries are kept inside the GS after the life period has expired, liquid may leak out from the batteries and damage the unit. Therefore, they should be replaced before they reach their life span.
- When replacing the batteries, use alkaline batteries (Size: AA). Always replace both batteries.
- Leave the instrument switched "ON" when changing batteries to prevent loss of voices loaded in memory.

# speaker/ amplifier system

**Recommended Sound System**

The full, vibrant sound of the GS1 and GS2 can be best appreciated when played through a high-performance, full-range sound reinforcement system. A good basic setup would be a stereo mixer with full tone controls, such as the Yamaha MQ802 or M508, a power amplifier with good headroom, like the Yamaha P2100, and two S5115HT 3-way speaker systems.

# specifications GS1

| | |
|---|---|
| **KEYBOARDS** | 88 keys $A_{-1}$ ~ $C_7$ (7 1/3 octaves) |
| **TONE GENERATOR** | Frequency Modulation System<br>4 Carry<br>4 Modulation<br>8 EG |
| Maximum number of notes | 16 notes |
| **CONTROL PANEL** | |
| DETUNE | RANDOM 2<br>RANDOM 1<br>OFF 0<br>STATIC 1<br>STATIC 2 |
| TREMOLO | TREMOLO SPEED<br>TREMOLO DEPTH |
| VIBRATO | VIBRATO SPEED<br>VIBRATO DEPTH |
| TREMOLO Switch | ON/OFF |
| ENSEMBLE Switch | ON/OFF |
| TOUCH RESPONSE Switch | ON/OFF |
| TONE SELECTORS | 1, 2, 3, 4, 5, 6, 7, ~ 16 |
| EQUALIZER | BASS<br>MIDDLE<br>TREBLE |
| MASTER VOLUME | |
| CARD READER | 2 Pass/Tone |
| STORE Switch | |
| **OTHER CONTROLS & CONNECTIONS** | |
| MASTER PITCH | +35 Cent ~ –25 Cent |
| HEADPHONES Jack | 8 ohms Mixed OUT |
| FOOT CONTROL Jack | For Expression Pedal (YAMAHA FC-3A) |
| PGM. LOCK Switch | LOCK/UNLOCK |
| LINE Switch | ON/OFF |
| BATTERY (Memory back-up) | "AA" x 2 |
| **PEDAL CONTROLS** | |
| DAMPER Pedal | |
| TREMOLO Pedal | |
| VIBRATO Pedal | |
| **OUTPUT** | |
| Unbalanced (phone jack) | CH1, CH2, MIXED |
| balanced (XLR) | CH1, CH2 |
| **POWER CONSUMPTION** | |
| INPUT | AC 100V, 120V, 220V, 240V<br>95W |
| **DIMENSIONS** | |
| Width | 1,500 mm (59") |
| Depth | 832 mm (32-3/4") |
| Height | 826 mm (32-1/2") |
| Weight | 90 kg (198.4 lbs) |
| **ACCESSORIES** | |
| Voice Cards (32) | |
| Blank Cards (8) | |
| Card Album | |
| Power Cord | |
| Music Stand | |

# specifications GS2

| | |
|---|---|
| **KEYBOARDS** | 73 keys $E_0 \sim E_6$ (6 octaves) |
| **TONE GENERATOR** | Frequency Modulation System<br>2 Carry<br>2 Modulation<br>4 EG |
| Maximum number of notes | 16 notes |
| **CONTROL PANEL** | |
| DETUNE | OFF 0<br>STATIC 1<br>STATIC 2 |
| TREMOLO | TREMOLO SPEED<br>TREMOLO DEPTH |
| VIBRATO | VIBRATO SPEED<br>*VIBRATO DEPTH* |
| TREMOLO Switch | ON/OFF |
| ENSEMBLE Switch | ON/OFF |
| TONE SELECTORS | 1, 2, 3, 4, 5, 6, 7, ~ 16 |
| EQUALIZER | BASS<br>MIDDLE<br>TREBLE |
| MASTER VOLUME | |
| CARD READER | 1 Pass/Tone |
| STORE Switch | |
| **OTHER CONTROLS & CONNECTIONS** | |
| MASTER PITCH | +35 Cent ~ −25 Cent |
| HEADPHONES Jack | 8 ohms Mixed OUT |
| FOOT CONTROL Jack | For Expression Pedal (YAMAHA FC-3A) |
| PGM. LOCK Switch | LOCK/UNLOCK |
| LINE Switch | ON/OFF |
| BATTERY (Memory back-up) | "AA" x 2 |
| **PEDAL CONTROLS** | |
| DAMPER Pedal | |
| TREMOLO Pedal | |
| VIBRATO Pedal | |
| **OUTPUT** | |
| Unbalanced (phone jack) | CH1, CH2, MIXED |
| balanced (XLR) | CH1, CH2 |
| **POWER CONSUMPTION** | |
| INPUT | AC 100V, 120V, 220V, 240V<br>40W |
| **DIMENSIONS** | |
| Width | 1,283 mm (50-1/2") |
| Depth | 641 mm (25-1/4") |
| Height | 823.5 mm (32-1/2") |
| Weight | 72 kg (158.7 lbs) |
| **ACCESSORIES** | |
| Voice Cards (32) | |
| Blank Cards (8) | |
| Card Album | |
| Power Cord | |

GS2

**WARNING:** TO REDUCE THE RISK OF FIRE OR ELECTRIC SHOCK, DO NOT EXPOSE THIS APPLIANCE TO RAIN OR MOISTURE. THERE ARE NO USER-SERVICEABLE PARTS INSIDE. REFER SERVICING TO A QUALIFIED SERVICE PERSONNEL.

**SERVICE**

The GS1 and GS2 are supported by Yamaha's worldwide network of factory trained and qualified and qualified dealer service personnel. In the event of a problem, contact your nearest Yamaha dealer.

SINCE 1887

YAMAHA

NIPPON GAKKI CO., LTD. HAMAMATSU, JAPAN

OMD-34 8161 Printed in Japan