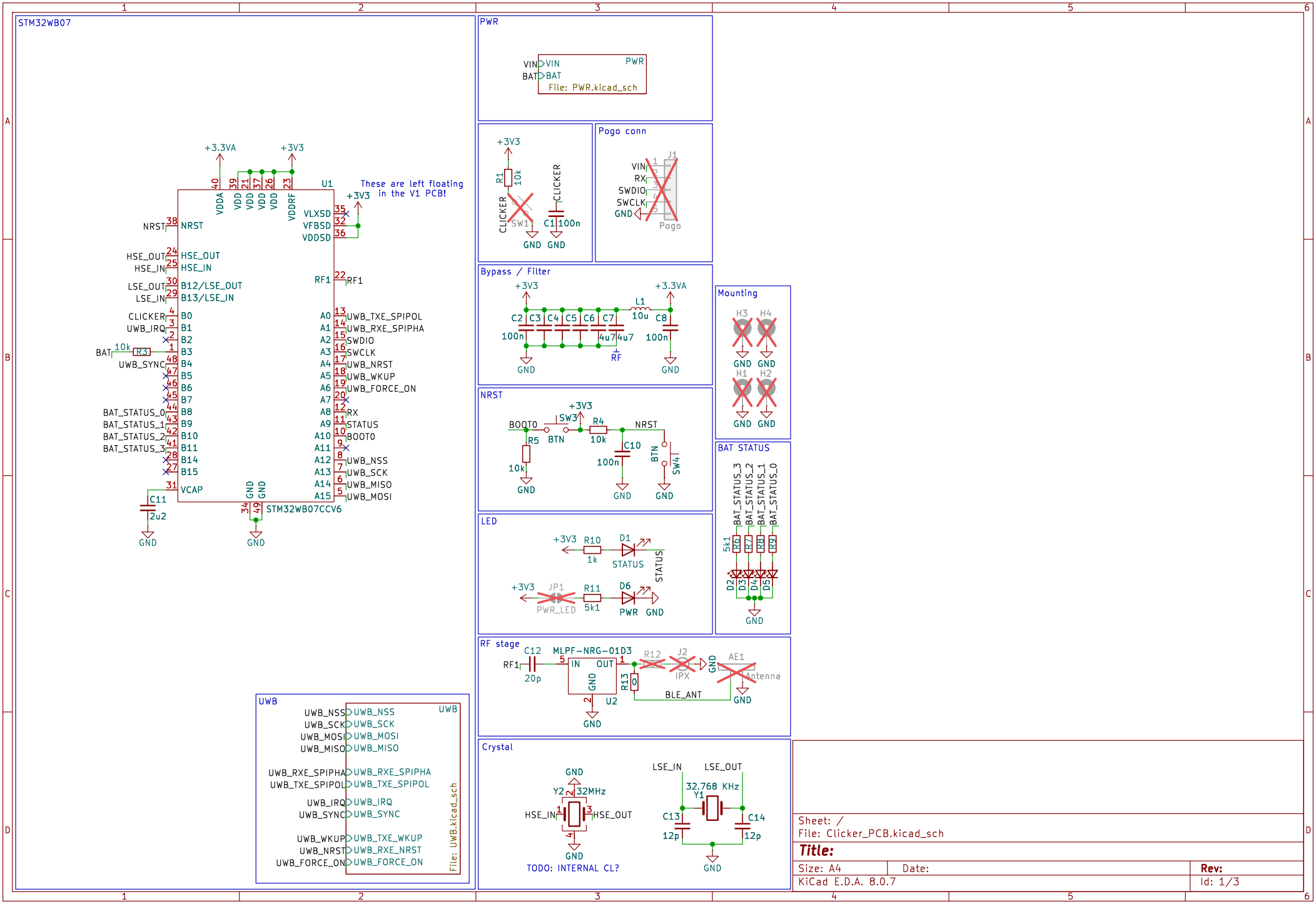
STM32WB07
U1
STM32WB07CCV6
+3.3VA
+3V3
These are left floating in the V1 PCB!
NRST
HSE_OUT
HSE_IN
LSE_OUT
LSE_IN
CLICKER
UWB_IRQ
BAT
R31
10k
UWB_SYNC
BAT_STATUS_0
BAT_STATUS_1
BAT_STATUS_2
BAT_STATUS_3
VCAP
C11
2u2
GND
VDDA
VDD
VDDRF
VLXSD
VFBSD
VDDSD
RF1
UWB_TXE_SPIPOL
UWB_RXE_SPIPHA
SWDIO
SWCLK
UWB_NRST
UWB_WKUP
UWB_FORCE_ON
RX
STATUS
BOOT0
UWB_NSS
UWB_SCK
UWB_MISO
UWB_MOSI
PWR
VIN
BAT
File: PWR.kicad_sch
R1
10k
CLICKER
SW1
C1 100n
Pogo conn
J1
VIN
RX
SWDIO
SWCLK
GND
Pogo
Bypass / Filter
C2 C3 C4 C5 C6 C7
100n
4u7 4u7
RF
L1
10u
C8
100n
Mounting
H3 H4
H1 H2
NRST
BOOT0
SW3
BTN
R4
10k
R5
10k
C10
100n
SW4
LED
R10
1k
D1
STATUS
JP1
PWR_LED
R11
5k1
D6
PWR
BAT STATUS
BAT_STATUS_3
BAT_STATUS_2
BAT_STATUS_1
BAT_STATUS_0
5k1
R6 R7 R8 R9
D2 D3 D4 D5
RF stage
C12
20p
MLPF-NRG-01D3
IN
OUT
U2
R12
J2
IPX
AE1
Antenna
R13
0
BLE_ANT
Crystal
Y2
32MHz
HSE_IN
HSE_OUT
TODO: INTERNAL CL?
LSE_IN
LSE_OUT
32.768 KHz
Y1
C13
12p
C14
12p
UWB
UWB_NSS
UWB_SCK
UWB_MOSI
UWB_MISO
UWB_RXE_SPIPHA
UWB_TXE_SPIPOL
UWB_IRQ
UWB_SYNC
UWB_WKUP
UWB_NRST
UWB_FORCE_ON
File: UWB.kicad_sch
Sheet: /
File: Clicker_PCB.kicad_sch
Title:
Size: A4
Date:
Rev:
KiCad E.D.A. 8.0.7
Id: 1/3

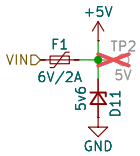

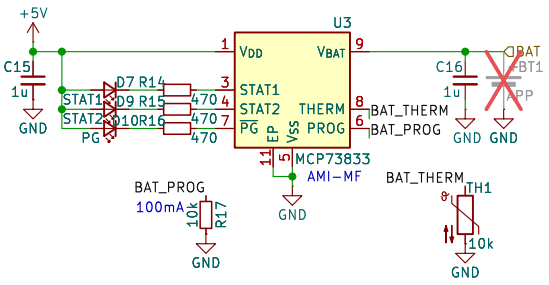

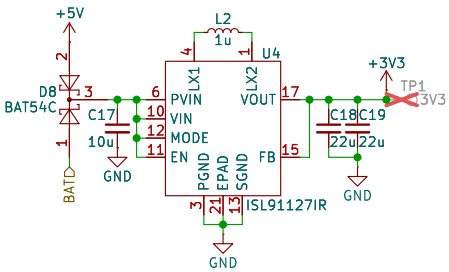

Sheet: /PWR/
File: PWR.kicad_sch

Title:

Size: A4	Date:	Rev:
KiCad E.D.A. 8.0.7		Id: 2/3

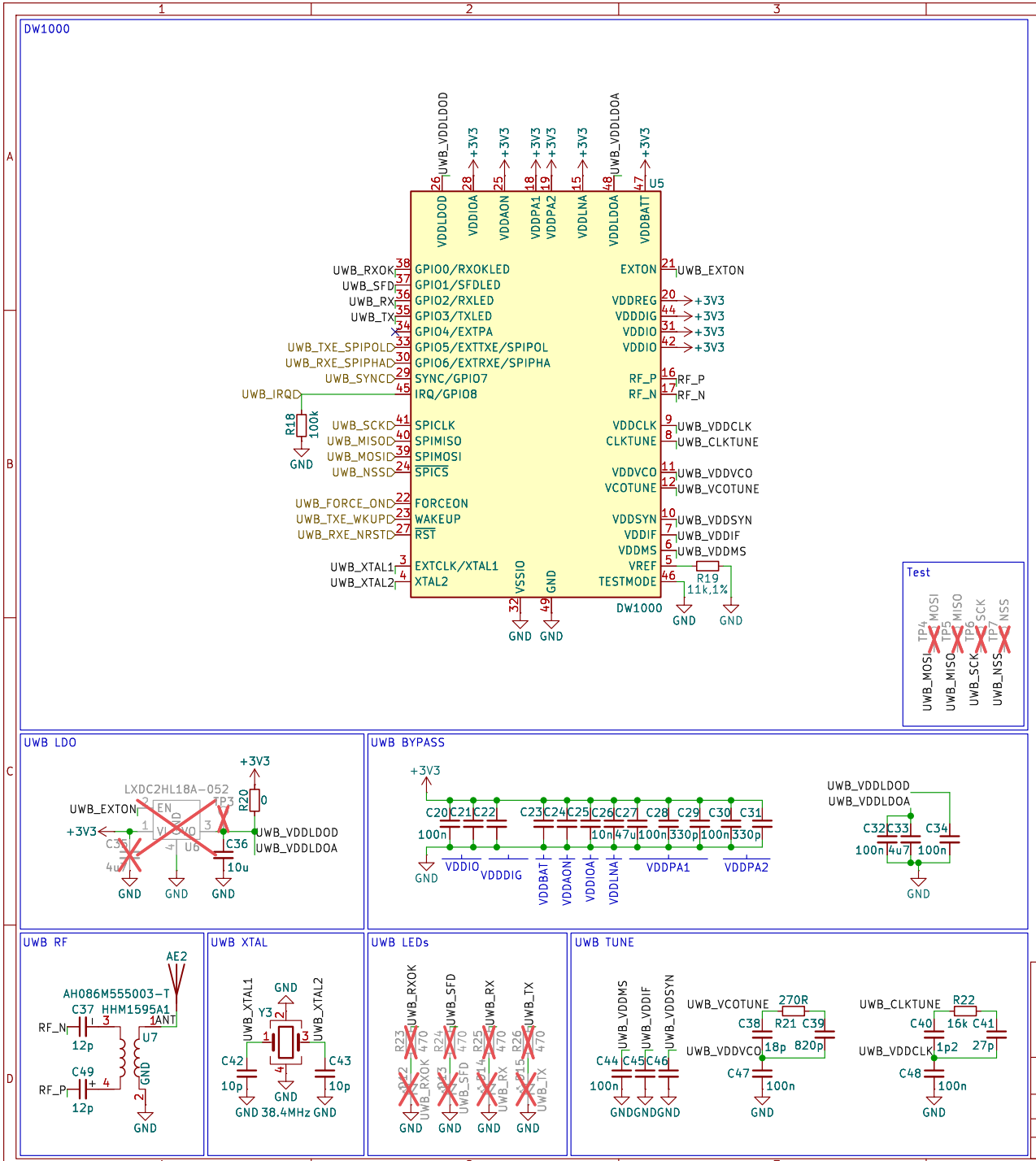

Sheet: /UWB/
File: UWB.kicad_sch

Title:

Size: A4	Date:	Rev:
KiCad E.D.A. 8.0.7		Id: 3/3