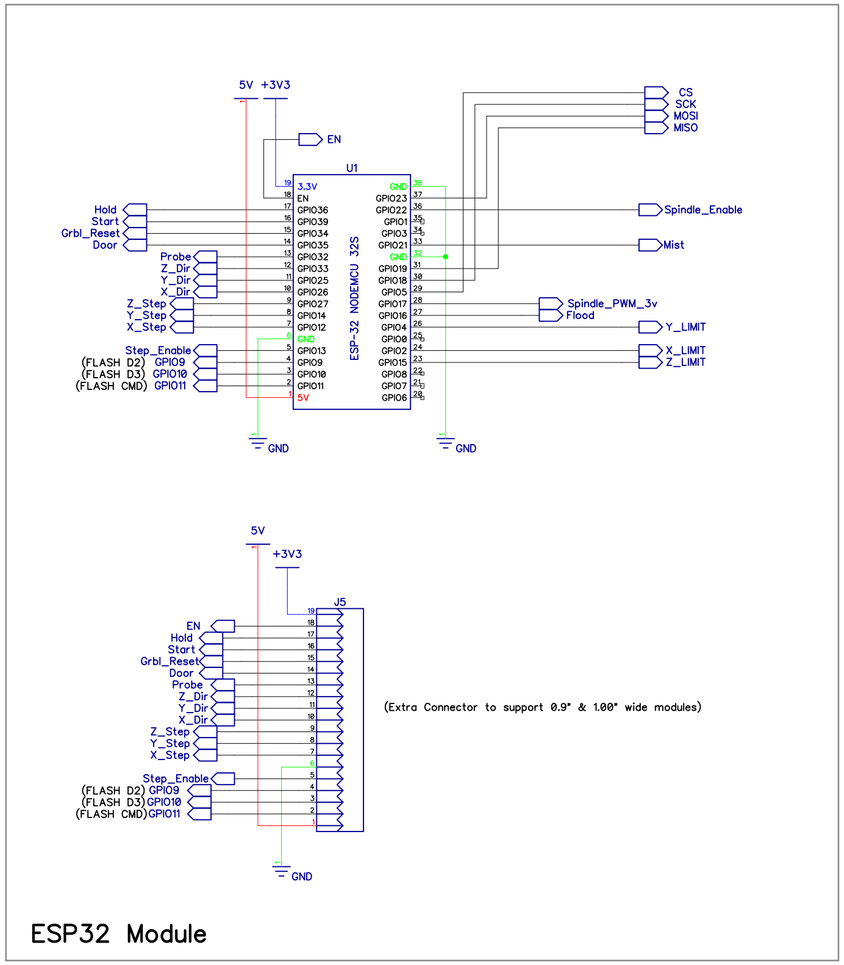

ESP32 Module

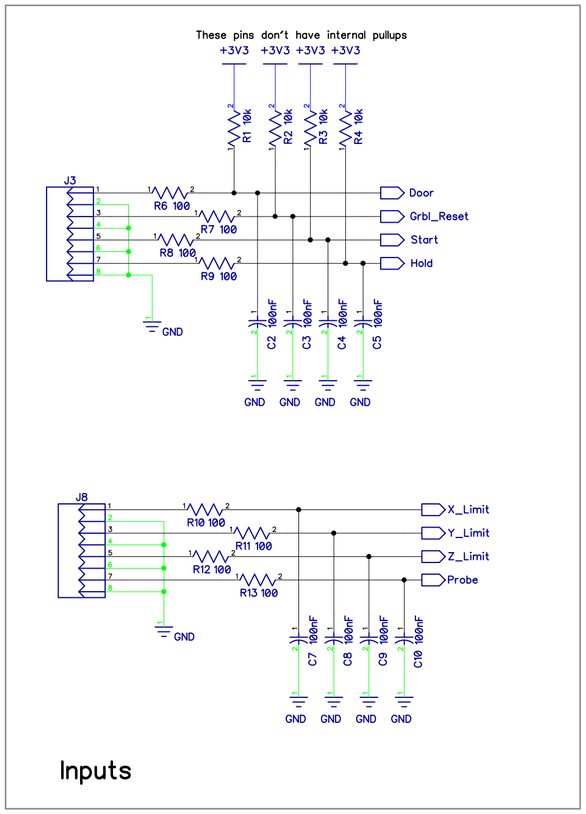

Inputs

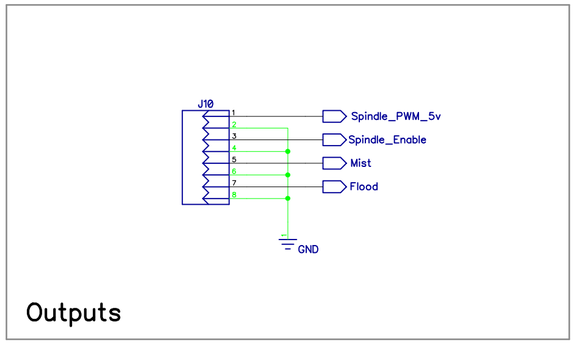

Outputs

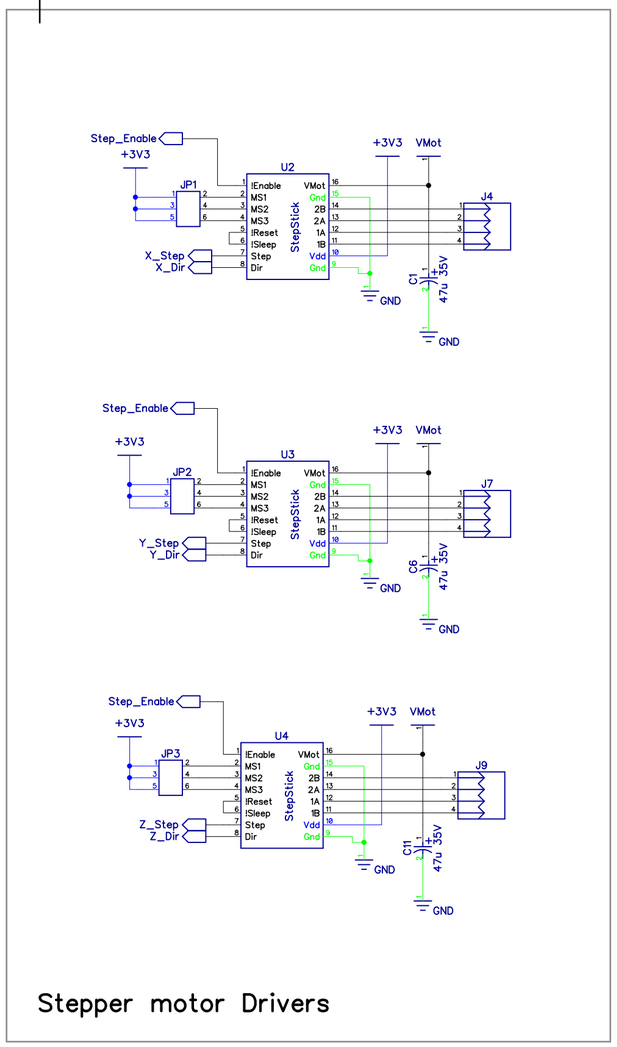

Stepper motor Drivers

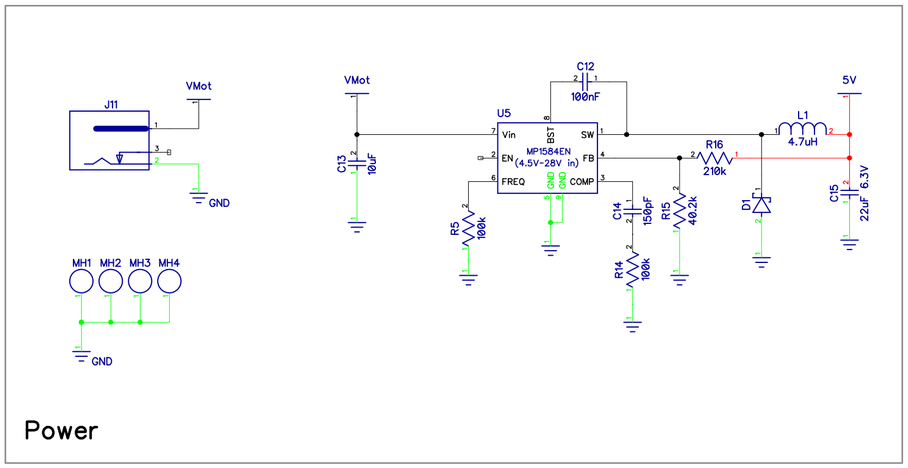

Power

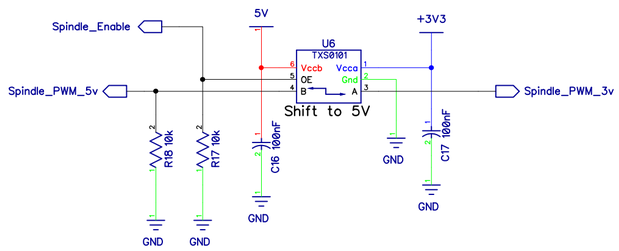

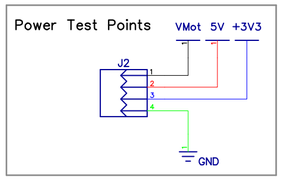

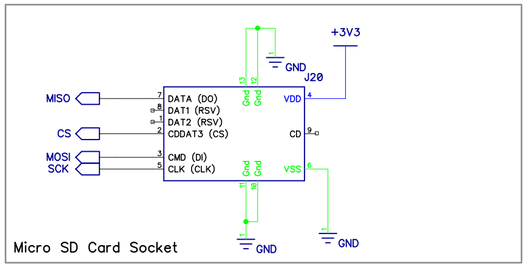

Micro SD Card Socket

REVISIONS				
ZONE	REV	DESCRIPTION	DATE	APPROVED

ESP32 CNC Test PCB V3.5

A Test PCB for Grbl-ESP32

Buildlog.net	SIZE	FSCM NO.	DWG NO.	REV 3.1
	SCALE		Sheet 1	