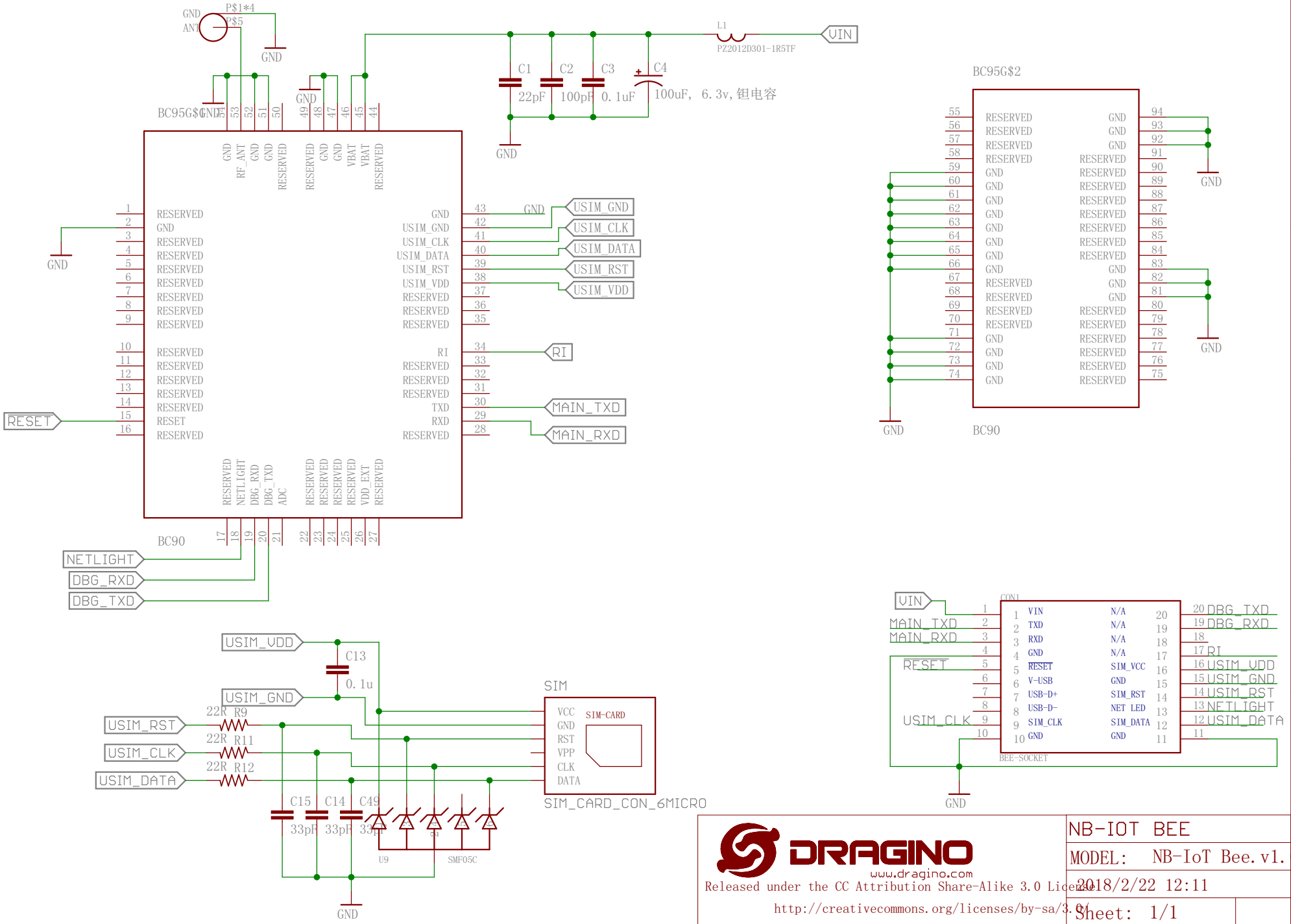

DRAGINO
www.dragino.com
Released under the CC Attribution Share-Alike 3.0 License
http://creativecommons.org/licenses/by-sa/3.0/

NB-IOT BEE

MODEL: NB-IoT Bee.v1.0

2018/2/22 12:11

Sheet: 1/1