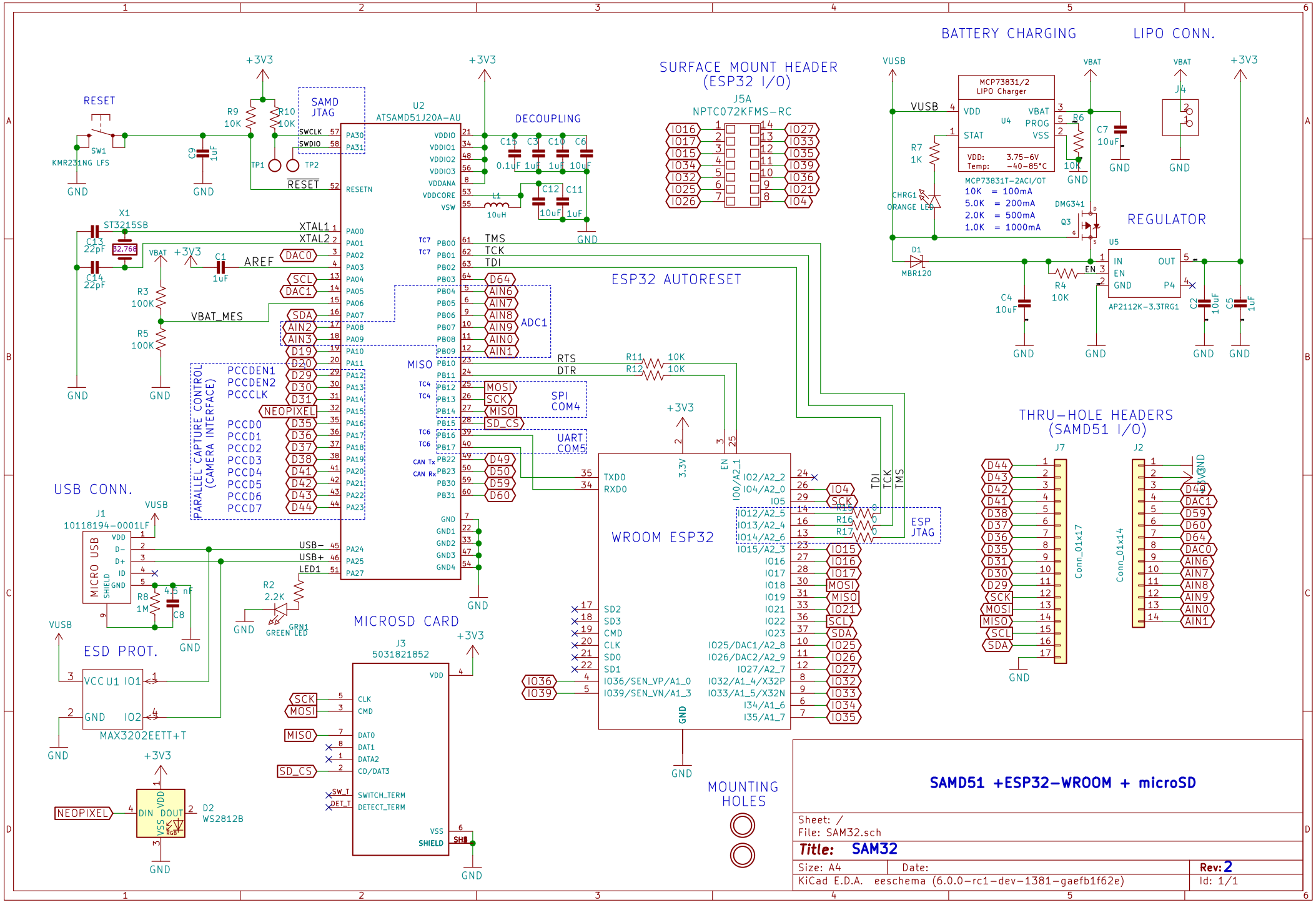
BATTERY CHARGING
LIPO CONN.
SURFACE MOUNT HEADER (ESP32 I/O)
J5A
NPTC072KFMS-RC
RESET
SAMD JTAG
U2
ATSAMD51J20A-AU
DECOUPLING
MCP73831/2 LIPO Charger
U4
VDD
VBAT
PROG
VSS
STAT
VDD: 3.75-6V
Temp: -40-85°C
MCP73831T-2ACI/OT
10K = 100mA
5.0K = 200mA
2.0K = 500mA
1.0K = 1000mA
CHRG1
ORANGE LED
DMG341
Q3
MBR120
REGULATOR
U5
IN
EN
GND
OUT
P4
AP2112K-3.3TRG1
ESP32 AUTORESET
PARALLEL CAPTURE CONTROL (CAMERA INTERFACE)
PCCDEN1
PCCDEN2
PCCCLK
PCCD0
PCCD1
PCCD2
PCCD3
PCCD4
PCCD5
PCCD6
PCCD7
ADC1
SPI COM4
UART COM5
ESP JTAG
WROOM ESP32
USB CONN.
J1
10118194-0001LF
MICRO USB
ESD PROT.
MAX3202EETT+T
MICROSD CARD
J3
5031821852
NEOPIXEL
D2
WS2812B
MOUNTING HOLES
THRU-HOLE HEADERS (SAMD51 I/O)
J7
J2
Conn_01x17
Conn_01x14
SAMD51 +ESP32-WROOM + microSD
Sheet: /
File: SAM32.sch
Title: SAM32
Size: A4
Date:
Rev: 2
KiCad E.D.A. eeschema (6.0.0-rc1-dev-1381-gaefb1f62e)
Id: 1/1