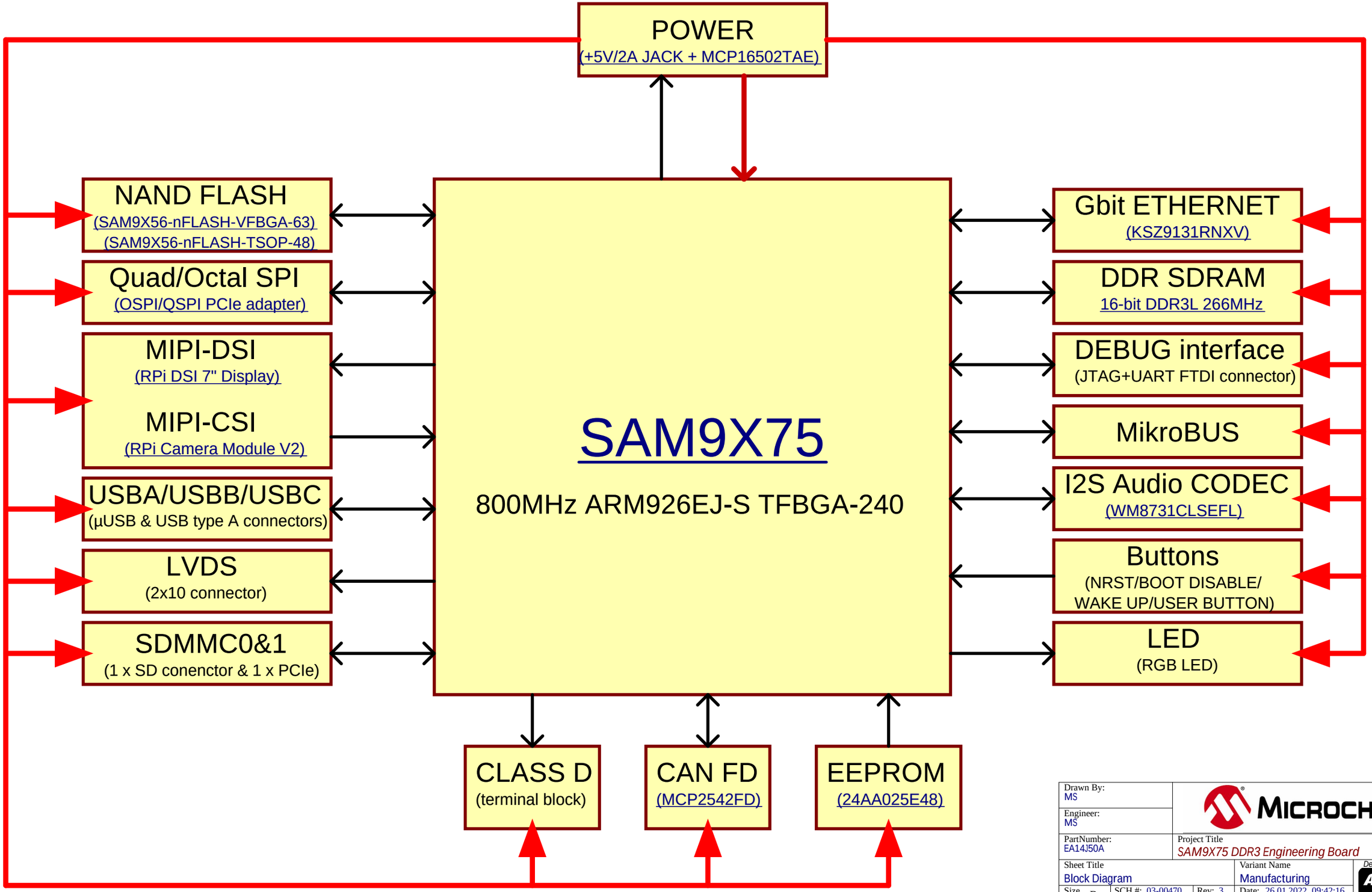

Drawn By: MS			MICROCHIP
Engineer: MS			
PartNumber: EA14J50A		Project Title: SAM9X75 DDR3 Engineering Board	
Sheet Title: Block Diagram		Variant Name: Manufacturing	Designed with Altium
Size B	SCH #: 03-00470 Rev: 3	Date: 26.01.2022 09:42:16	Altium.com
	PCB #: 04-11575 Rev: 3	Sheet 1 of 14	
File: 00 - Block-Diagram.SchDoc			

SAM9X75 MPU PIO USAGE

PIOA	USAGE	SHARED WITH	PIOB	USAGE	SHARED WITH	PIOC	USAGE	SHARED WITH	PIOD	USAGE	SHARED WITH
PA0	SDMMC0_DAT0		PB0	ETH_RX2		PC0	FLEXCOM7_IO0		PD0	NAND_OE	
PA1	SDMMC0_CMD		PB1	ETH_RX3		PC1	FLEXCOM7_IO1		PD1	NAND_WE	
PA2	SDMMC0_CK		PB2	ETH_125CK		PC2	LVDS_D0_N		PD2	NAND_ALE	
PA3	SDMMC0_DAT1		PB3	ETH_RXCTL		PC3	LVDS_D0_P		PD3	NAND_CLE	
PA4	SDMMC0_DAT2		PB4	ETH_TX2		PC4	LVDS_D1_N		PD4	NAND_CS	
PA5	SDMMC0_DAT3		PB5	ETH_TX3		PC5	LVDS_D1_P		PD5	ETH_INT	
PA6	SDMMC1_DAT1		PB6	ETH_TXCK		PC6	LVDS_D2_N		PD6	NAND_D0	
PA7	SDMMC1_DAT2		PB7	ETH_TXEN		PC7	LVDS_D2_P		PD7	NAND_D1	
PA8	SDMMC1_DAT3		PB8	ETH_RXCK		PC8	MIKROBUS_TX		PD8	NAND_D2	
PA9	SDMMC1_DAT0		PB9	ETH_MDIO		PC9	MIKROBUS_RX		PD9	NAND_D3	
PA10	SDMMC1_CMD		PB10	ETH_MDC		PC10	LVDS_CLK_N		PD10	NAND_D4	
PA11	SDMMC1_CK		PB11	ETH_RX0		PC11	LVDS_CLK_P		PD11	NAND_D5	
PA12	SDMMC0_PWCYCLE	DISABLE_BOOT	PB12	ETH_RX1		PC12	LVDS_D3_N		PD12	NAND_D6	
PA13	SDMMC0_CD		PB13	ETH_TX0		PC13	LVDS_D3_P		PD13	NAND_D7	
PA14	MIKROBUS_CS		PB14	ETH_TX1		PC14	MIPI_GPIO0		PD14	NAND_RDY	
PA15	CLASSD_R0	MIKROBUS_MISO	PB15	QSPI0_IO5	I2SMCC_WS	PC15	MIPI_GPIO1		PD15		
PA16	CLASSD_R1	MIKROBUS_MOSI	PB16	QSPI0_IO6	I2SMCC_DIN0	PC16	FLEXCOM10_IO0		PD16		
PA17	CLASSD_R2	MIKROBUS_SPCK	PB17	QSPI0_IO7	I2SMCC_DOUT0	PC17	FLEXCOM10_IO1		PD17		
PA18	CLASSD_L0		PB18	QSPI0_DQS		PC18	MCP16502_INT		PD18		
PA19	CLASSD_L1		PB19	QSPI0_SCK		PC19	LED_RED		PD19		
PA20	CLASSD_L2		PB20	QSPI0_CS		PC20	LED_BLUE		PD20		
PA21	CLASSD_L3		PB21	QSPI0_IO0		PC21	LED_GREEN	MIKROBUS_PWM	PD21		
PA22	CLASSD_R3		PB22	QSPI0_IO1		PC22	DBGU_TXD		PD22		
PA23	SDMMC1_CD		PB23	QSPI0_IO2		PC23	DBGU_RXD		PD23		
PA24	CAN0_STBY		PB24	QSPI0_IO3		PC24	USER_BUTTON		PD24		
PA25	SDMMC1_PWCYCLE		PB25	QSPI0_INT	I2SMCC_MCK	PC25	NRST_OUT		PD25		
PA26	DBGU_RXD	CAN0_RX	PB26	QSPI0_IO4	I2SMCC_CK	PC26	USBA_VBUSDETECT		PD26		
PA27	DBGU_TXD	CAN0_TX	PB27			PC27	USBB_EN_5V		PD27		
PA28	CAN1_TX		PB28			PC28	USBB_OVERCUR		PD28		
PA29	CAN1_RX		PB29			PC29	USBC_EN_5V		PD29		
PA30	MIKROBUS_AN		PB30			PC30	USBC_OVERCUR		PD30		
PA31	CAN1_STBY		PB31			PC31	MIKROBUS_INT		PD31		

FIDUCIAL ROUND PCB 1mm SMD

FD1
FD2
FD3
FD4

PAD1 D16.51H10.16
PAD2 D16.51H10.16
PAD3 D16.51H10.16
PAD4 D16.51H10.16
PAD5 D16.51H10.16
PAD6 D16.51H10.16

CBL1

USB Male-A to Male Micro-B

LABEL1

02- -R1
JIT

LABEL Need Help Small

Drawn By: MS	MICROCHIP
Engineer: MS	
PartNumber: EA14J50A	Project Title: SAM9X75 DDR3 Engineering Board
Sheet Title: MPU PIO Usage	Variant Name: Manufacturing
Size B	SCH #: 03-00470 Rev: 3 Date: 26.01.2022 09:42:16
	PCB #: 04-11575 Rev: 3 Sheet 2 of 14
File: 01 - SAM9X75-PIO-Usage.SchDoc	Designed with Altium Altium.com

PIO BANK A

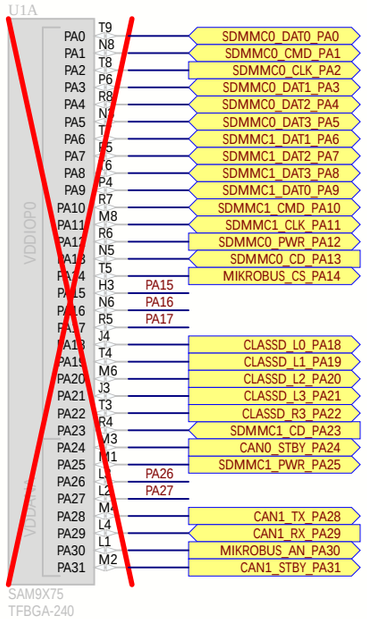

PIO BANK B

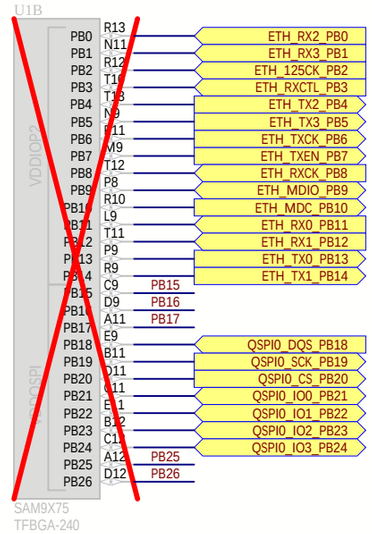

PIO BANK C

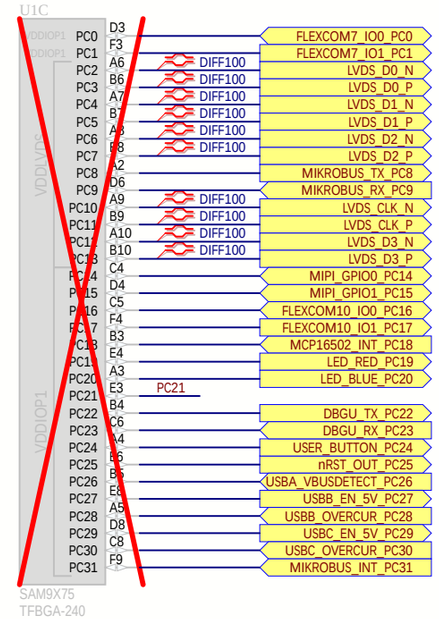

PIO BANK D

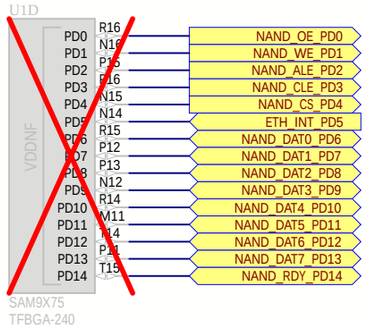

MPU BUS DISTRIBUTION

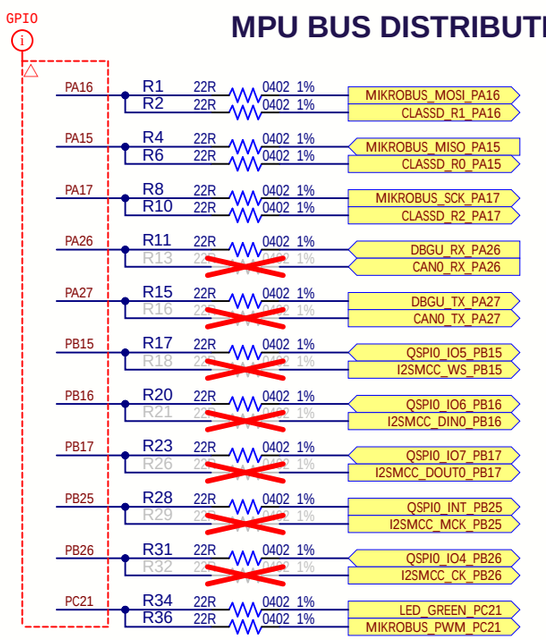

TWI BUS DISTRIBUTION

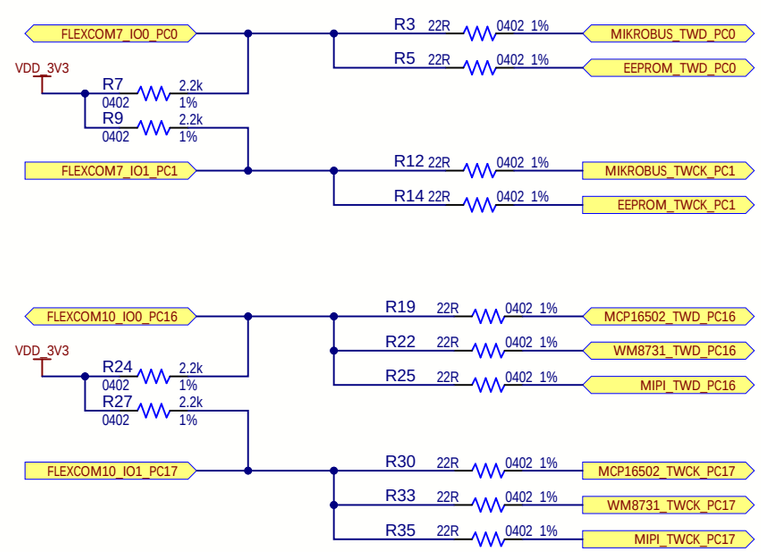

Drawn By: MS			
Engineer: MS			
PartNumber: EA14J50A	Project Title: SAM9X75 DDR3 Engineering Board		
Sheet Title: SAM9X75 MPU		Variant Name: Manufacturing	Designed with Altium
Size B	SCH #: 03-00470 Rev: 3	Date: 26.01.2022 09:42:16	Altium.com
	PCB #: 04-11575 Rev: 3	Sheet 3 of 14	
File: 02 - SAM9X75-PIO.SchDoc			

MPU CLK, MIPI, USB

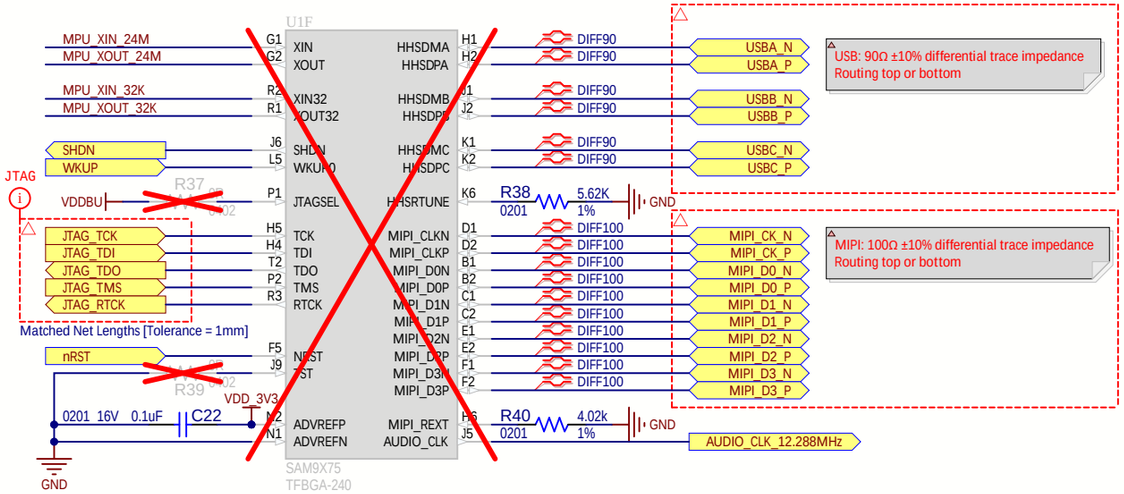

MPU POWER SUPPLIES

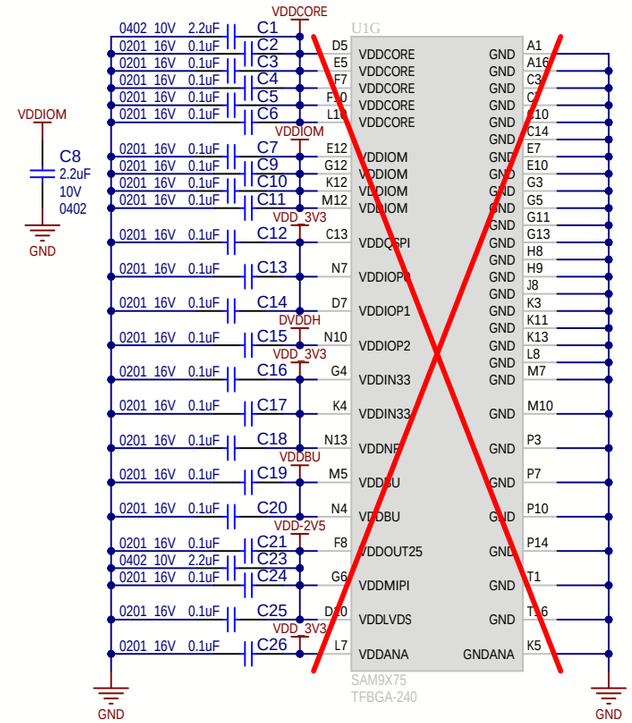

SAM9X75 BGA SOCKET 16 x 16

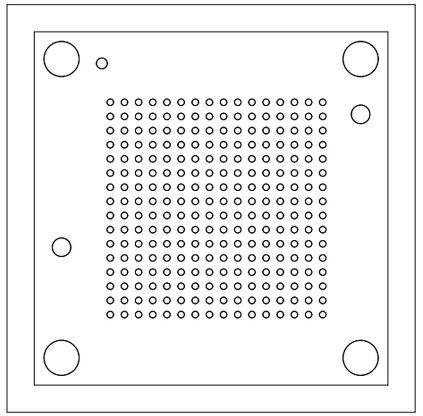

32KHz clock

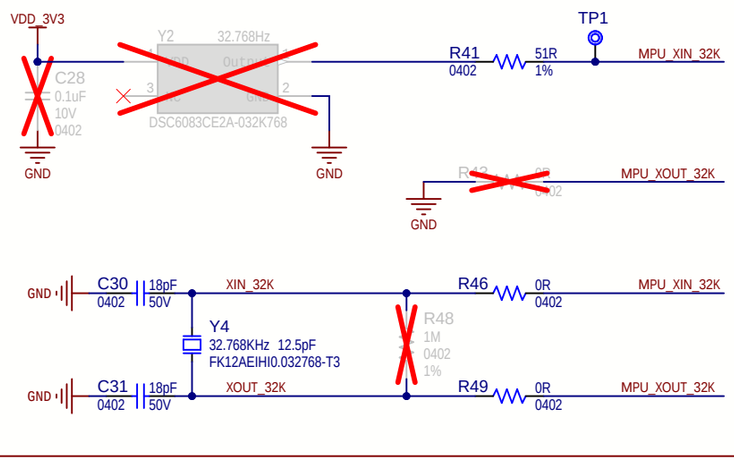

24MHz clock

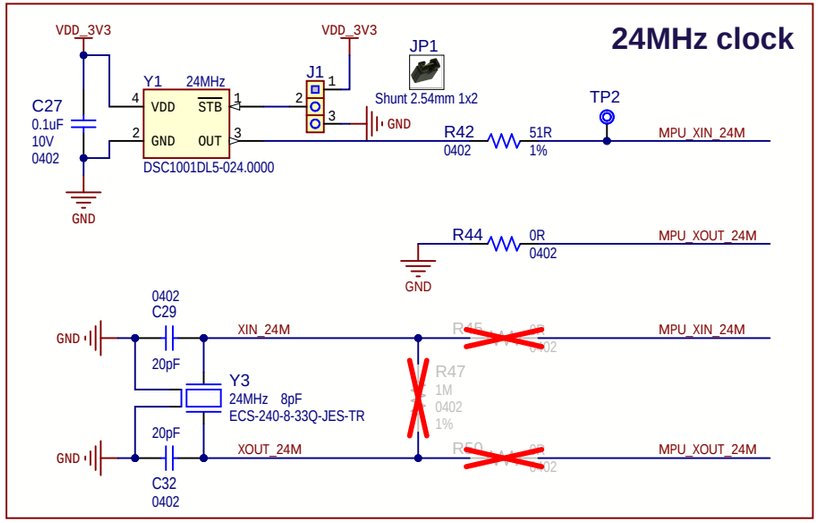

Drawn By: MS			
Engineer: MS			
PartNumber: EA14J50A	Project Title: SAM9X75 DDR3 Engineering Board		
Sheet Title: SAM9X75 MPU		Variant Name: Manufacturing	Designed with Altium
Size B	SCH #: 03-00470	Rev: 3	Date: 26.01.2022 09:42:17
	PCB #: 04-11575	Rev: 3	Sheet 4 of 14
File: 03 - SAM9X75-SYS.SchDoc			Altium.com

SAM9X75 DDR3-533 16-bit Controller

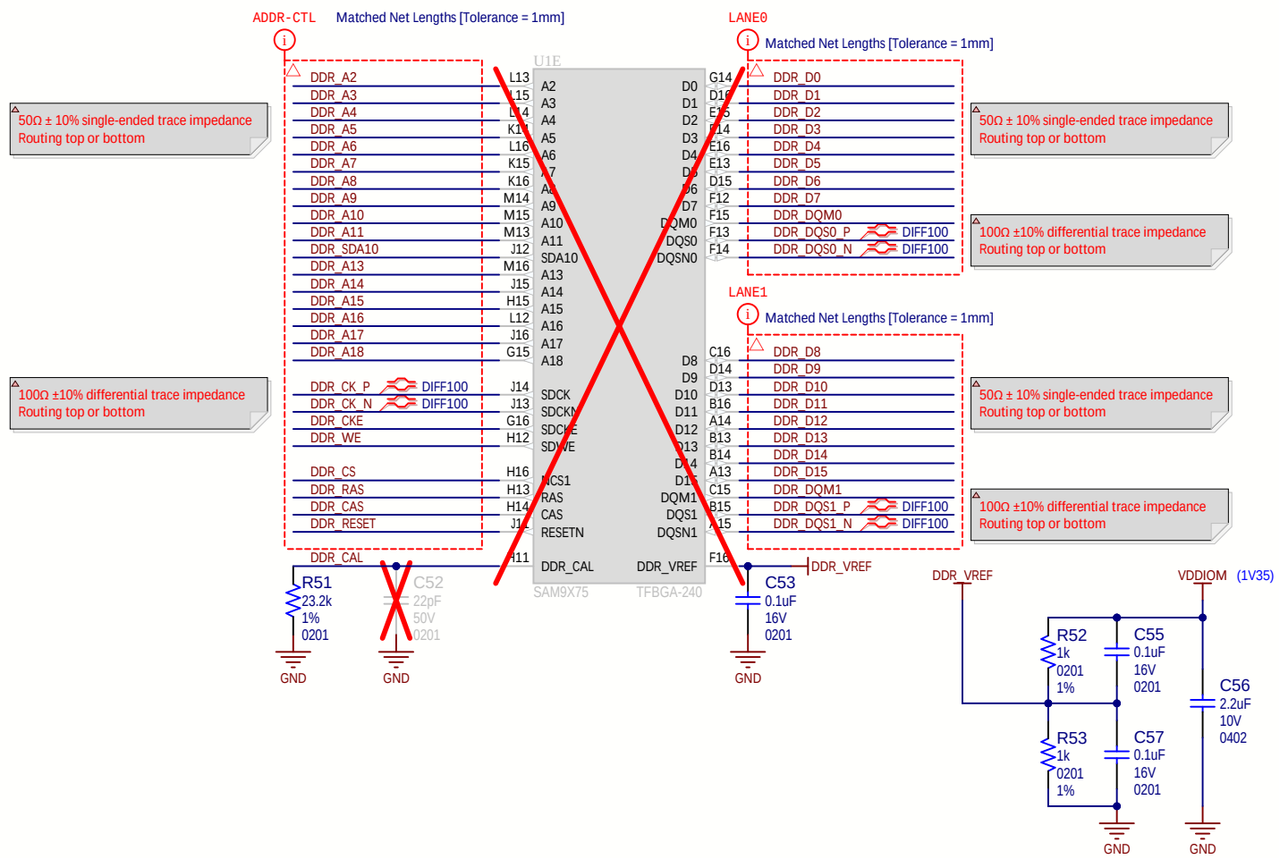

2Gb DDR3L-1600 16-bit SDRAM

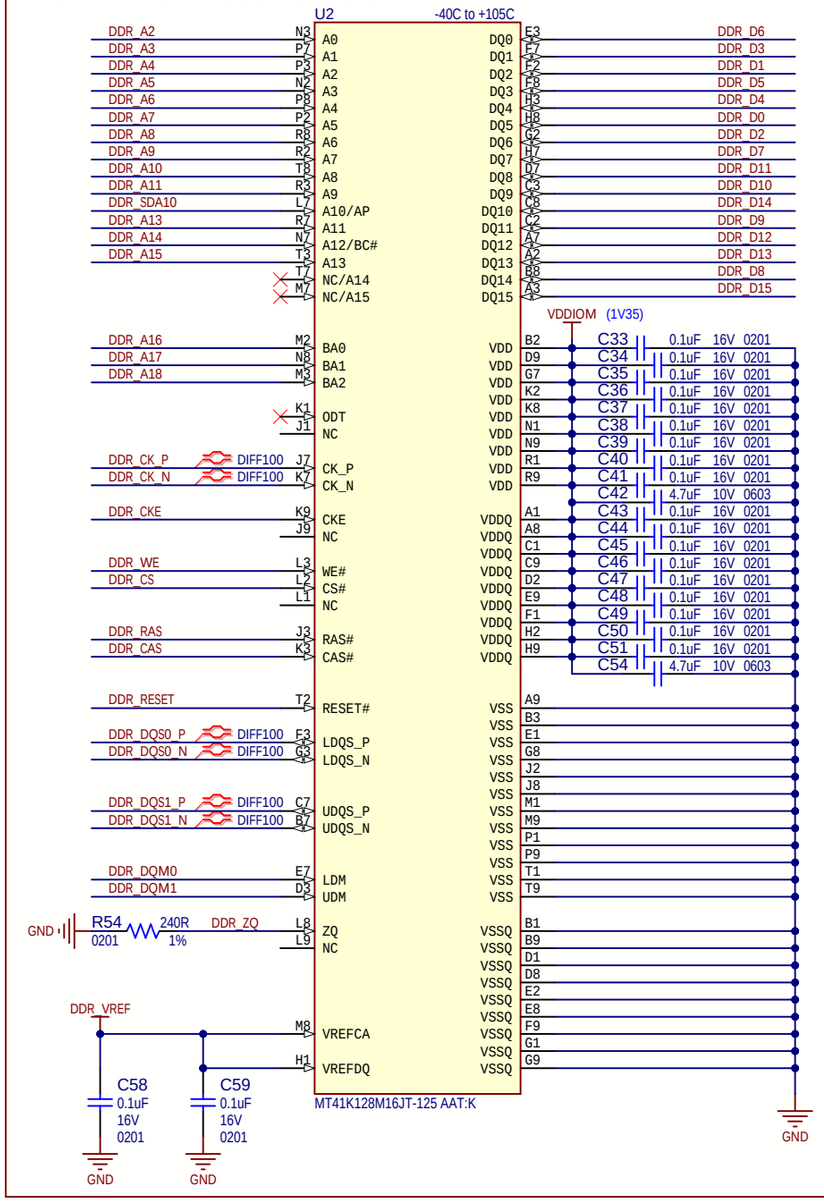

DDR TEST POINTS

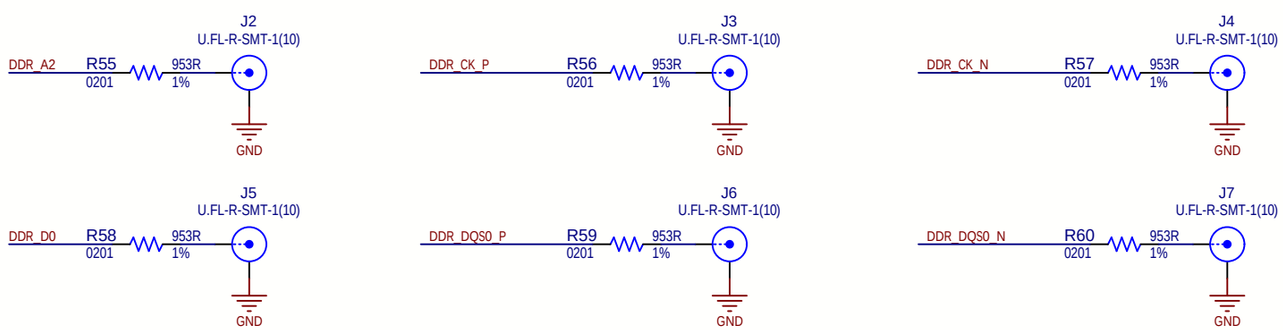

Drawn By: MS			
Engineer: MS			
PartNumber: EA14J50A	Project Title: SAM9X75 DDR3 Engineering Board		
Sheet Title: SAM9X75 DDR3		Variant Name: Manufacturing	Designed with Altium
Size B	SCH #: 03-00470	Rev: 3	Date: 26.01.2022 09:42:17
	PCB #: 04-11575	Rev: 3	Sheet 5 of 14
File: 04 - SAM9X75-DDR3.SchDoc			Altium.com

SD CARD INTERFACE - SDMMC0

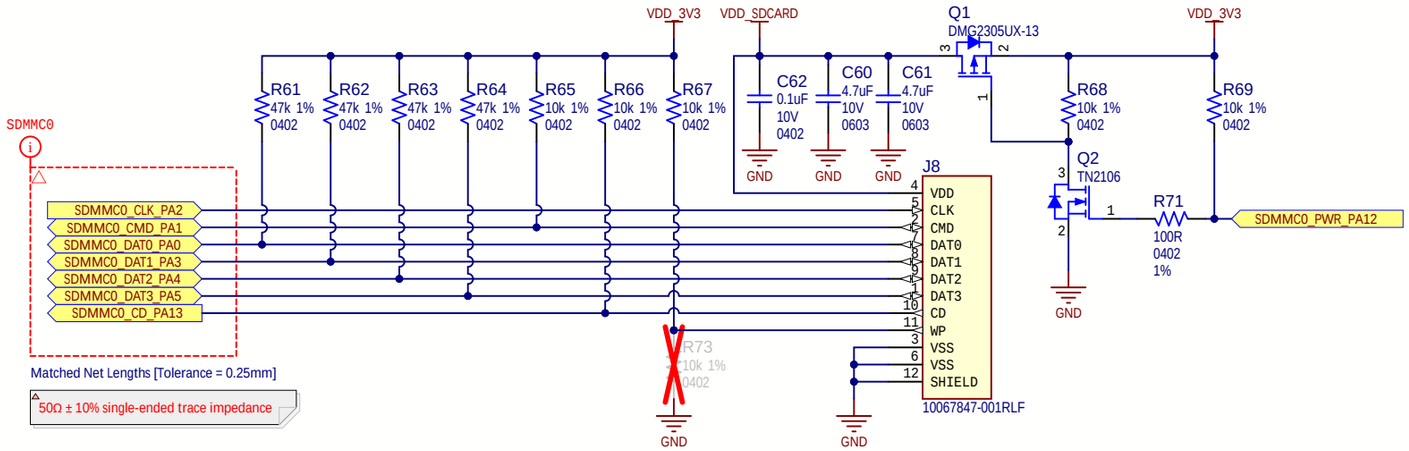

NAND-Flash Interface

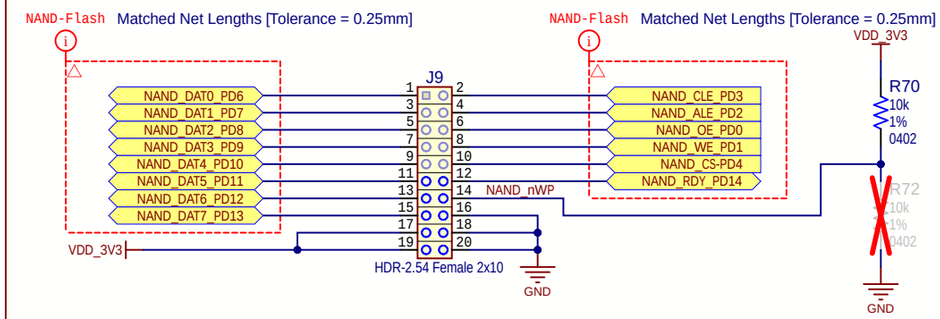

eMMC INTERFACE - SDMMC1

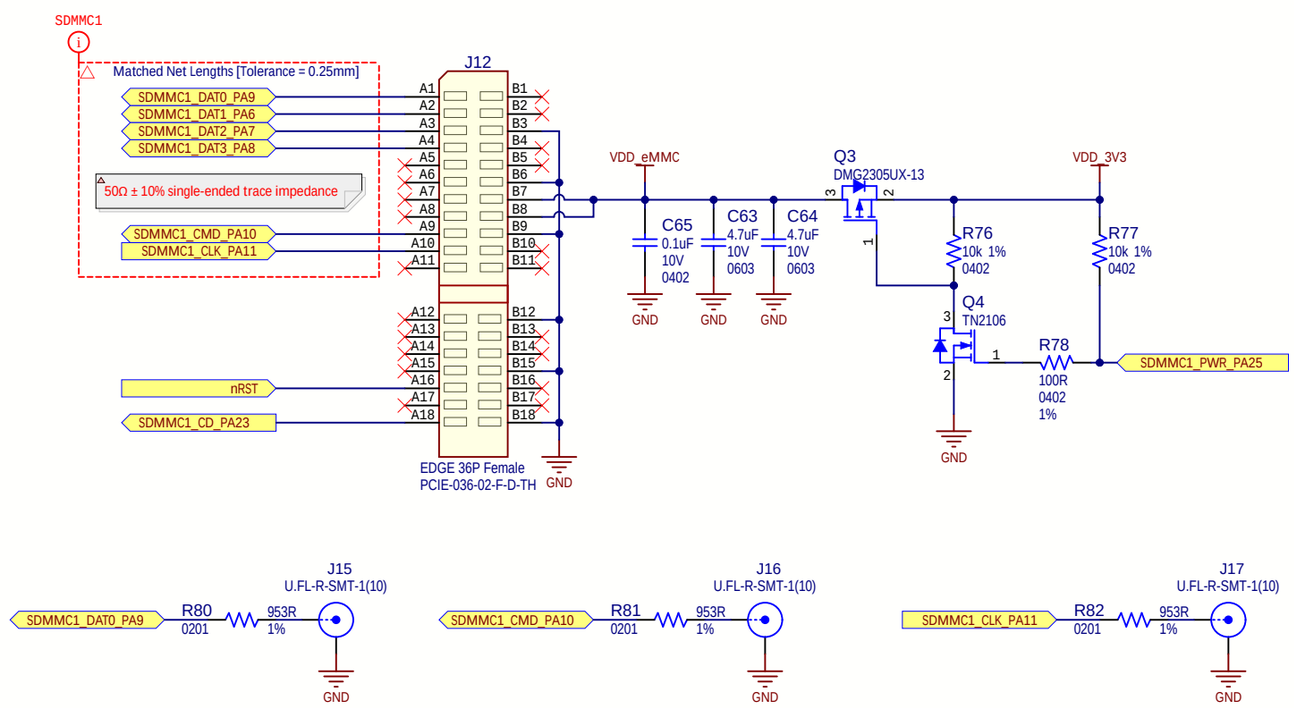

Octal / Quad SPI

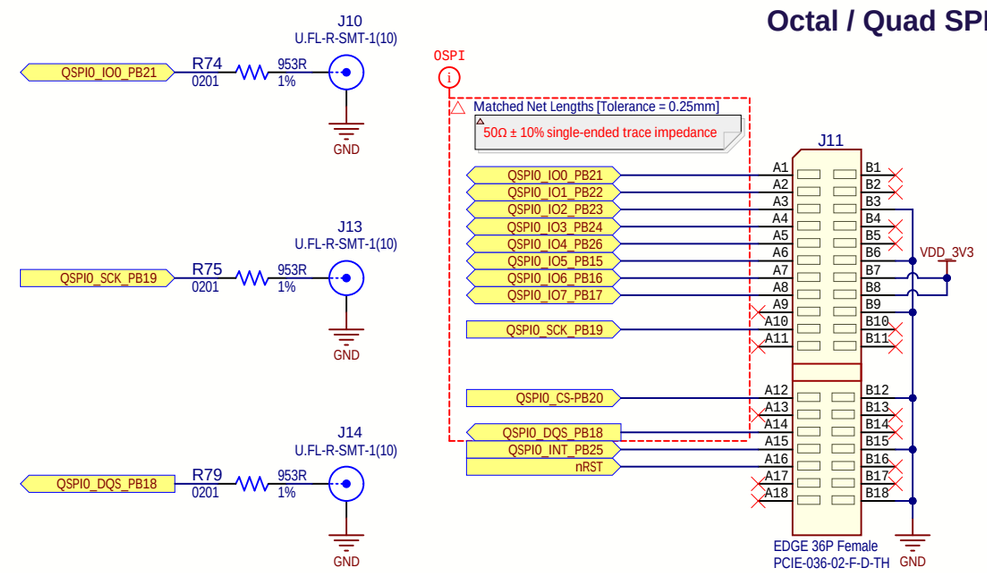

Drawn By: MS			MICROCHIP
Engineer: MS			
PartNumber: EA14J50A			Project Title: *SAM9X75 DDR3 Engineering Board*
Sheet Title: NAND, QSPI, SDMMC		Variant Name: Manufacturing	Designed with Altium
Size: B	SCH #: 03-00470 Rev: 3	Date: 26.01.2022 09:42:17	Altium.com
	PCB #: 04-11575 Rev: 3	Sheet 6 of 14	
File: 05 - NAND-QSPI-SDMMC.SchDoc			

GMAC - Gigabit Ethernet

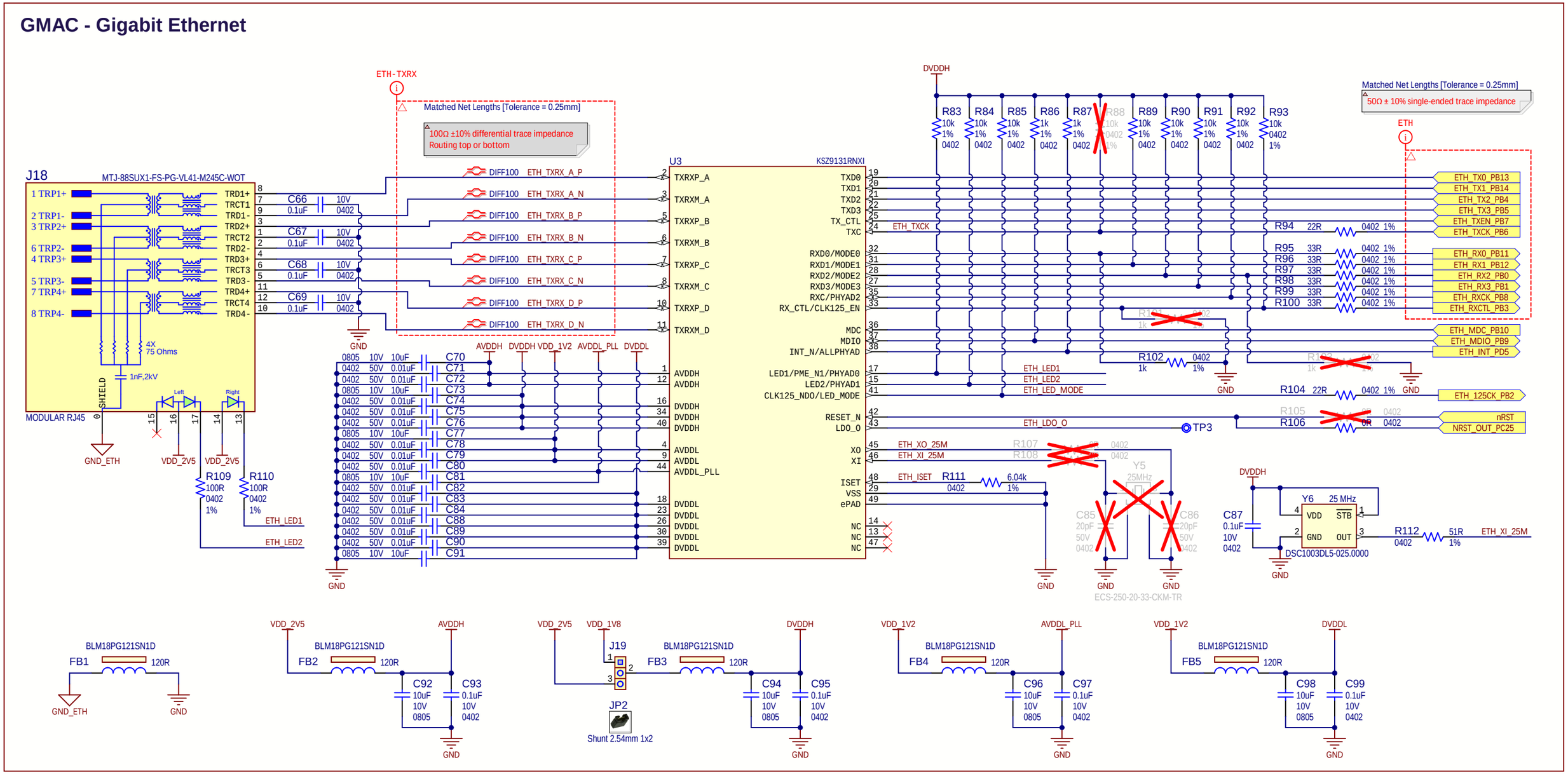

ETH TEST POINTS

Drawn By: MS	MICROCHIP
Engineer: MS	
PartNumber: EA14J50A	Project Title: SAM9X75 DDR3 Engineering Board
Sheet Title: Gigabit Ethernet PHY	Variant Name: Manufacturing
Size: B	SCH #: 03-00470 Rev: 3 · PCB #: 04-11575 Rev: 3 · Date: 26.01.2022 09:42:17 · Sheet 7 of 14
File: 06 - Ethernet.SchDoc	Designed with Altium — Altium.com

AUDIO CODEC

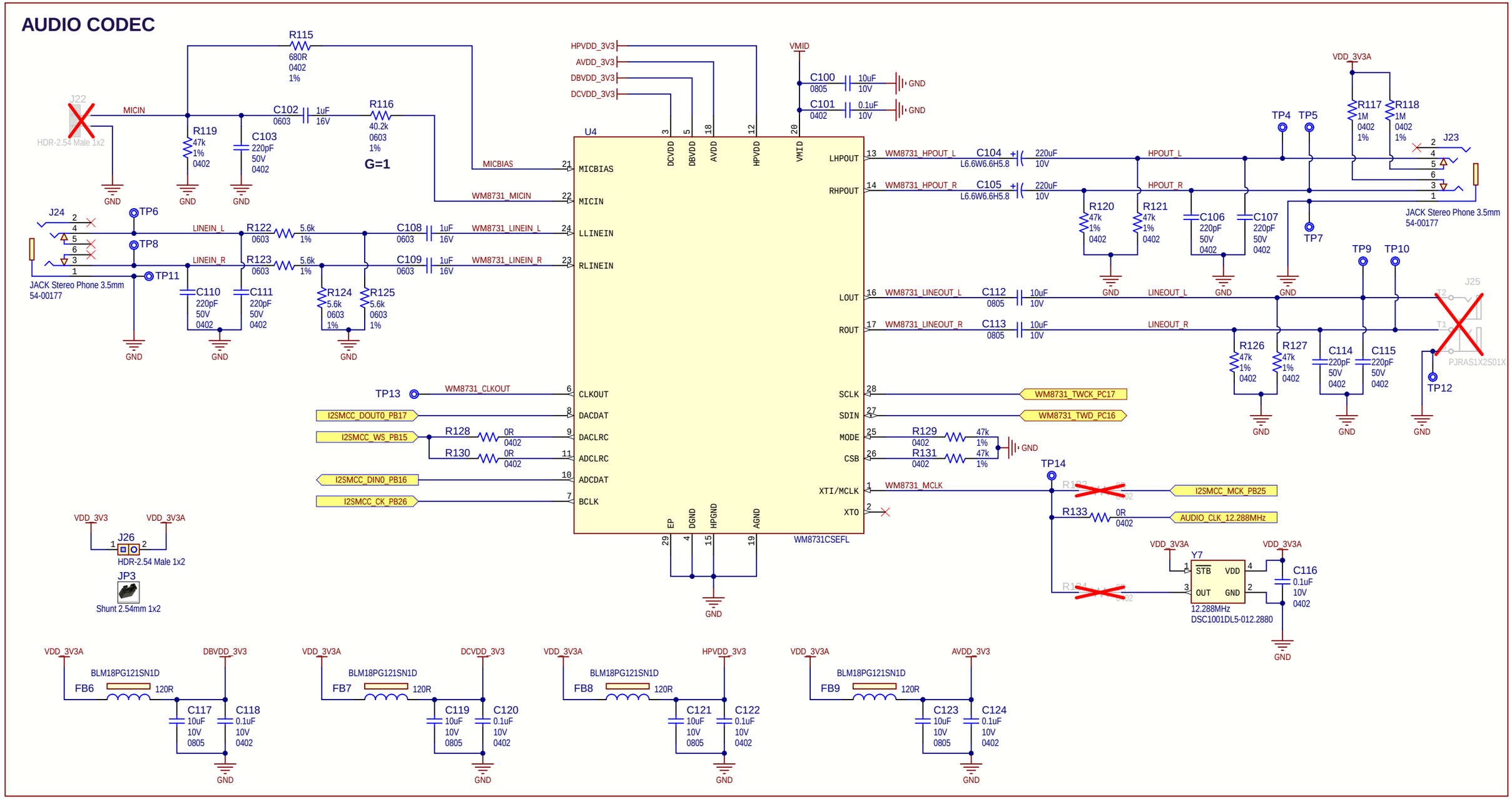

Drawn By: MS	MICROCHIP
Engineer: MS	
PartNumber: EA14J50A	Project Title: SAM9X75 DDR3 Engineering Board
Sheet Title: Audio Codec WM8731	Variant Name: Manufacturing
Size B	SCH #: 03-00470 Rev: 3 / PCB #: 04-11575 Rev: 3
Date: 26.01.2022 09:42:17	Sheet 8 of 14
File: 07 - Audio-Codec.SchDoc	Designed with Altium — Altium.com

AUDIO CLASS-D

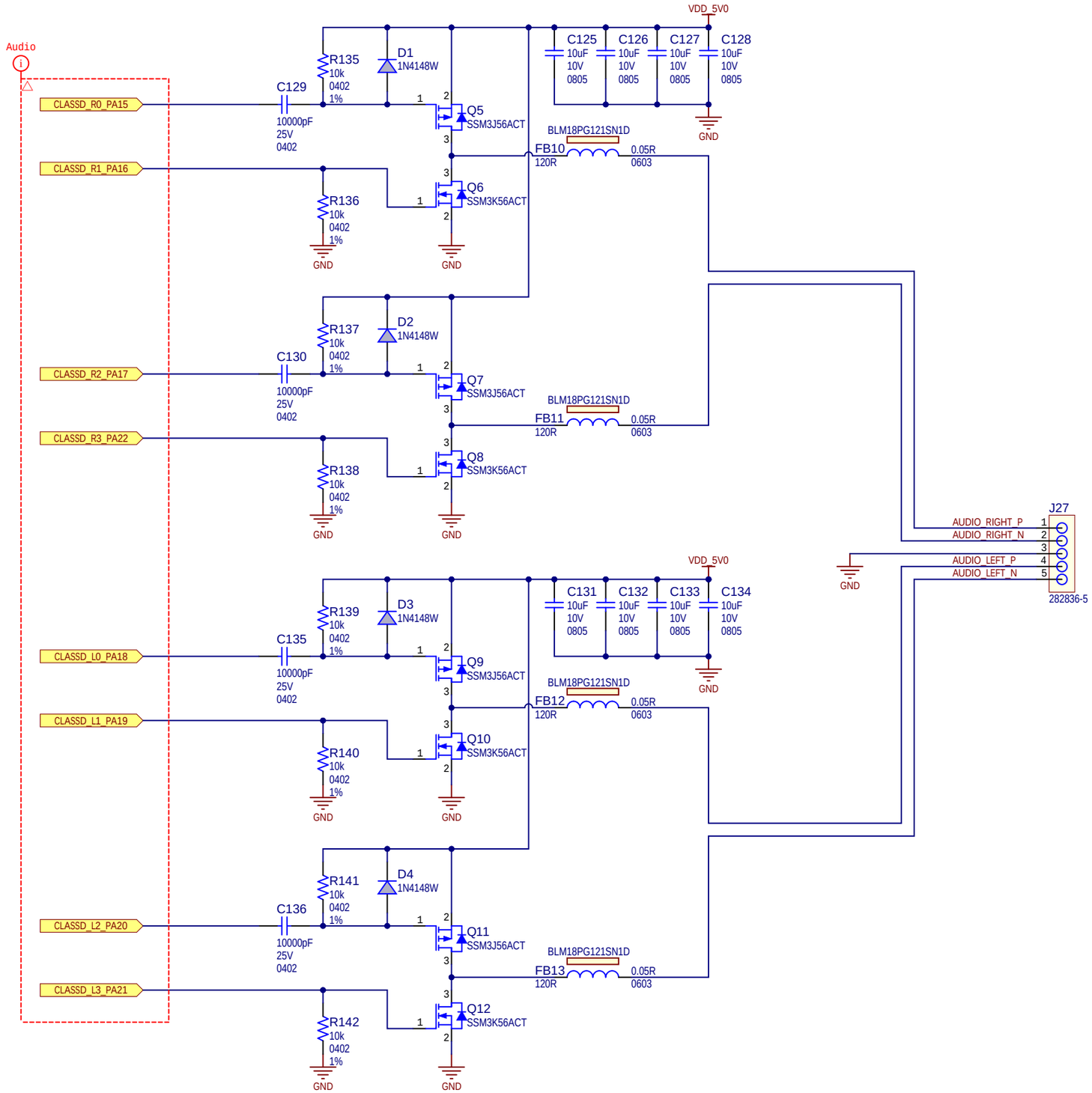

Drawn By: MS	MICROCHIP
Engineer: MS	
PartNumber: EA14J50A	Project Title: SAM9X75 DDR3 Engineering Board
Sheet Title: Audio CLASS-D	Variant Name: Manufacturing
Size: B	SCH #: 03-00470 Rev: 3 / PCB #: 04-11575 Rev: 3
Date: 26.01.2022 09:42:17	Sheet 9 of 14
File: 08 - Audio-CLASSD.SchDoc	Designed with Altium — Altium.com

USB-A port

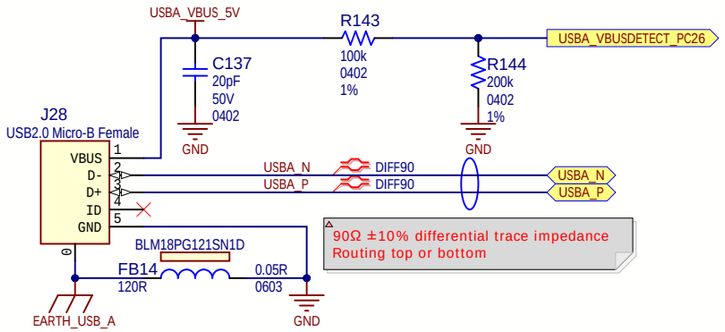

EEPROM

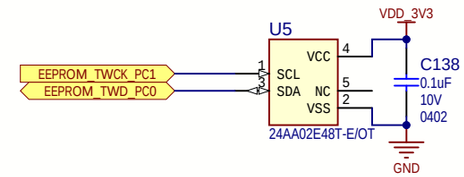

I2C Address: 1010XXX

USB-B port

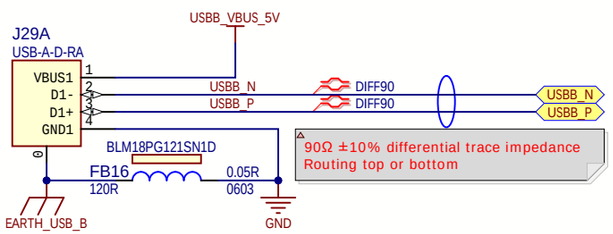

USB-B power switch

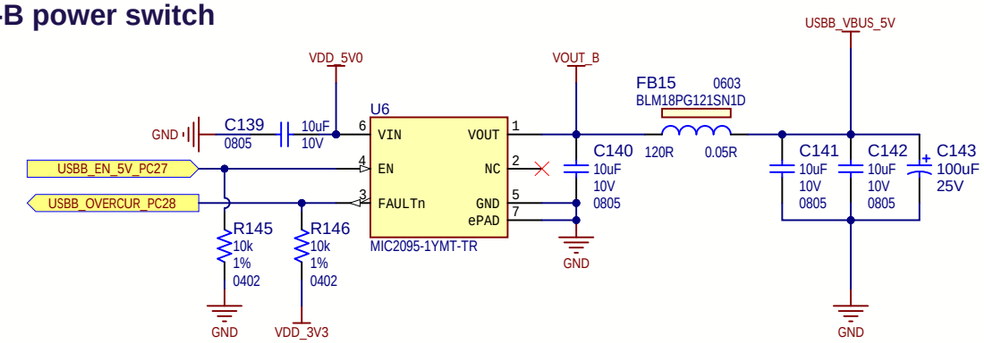

USB-C port

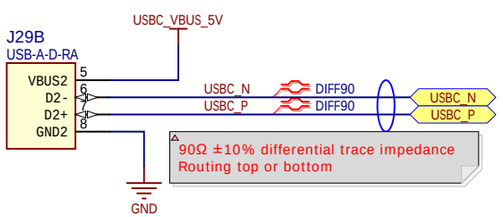

USB-C power switch

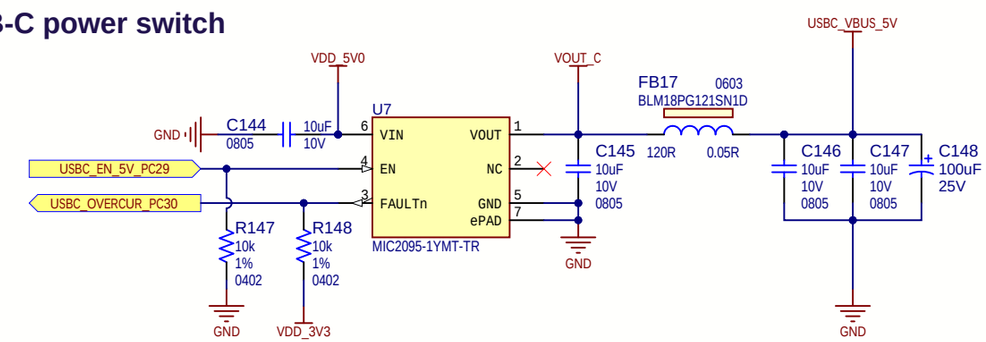

Drawn By: MS			MICROCHIP
Engineer: MS			
PartNumber: EA14J50A		Project Title: *SAM9X75 DDR3 Engineering Board*	
Sheet Title: USB, EEPROM		Variant Name: Manufacturing	Designed with Altium
Size B	SCH #: 03-00470 / PCB #: 04-11575	Rev: 3 / Rev: 3	Date: 26.01.2022 09:42:18 / Sheet 10 of 14
File: 09 - USB-EEPROM.SchDoc			Altium.com

CAN-FD

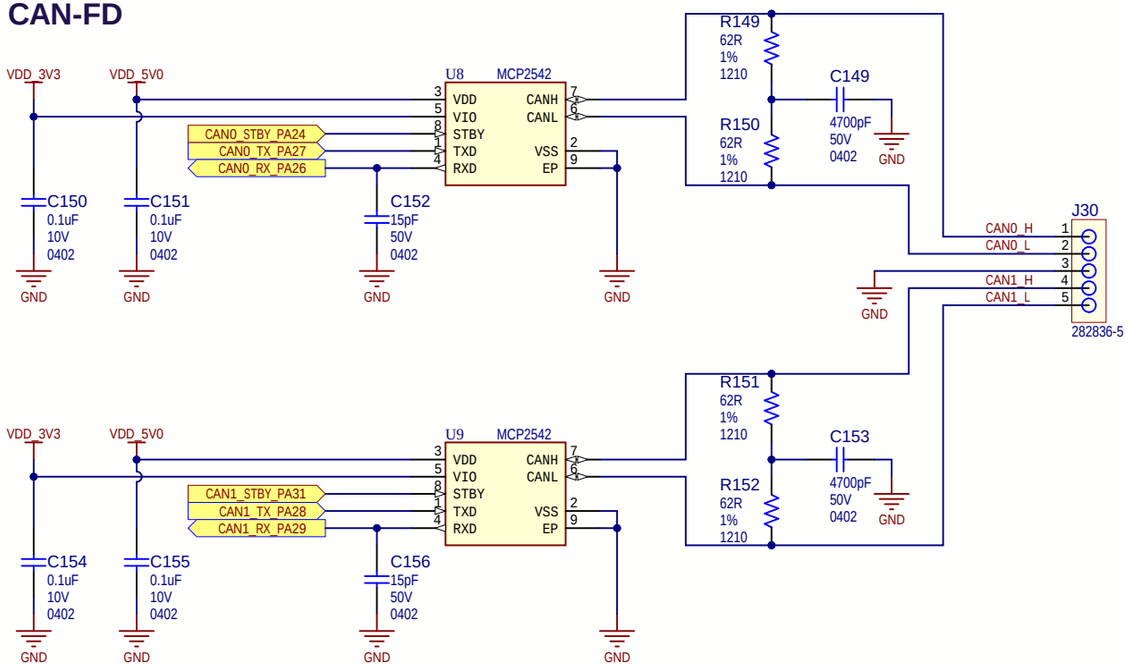

mikroBUS

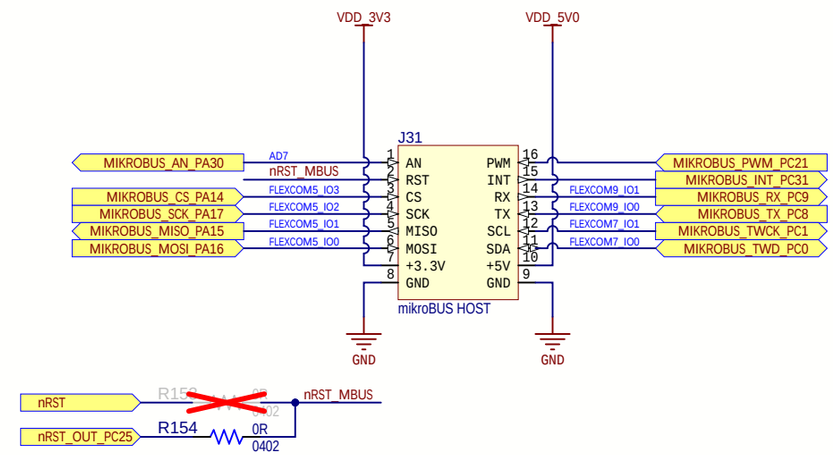

MIPI

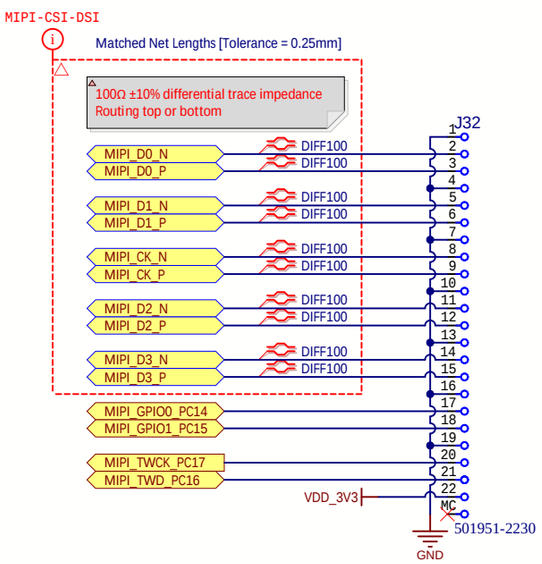

LVDS

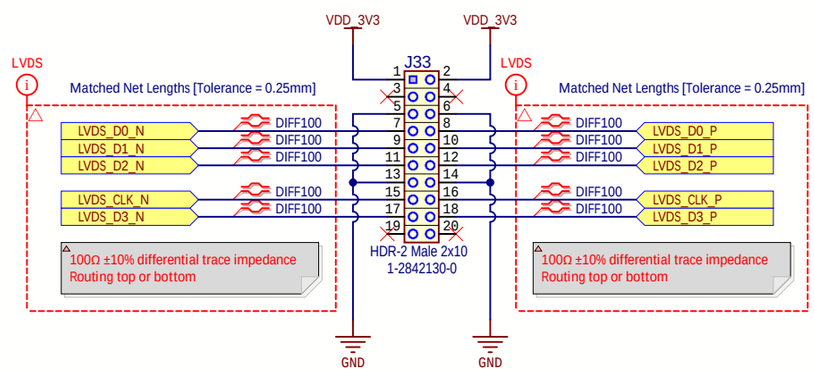

Drawn By: MS			
Engineer: MS			
PartNumber: EA14J50A	Project Title: *SAM9X75 DDR3 Engineering Board*		
Sheet Title: CANFD, LVDS, MIPI, MikroBus	Variant Name: Manufacturing		Designed with Altium
Size B	SCH #: 03-00470 Rev: 3	Date: 26.01.2022 09:42:18	Altium.com
	PCB #: 04-11575 Rev: 3	Sheet 11 of 14	
File: 10 - CANFD-LVDS-MIPI-MBUS.SchDoc			

Disable Boot

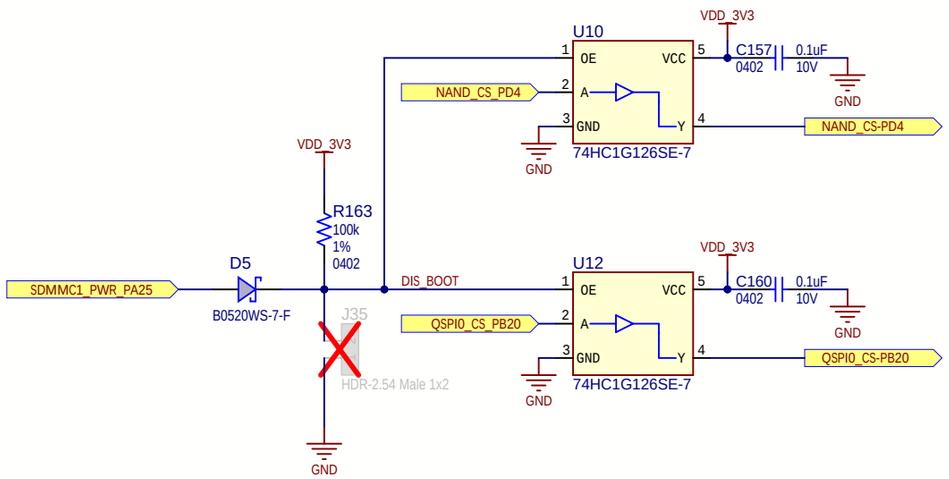

DEBUG UART-FTDI

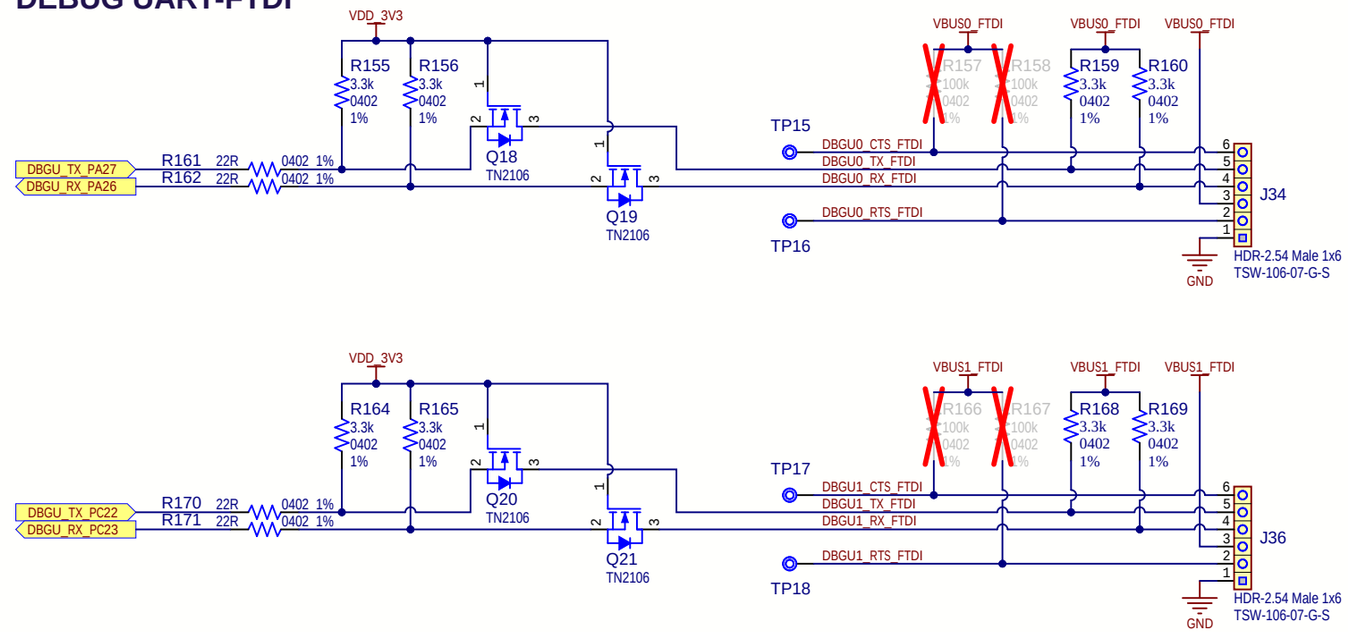

User Buttons

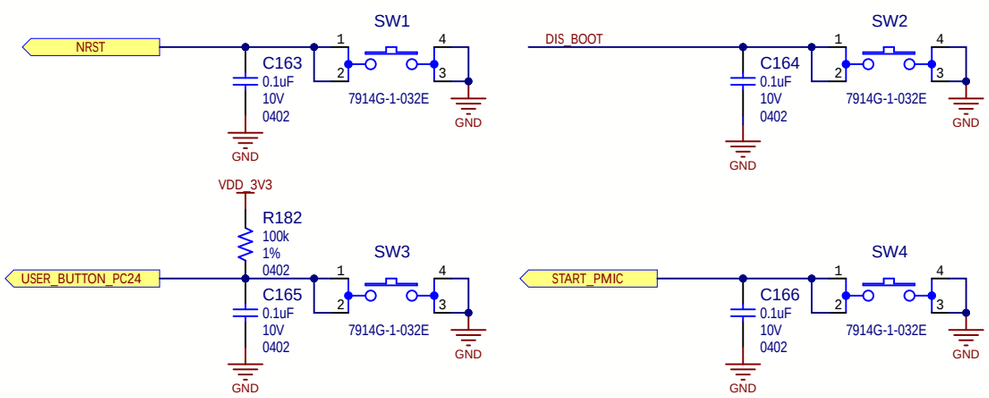

RGB LED

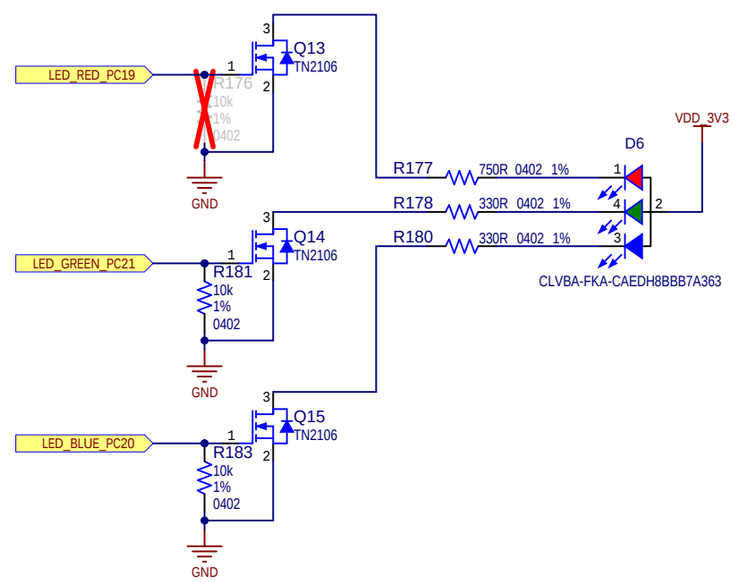

JTAG

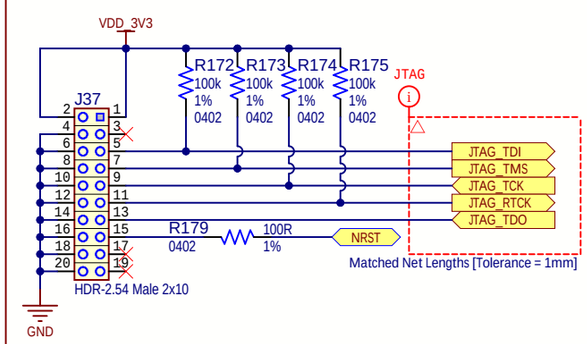

Drawn By: MS			
Engineer: MS			
PartNumber: EA14J50A	Project Title: SAM9X75 DDR3 Engineering Board		
Sheet Title: Debug, User Interface		Variant Name: Manufacturing	Designed with Altium
Size B	SCH #: 03-00470 Rev: 3	Date: 26.01.2022 09:42:18	Altium.com
	PCB #: 04-11575 Rev: 3	Sheet 12 of 14	
File: 11 - Debug-User-LED.SchDoc			

External 5V Input Power and Input Power protection

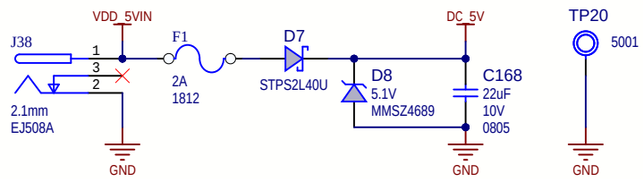

External 5V USB power

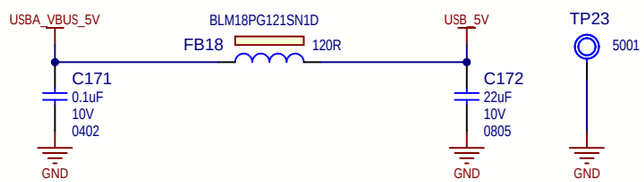

External Power Switch

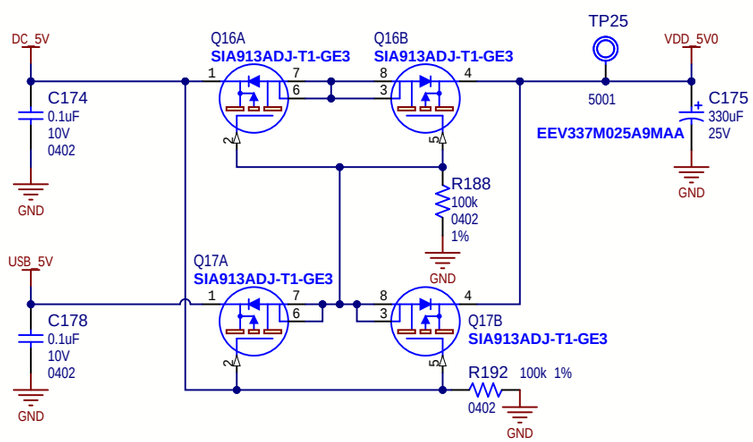

Power Distribution

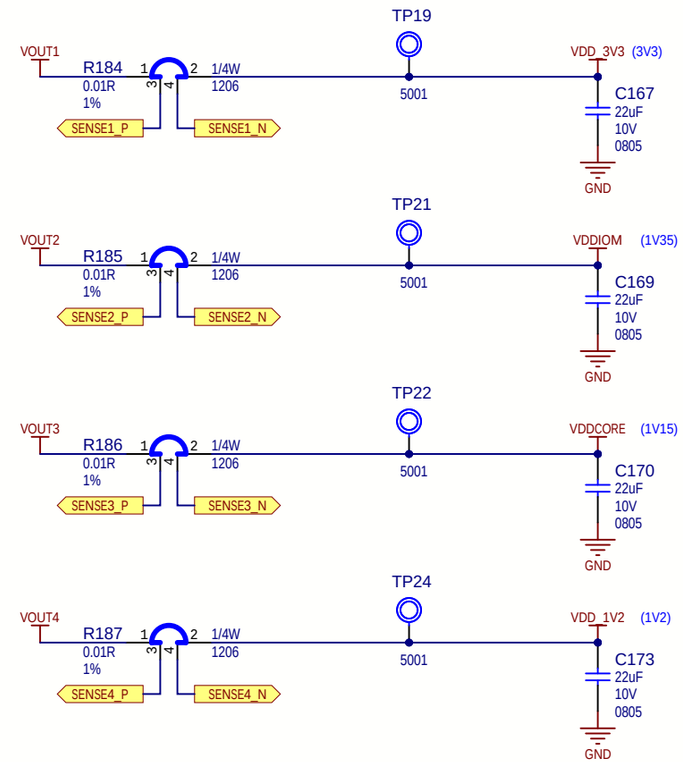

Power Measurement

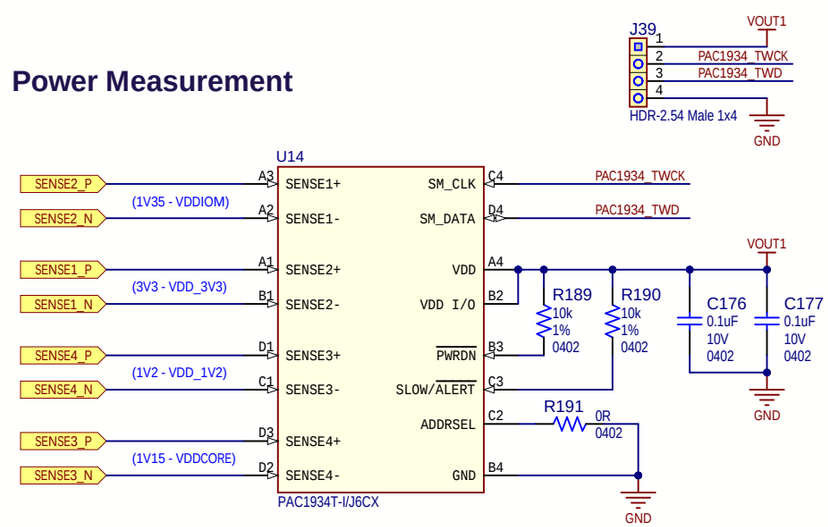

Backup Battery

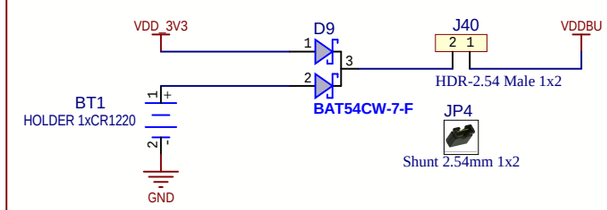

Drawn By: MS	
Engineer: MS	
PartNumber: EA14J50A	Project Title: SAM9X75 DDR3 Engineering Board
Sheet Title: Power Distribution	Variant Name: Manufacturing
Size B	SCH #: 03-00470 Rev: 3 Date: 26.01.2022 09:42:18
	PCB #: 04-11575 Rev: 3 Sheet 13 of 14
File: 12 - Power-Supply.SchDoc	

MICROCHIP

Designed with Altium

Altium.com

PMIC

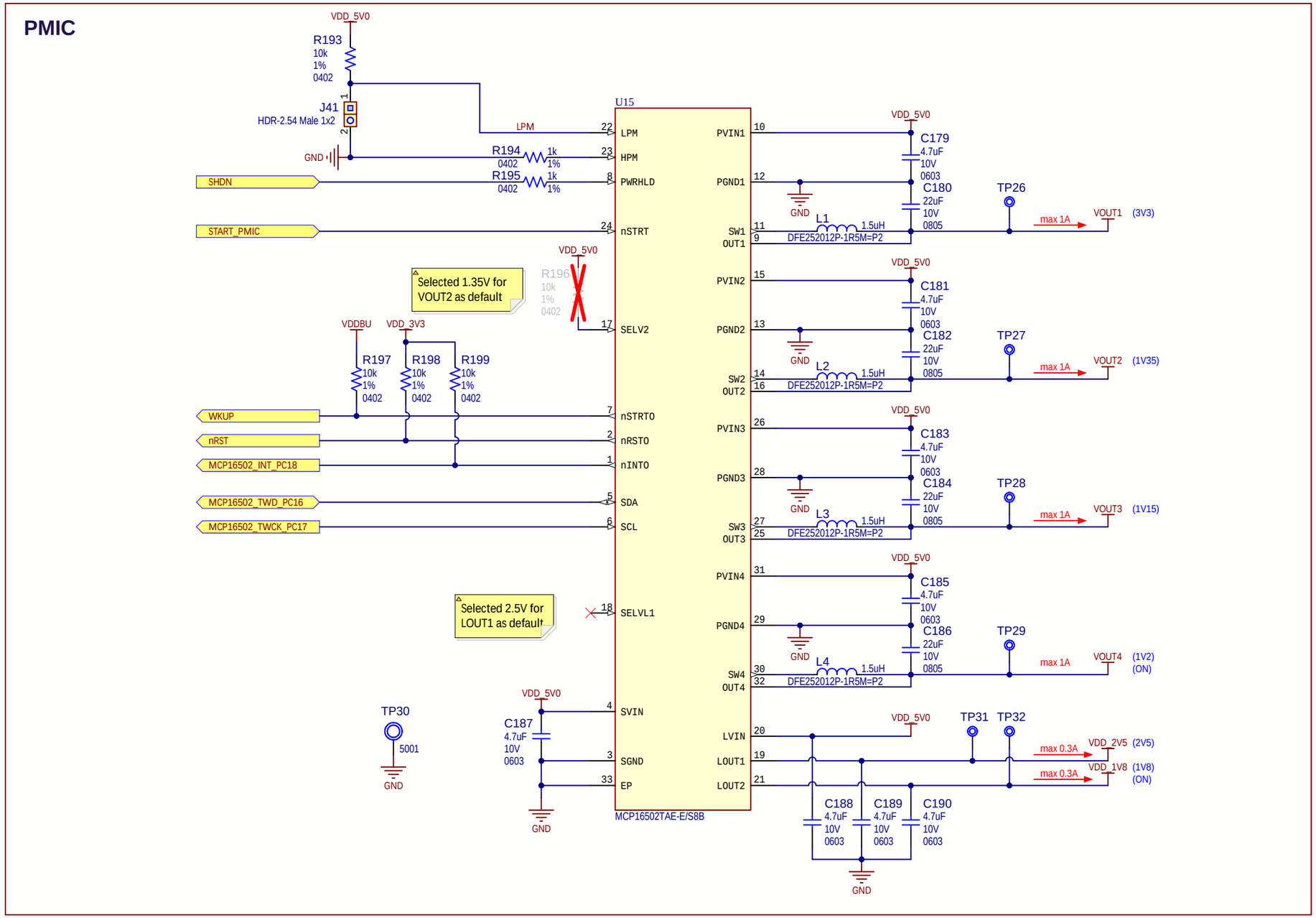

Drawn By: MS	MICROCHIP
Engineer: MS	
PartNumber: EA14J50A	Project Title: SAM9X75 DDR3 Engineering Board
Sheet Title: Power Supply	Variant Name: Manufacturing
Size: B	SCH #: 03-00470 Rev: 3 / PCB #: 04-11575 Rev: 3
Date: 26.01.2022 09:42:18	Sheet 14 of 14
File: 13 - PMIC.SchDoc	Designed with Altium — Altium.com