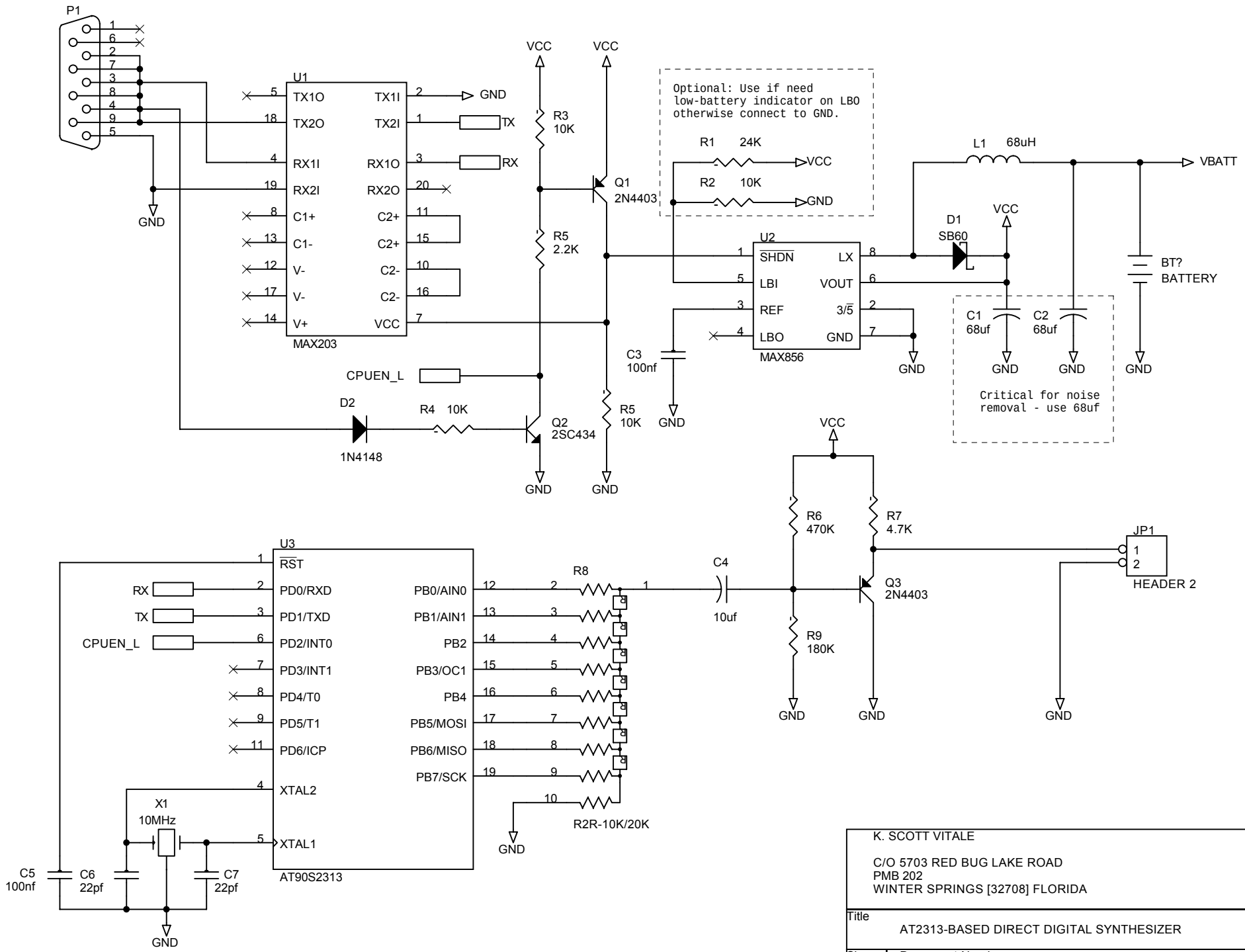

K. SCOTT VITALE

C/O 5703 RED BUG LAKE ROAD
PMB 202
WINTER SPRINGS [32708] FLORIDA

Title
AT2313-BASED DIRECT DIGITAL SYNTHESIZER

Size	Document Number	Rev
Custom		1.0

Date: Saturday, July 08, 2006 Sheet 1 of 1