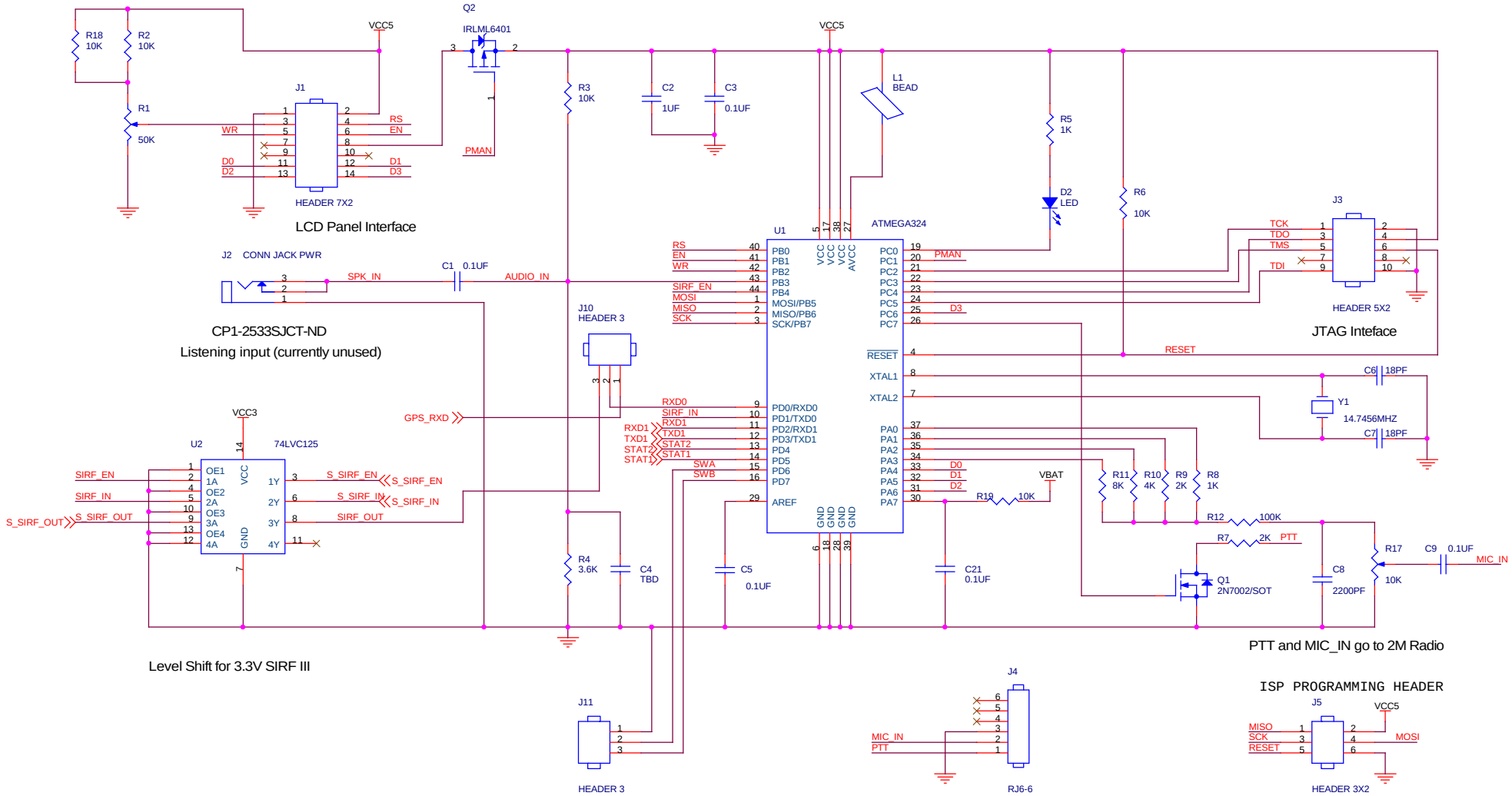

Title	AVR APRS ENCODER	
Size B	Document Number 100	Rev 1.0
Date: Tuesday, April 24, 2012	Sheet 1 of 2	