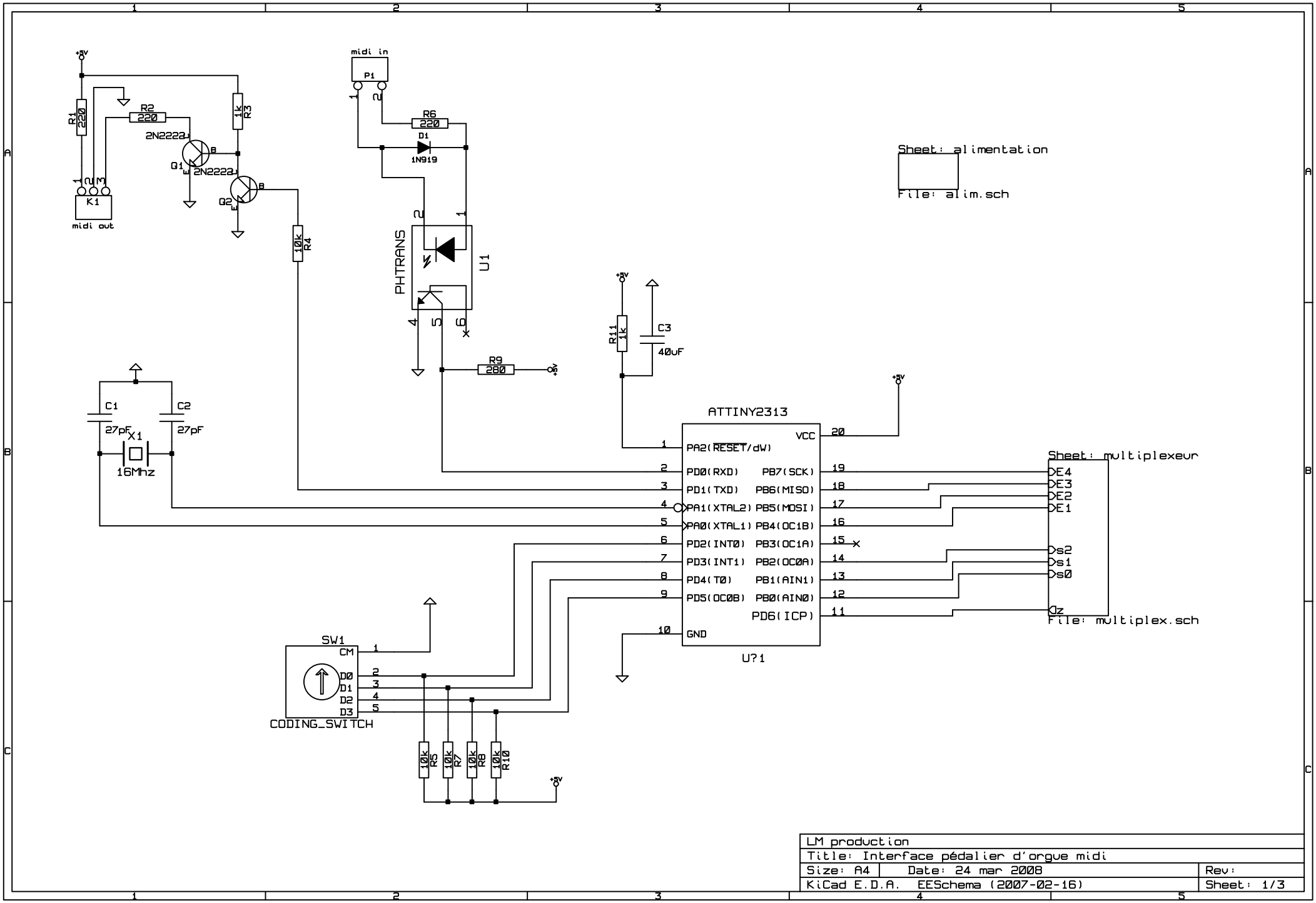

LM production		
Title: Interface pédalier d'orgue midi		
Size: A4	Date: 24 mar 2008	Rev:
KiCad E.D.A. EESchema (2007-02-16)		Sheet: 1/3

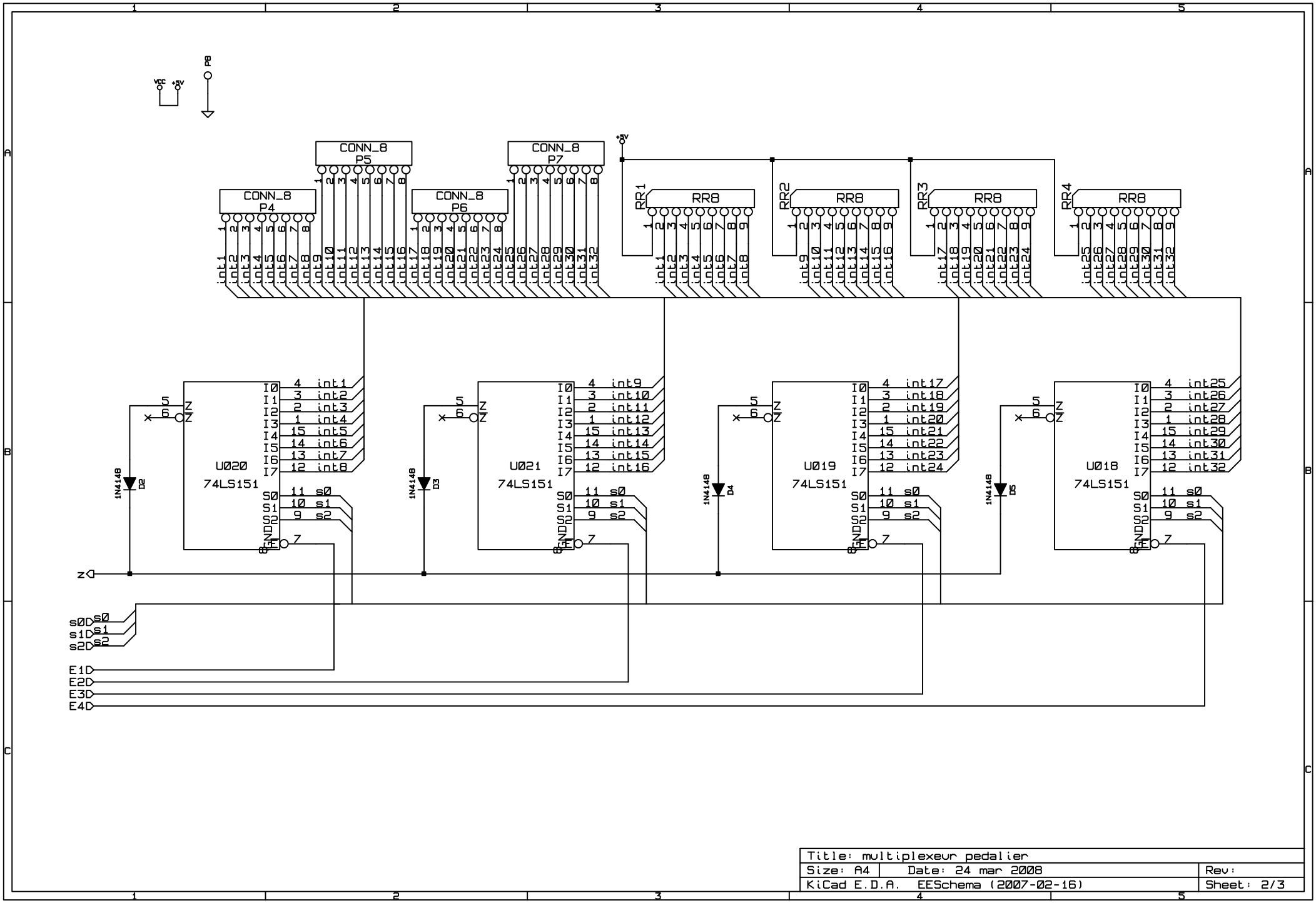
CONN_8
P4
CONN_8
P5
CONN_8
P6
CONN_8
P7
RR1
RR2
RR3
RR4
RR8
U020
U021
U019
U018
74LS151
1N4148
D2
D3
D4
D5
+5V
P8
z
s0
s1
s2
E1
E2
E3
E4
Title: multiplexeur pedalier
Size: A4
Date: 24 mar 2008
Rev:
KiCad E.D.A. EESchema (2007-02-16)
Sheet: 2/3

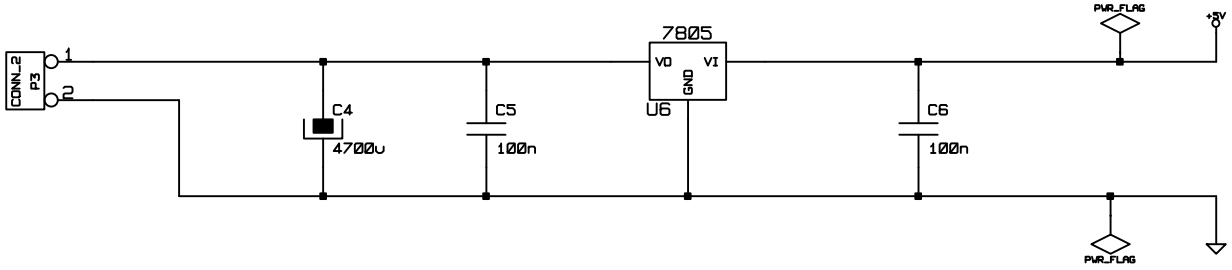

Title:		
Size: A4	Date: 24 mar 2008	Rev:
KiCad E.D.A. EESchema (2007-02-16)		Sheet: 3/3