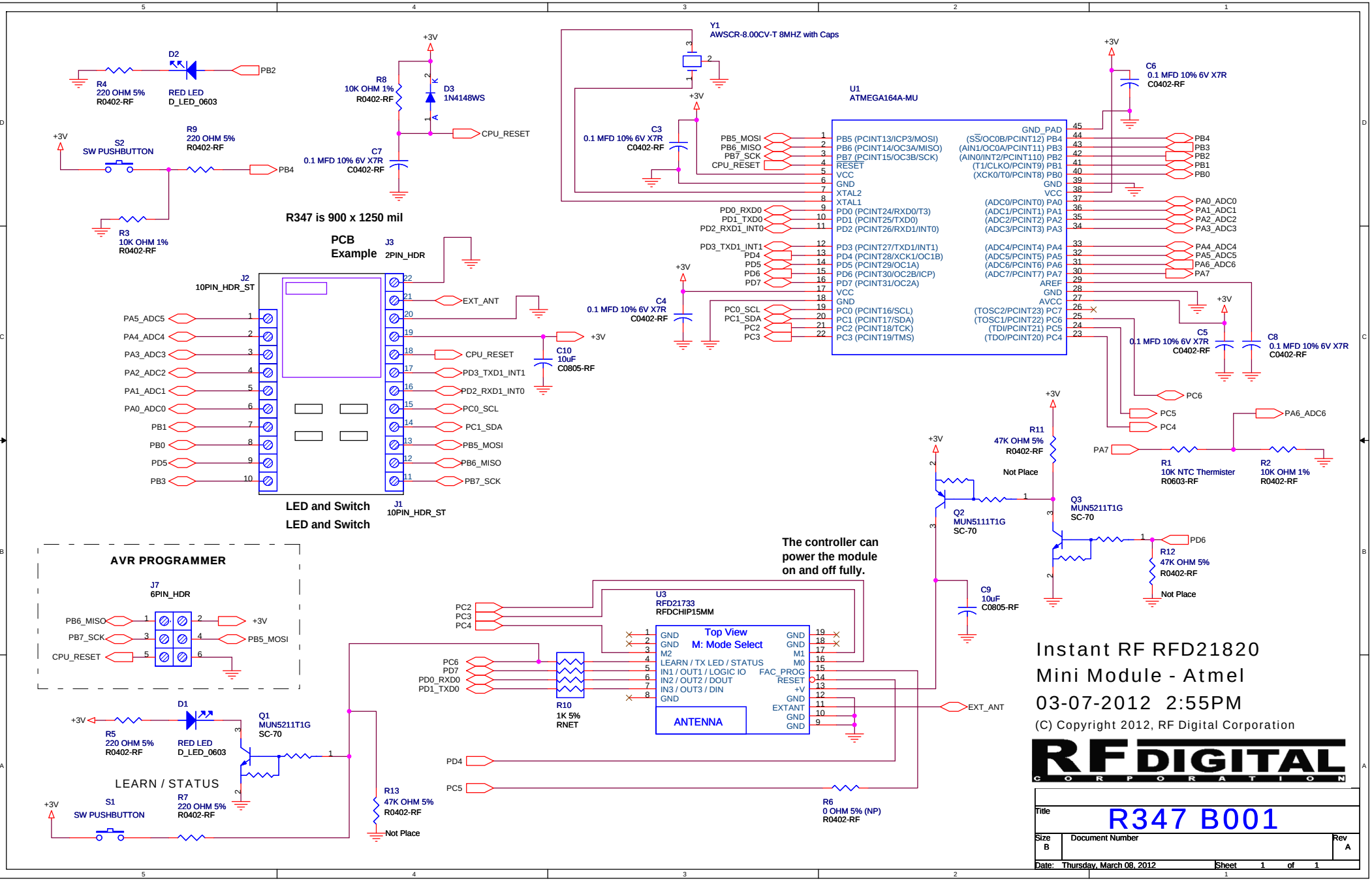
D2
R4
220 OHM 5%
R0402-RF
RED LED
D_LED_0603
PB2
+3V
S2
SW PUSHBUTTON
R9
220 OHM 5%
R0402-RF
PB4
R3
10K OHM 1%
R0402-RF
R8
10K OHM 1%
R0402-RF
D3
1N4148WS
CPU_RESET
C7
0.1 MFD 10% 6V X7R
C0402-RF
R347 is 900 x 1250 mil
PCB
Example
J3
2PIN_HDR
J2
10PIN_HDR_ST
PA5_ADC5
PA4_ADC4
PA3_ADC3
PA2_ADC2
PA1_ADC1
PA0_ADC0
PB1
PB0
PD5
PB3
EXT_ANT
CPU_RESET
PD3_TXD1_INT1
PD2_RXD1_INT0
PC0_SCL
PC1_SDA
PB5_MOSI
PB6_MISO
PB7_SCK
C10
10uF
C0805-RF
LED and Switch
J1
10PIN_HDR_ST
LED and Switch
Y1
AWSCR-8.00CV-T 8MHZ with Caps
U1
ATMEGA164A-MU
C3
0.1 MFD 10% 6V X7R
C0402-RF
PB5_MOSI
PB6_MISO
PB7_SCK
CPU_RESET
PD0_RXD0
PD1_TXD0
PD2_RXD1_INT0
PD3_TXD1_INT1
PD4
PD5
PD6
PD7
C4
0.1 MFD 10% 6V X7R
C0402-RF
PC0_SCL
PC1_SDA
PC2
PC3
C6
0.1 MFD 10% 6V X7R
C0402-RF
PB4
PB3
PB2
PB1
PB0
PA0_ADC0
PA1_ADC1
PA2_ADC2
PA3_ADC3
PA4_ADC4
PA5_ADC5
PA6_ADC6
PA7
C5
0.1 MFD 10% 6V X7R
C0402-RF
C8
0.1 MFD 10% 6V X7R
C0402-RF
PC6
PC5
PC4
PA6_ADC6
PA7
R1
10K NTC Thermister
R0603-RF
R2
10K OHM 1%
R0402-RF
R11
47K OHM 5%
R0402-RF
Not Place
Q2
MUN5111T1G
SC-70
Q3
MUN5211T1G
SC-70
PD6
R12
47K OHM 5%
R0402-RF
Not Place
C9
10uF
C0805-RF
AVR PROGRAMMER
J7
6PIN_HDR
PB6_MISO
PB7_SCK
CPU_RESET
PB5_MOSI
The controller can
power the module
on and off fully.
U3
RFD21733
RFDCHIP15MM
Top View
M: Mode Select
GND
M2
LEARN / TX LED / STATUS
IN1 / OUT1 / LOGIC IO
IN2 / OUT2 / DOUT
IN3 / OUT3 / DIN
GND
M1
M0
FAC_PROG
RESET
+V
EXTANT
ANTENNA
PC2
PC3
PC4
PC6
PD7
PD0_RXD0
PD1_TXD0
R10
1K 5%
RNET
EXT_ANT
PD4
PC5
R6
0 OHM 5% (NP)
R0402-RF
D1
R5
220 OHM 5%
R0402-RF
RED LED
D_LED_0603
Q1
MUN5211T1G
SC-70
LEARN / STATUS
S1
SW PUSHBUTTON
R7
220 OHM 5%
R0402-RF
R13
47K OHM 5%
R0402-RF
Not Place
Instant RF RFD21820
Mini Module - Atmel
03-07-2012 2:55PM
(C) Copyright 2012, RF Digital Corporation
RF DIGITAL CORPORATION
Title
R347 B001
Size
B
Document Number
Rev
A
Date: Thursday, March 08, 2012
Sheet 1 of 1