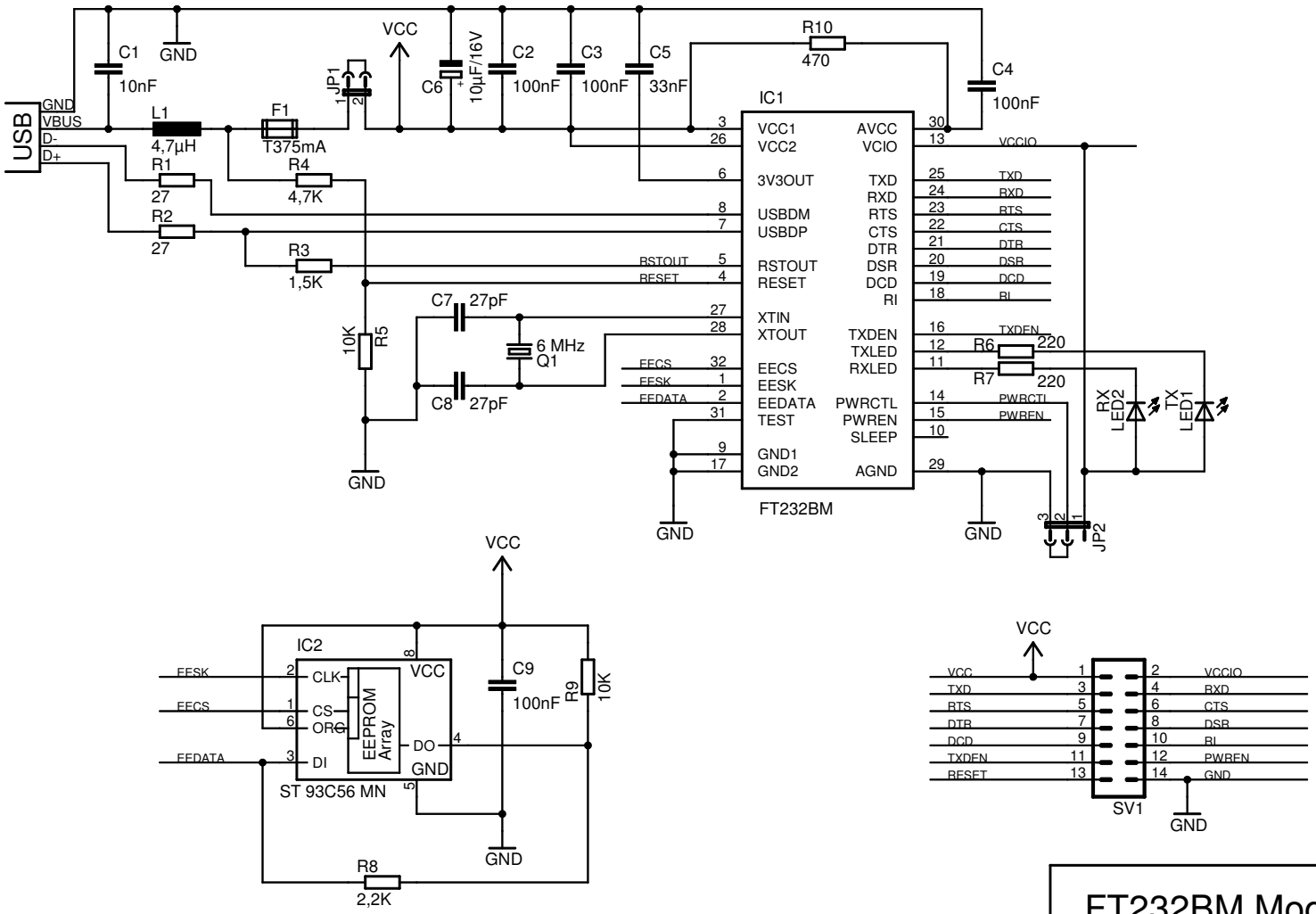

FT232BM Modul V1.0

Lutz Lisseck, 2005

TITLE: ft232-modul_v1.0

Document Number:

REV:

Date: 20.05.2005 20:48:08

Sheet: 1/1