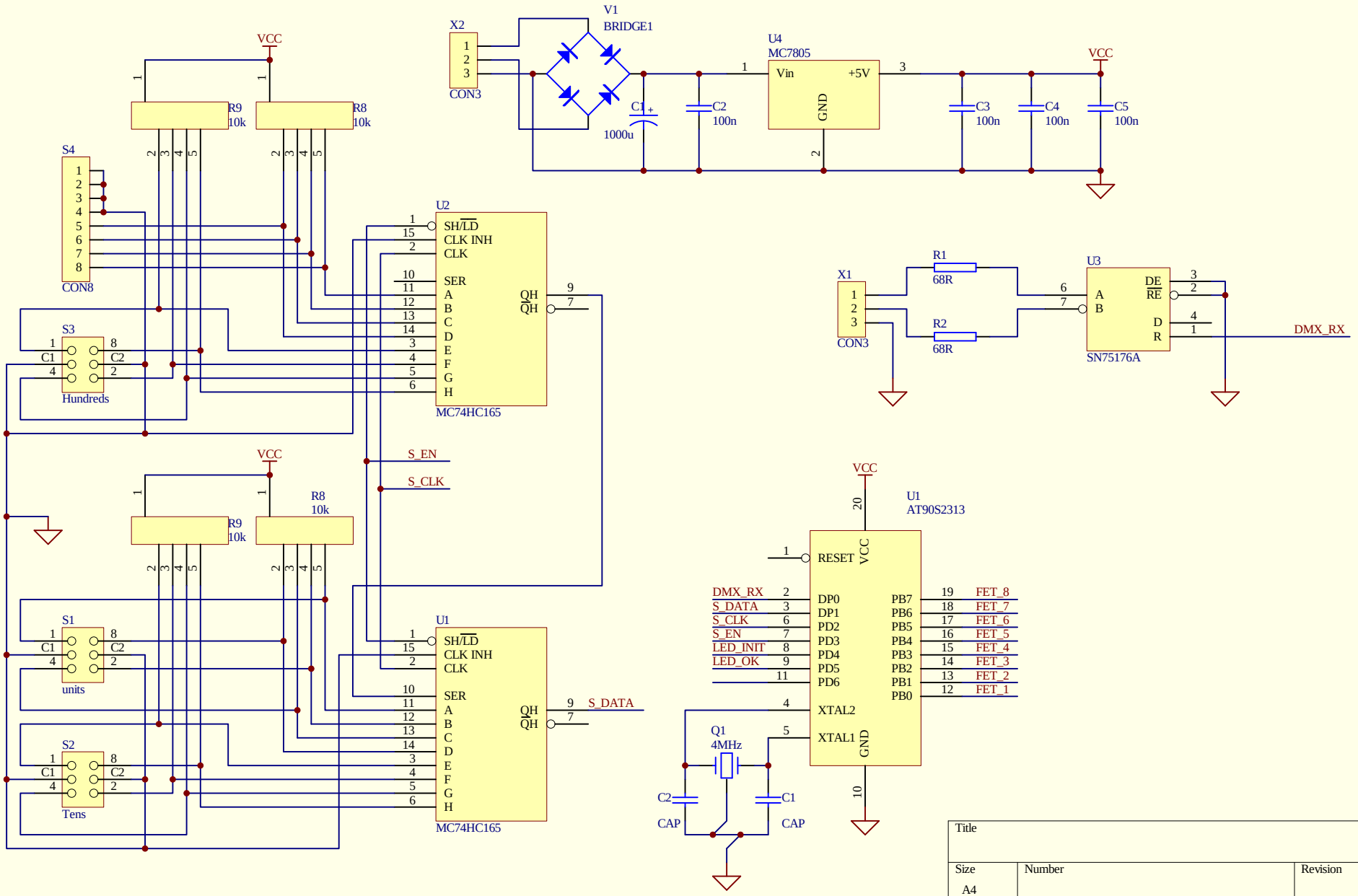

Title		
Size A4	Number	Revision
Date: 15-Apr-2006	Sheet of	
File: C:\Documents and Settings\..\Tiny_hc165.sch	Drawn By:	