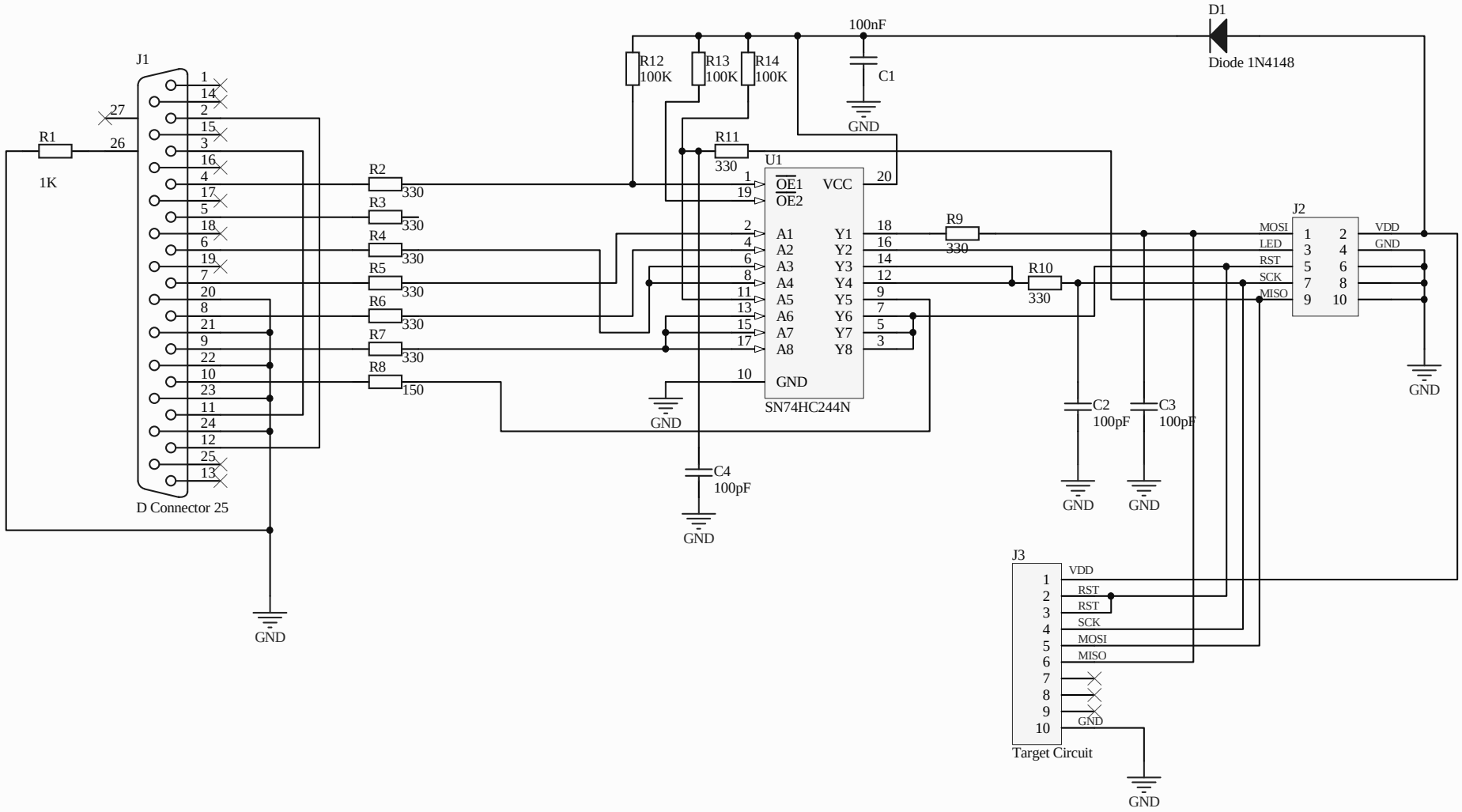

Title		
STK200/300++		
Size: A	Number	Revision
Date: 8/8/2010		Sheet of
File: C:\Users\..\betterSTK200.SchDoc		Drawn By: GLinBoy