RGB CONTROLLER

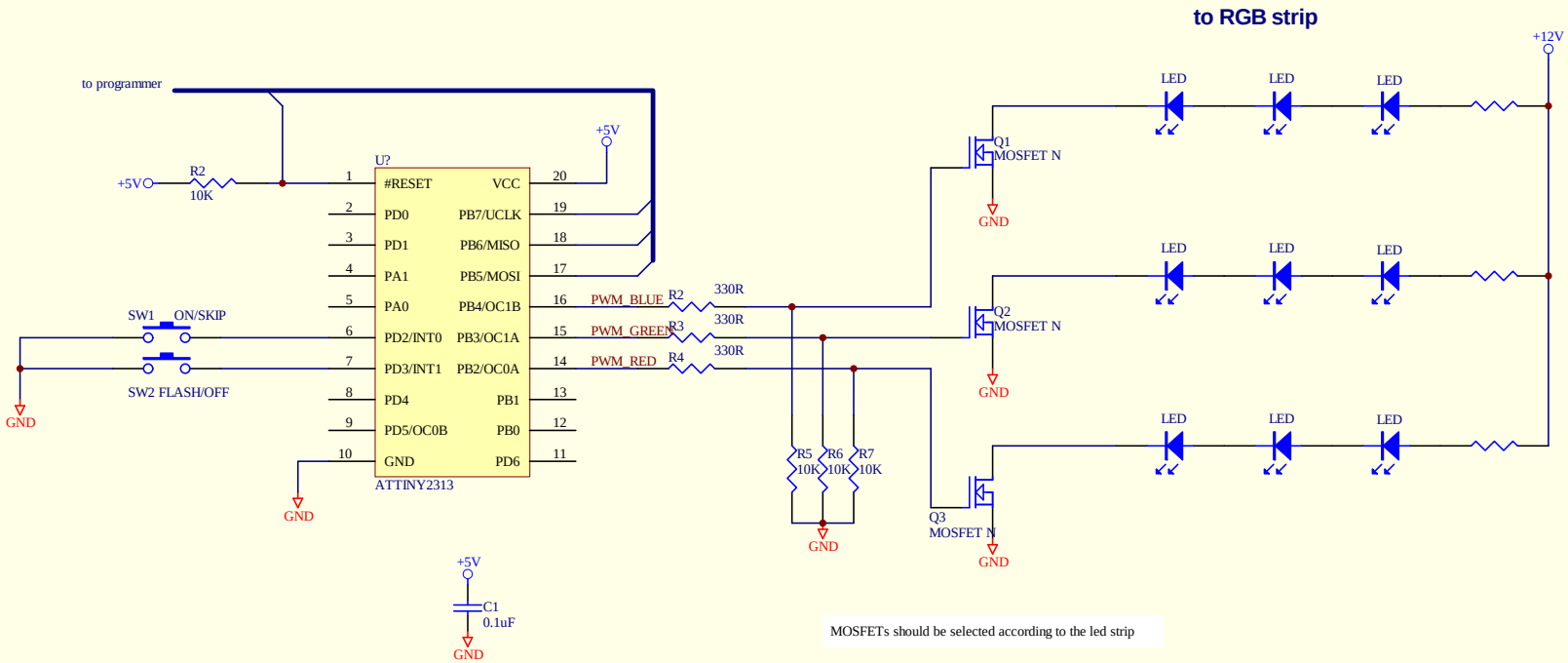

MOSFETs should be selected according to the led strip

Title RGB CONTROLLER		
Size A4	Number 1	Revision A
Date: 23-Aug-2010		Sheet of
File: D:\Pablo\Atmel\RGBCont\RGBCont.ddb		Drawn By: palmering@hotmail.com