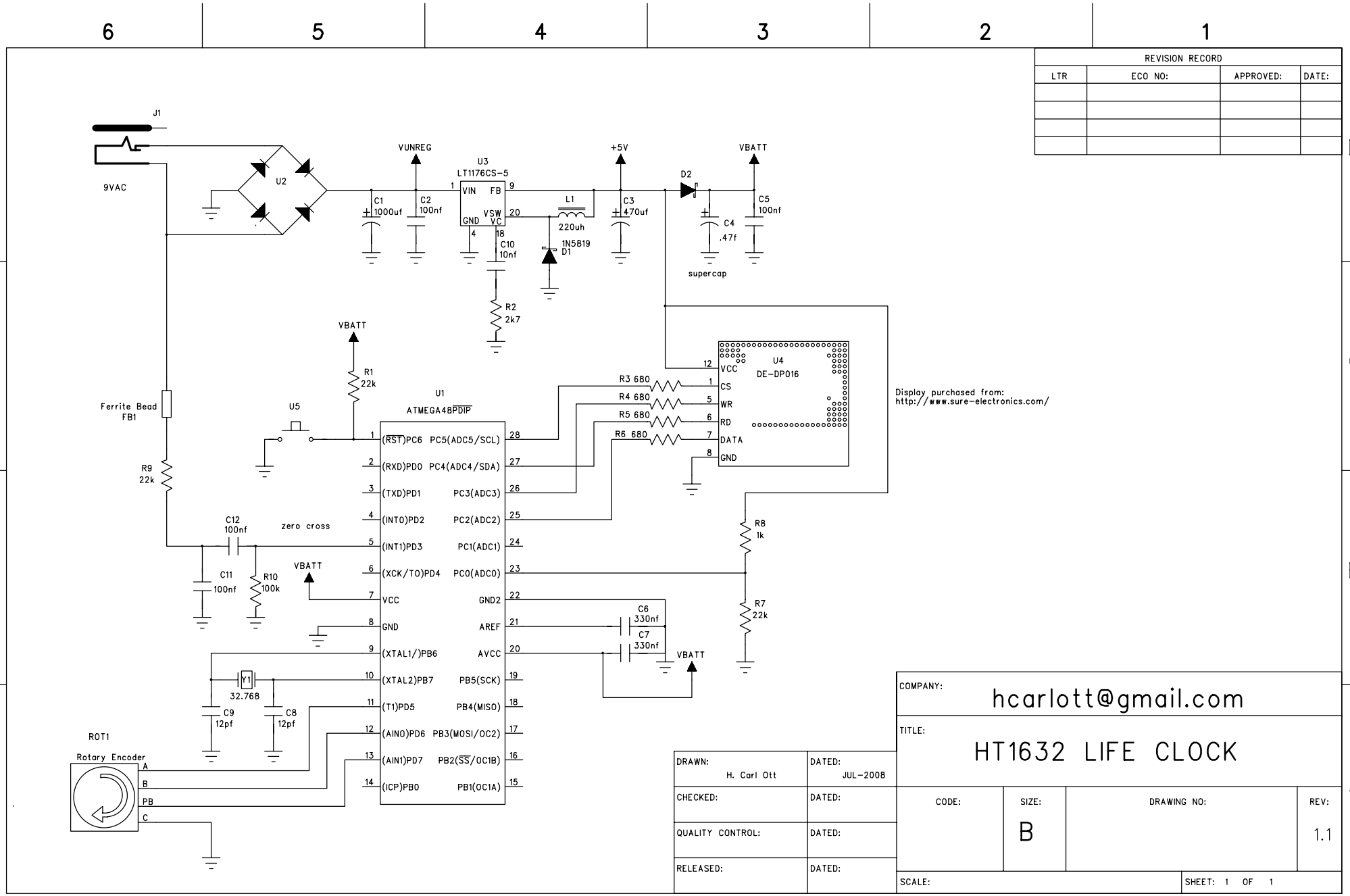
REVISION RECORD
LTR
ECO NO:
APPROVED:
DATE:
J1
9VAC
U2
VUNREG
C1
1000uf
C2
100nf
U3
LT1176CS-5
VIN
FB
VSW
GND
VC
C10
10nf
R2
2k7
L1
220uh
1N5819
D1
+5V
C3
470uf
D2
VBATT
C4
.47f
supercap
C5
100nf
VBATT
R1
22k
U5
U1
ATMEGA48PDIP
(RST)PC6
PC5(ADC5/SCL)
(RXD)PD0
PC4(ADC4/SDA)
(TXD)PD1
PC3(ADC3)
(INT0)PD2
PC2(ADC2)
(INT1)PD3
PC1(ADC1)
(XCK/T0)PD4
PC0(ADC0)
VCC
GND2
GND
AREF
(XTAL1/)PB6
AVCC
(XTAL2)PB7
PB5(SCK)
(T1)PD5
PB4(MISO)
(AIN0)PD6
PB3(MOSI/OC2)
(AIN1)PD7
PB2(SS/OC1B)
(ICP)PB0
PB1(OC1A)
Ferrite Bead
FB1
R9
22k
C12
100nf
zero cross
C11
100nf
R10
100k
VBATT
Y1
32.768
C9
12pf
C8
12pf
ROT1
Rotary Encoder
A
B
PB
C
R3 680
R4 680
R5 680
R6 680
U4
DE-DP016
VCC
CS
WR
RD
DATA
GND
Display purchased from:
http://www.sure-electronics.com/
R8
1k
R7
22k
C6
330nf
C7
330nf
VBATT
DRAWN:
H. Carl Ott
DATED:
JUL-2008
CHECKED:
DATED:
QUALITY CONTROL:
DATED:
RELEASED:
DATED:
COMPANY:
hcarlott@gmail.com
TITLE:
HT1632 LIFE CLOCK
CODE:
SIZE:
B
DRAWING NO:
REV:
1.1
SCALE:
SHEET: 1 OF 1