CAN bus communication module

Model: NE-CM320
Hardware Version: V1.2
File Version: V1.1

CM320 is a device that has a low price and high performance for CAN to 232 and 232 to CAN.

The product uses a modular design, small size, the interface pin less, so simple, user-friendly embedded devices with UART interface; Without changing any the structure of the hardware, the equipment will can get the CAN-bus communication interface to achieve the UART device and CAN-bus network communication. This module can be easily to set serial baud rate and CAN baud rate and other related parameters;CM320 can be widely used in instruments, meters, petrochemical, power monitoring, engineering machinery, automobile electronics and other fields.

Contact:

Company: Easy Electronic Technology Co., Ltd. Jinan,Shandong,China

Address : Room NO.602,Building NO.14, unit 5,shengfu Garden,Gaoxin District,Jinan ,Shandong ,China.

TEL:0086-531-62327572

Fax :0086-531-80879869

AVRVi Website:www.easyele.com

contents

CAN BUS COMMUNICATION MODULE 1

1. PRODUCT INTRODUCTION 4

1.1 INTRODUCTION 4

1.2 CM320 RANGE OF APPLICATIONS 4

1.3 MODULE RESOURCE LIST 4

1.4 FACTORY DEFAULT SETTINGS 4

2. OVERVIEW 5

2.1 PACKAGING INFORMATION AND PARAMETERS 5

2.2 PIN DEFINITION 6

2.3 THE HARDWARE CONNECTION FOR RS232-CANBUS 6

2.3.1 Power Connector 6

2.3.2 RS232 Signal connection 7

2.3.3 CAN-bus network Connection 7

2.4 THE SCOPE OF APPLICATION 8

2.4.1 Application Overview 8

2.4.2 Application areas 8

2.4.3 For instruments, meters instance 9

3. CM-320 CONFIGURE PROFILE 10

3.1 CONNECTED DEVICE 10

3.2 CONVERSION SETTINGS 11

3.2.1 Serial port 11

3.2.2 Serial baud rate 11

3.2.3 Conversion mode 12

3.2.4 Conversion direction *12*

3.2.5 The time interval between the serial frame *12*

3.3 CAN SETTINGS 13

3.3.1 CAN baud rate *13*

3.3.2 Frame type *13*

3.3.3 CAN connection's addresses *14*

3.3.4 Enable filter *14*

3.3.5 Local Address *14*

3.3.6 Address mask *15*

3.4 INFORMATION 16

4. USE QUICK START 17

4.1 TRANSPARENT TRANSFER MODE 17

4.1.1 The most simple hardware *17*

4.1.2 CM-320 module configuration parameters *18*

4.1.3 Transparent transfer *19*

4.2 TRANSPARENT TRANSFER WITH MARK MODE 20

4.2.1 Hardware circuit *20*

4.2.2 CM-320 module configuration parameters *20*

4.2.3 Transparent transfer with mark *21*

5. PRECAUTIONS FOR USE 22

6. SERVICE AND SUPPORT 23

6.1 TECHNICAL SUPPORT: 23

6.2 COPYRIGHT 23

1. Product introduction

1.1 Introduction

CM320 is a device that has a low price and high performance for CAN to 232 and 232 to CAN. One CAN-bus channels and one RS232 serial port, it can achieve full-duplex bi-directional data forwarding between the CAN-bus port and RS232 port.

The product uses a modular design, small size, the interface pin less, so simple, user-friendly embedded devices with UART interface; Without changing any the structure of the hardware, the equipment will can get the CAN-bus communication interface to achieve the UART device and CAN-bus network communication.

1.2 CM320 range of applications

- Coal remote communication
- Existing RS-232 device is connected CAN-bus network
- Extend the standard length of RS-232 network communication
- PLC device is connected to the CAN-bus network to communication
- Monitoring the network data of the Industrial site
- The control system of the industrial automation
- Collection and analysis the data of the low-speed CAN network

1.3 Module resource list

- One CAN-bus channels
- One UART serial port

1.4 Factory default settings

Conversion settings:

- Serial baud rate : 9600bps
- Conversion mode : Transparent transfer
- Conversion direction : Two-way
- The time interval between the serial frame : Two characters

CAN settings:

- CAN baud rate : 500Kbps
- Frame type : Standard frame
- CAN connection's addresses : 00 00 00 00
- Enable filter : NO

2. Overview

2.1 Packaging information and parameters

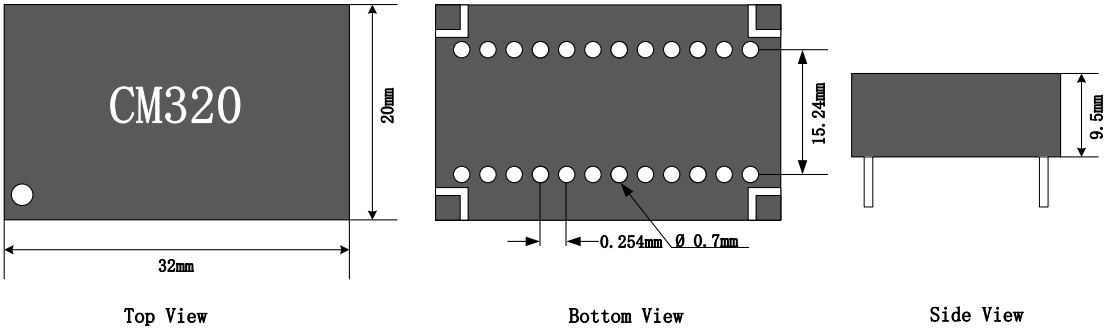

Figure 2.1 CM-320 Packaging Information

Packaging size: 32mm(length)×20mm(width)×9.5mm(height); Standard pin spacing :100mil; Double needle spacing :600mil.

Operating voltage: DC5V

Power : 0.5W

Serial baud rate: 300bps~38400bps

CAN baud rate: 100Kbps~1000Kbps

Operating temperature: -40°C ~ +85°C

Support CAN2.0A and CAN2.0B agreement, accord the ISO / DIS 11898 specification.

Transmission distance: Transmission distance depends on the CAN baud rate. The following table shows some typical data.

CAN baud rate	Distance
100Kbit/s	80m
250Kbit/s	80m
500Kbit/s	40m

Table 2.1 CAN transmission distance

2.2 Pin Definition

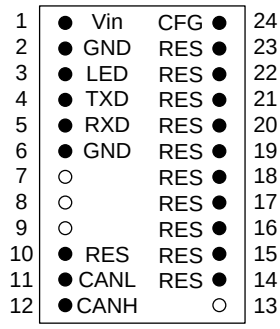

CM-320 Top View

Figure Notes:
● :This pin had draw forth
○ :This pin hasn't draw forth

No.	Name	Pin means
1	Vin	+5V Input
2	GND	Ground
3	LED	Indicating lights
4	TXD	UART Data out
5	RXD	UART Data in
6	GND	Ground
7-9	---	No pin leads
10	RES	Pin retention
11	CANL	CANL connection port
12	CANH	CANH connection port
13	--	No pin leads
14-23	RES	Pin retention
24	CFG	Configuration pins

*Notes:

1.RES pins are not connected, keep floating when the circuit is connected;

2.There are two GND pins, you can choose one to connect or all to the connection;

3.When the configuration pins (CFG) ground, and then re-power on, CM-320 will enter the configuration mode. Using the configuration software configuration CM-320 serial port baud rate, CAN baud rate, conversion mode and other parameters.

Figure 2.2 CM-320 Pin Definition

2.3 The hardware connection for RS232-CANbus

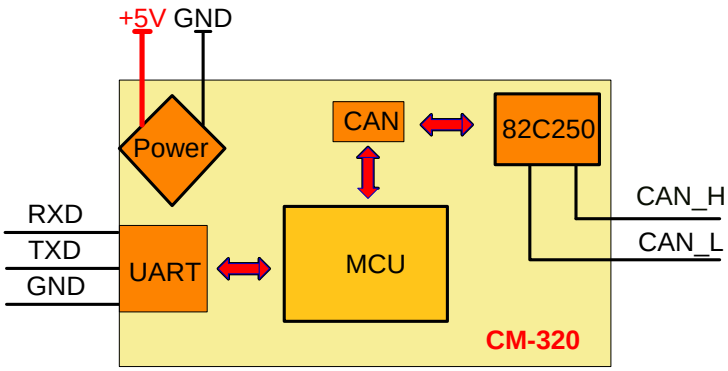

Figure 2.3 CM-320 Block Diagram

2.3.1 Power Connector

CM-320 power supply voltage is DC5V ± 5%, Module itself does not contain voltage regulator measure, Important to note that the supply voltage range, When the voltage is below 4.5V or above 5.5V, the system does not work. CM-320 pin 1 is +5 V input (positive), 2,6 pin is the power ground (negative).

2.3.2 RS232 Signal connection

CM-320 320' s 4,5 pins are TTL signal input and output pins, Since the input and output is TTL level, so when the CM320 is connected to the host computer (PC) serial interface, it needs to connect them using the MAX232. If the CM320 to communicate with the microcontroller, can be directly connected to them. Figure 2.4 shows a micro-controller and CM - 320 module connection diagram, the figure shows only need to connect the pins of these pins.

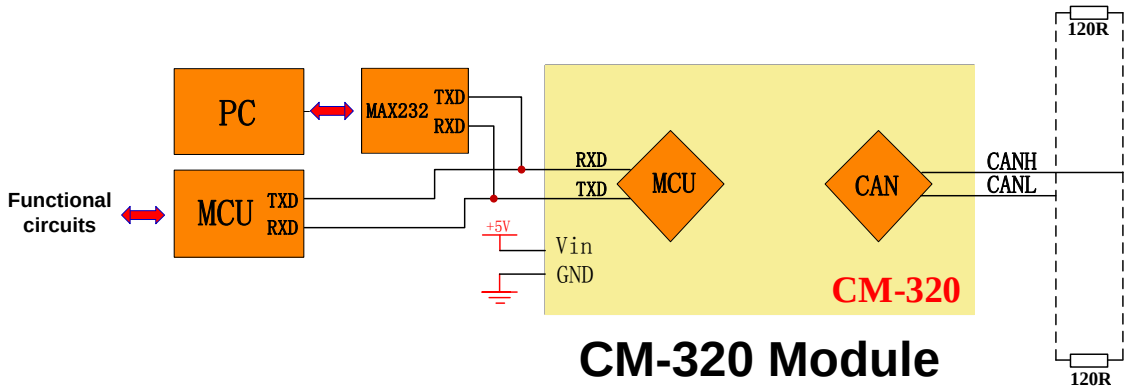

Figure 2.4 RS232 signal interface circuit

2.3.3 CAN-bus network Connection

CM320 module is used to implement UART data bus with CAN-bus two-way transparent data transfer. Figure 2.5 shows the CAN-bus network connection diagram. Two devices's CAN_H connected with the CAN_H, CAN_L and CAN_L connected. CAN-bus network of the two endpoints need to install the termination resistors.

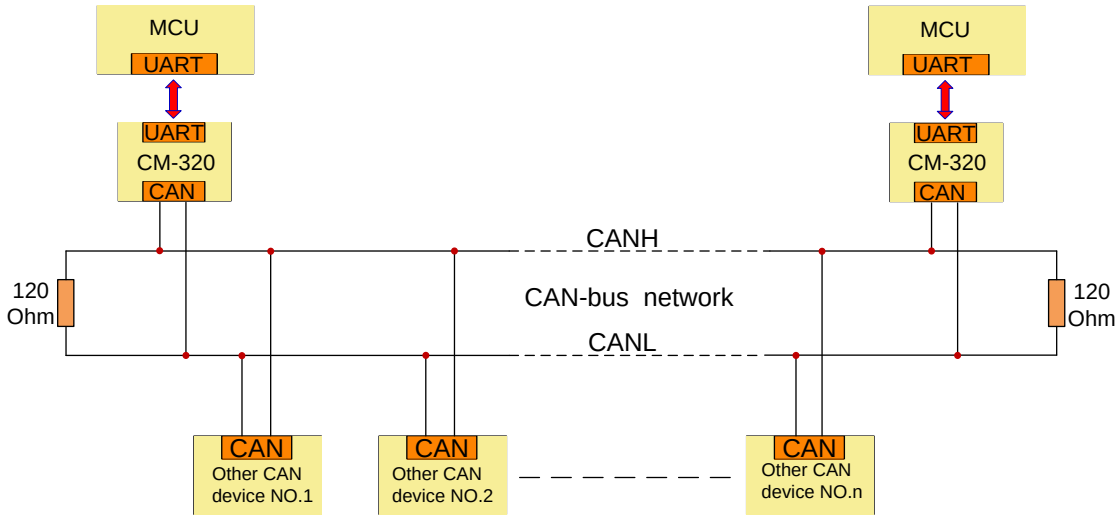

Figure 2.5 CAN-bus network connection circuit

2.4 The scope of application

2.4.1 Application Overview

CM-320 module contains a high-performance microcontroller with Flash, RAM, EEROM, watchdog, and the CAN bus driver,all of these are integrated in a module, it is an area of only 6.5 cm^2 of the module. CM-320 module contains a CAN-bus channels, a UART serial port and a SPI serial interface, can be easily embedded into devices with UART interface, Without changing any the structure of the hardware, the equipment will can get the CAN-bus communication interface, and to achieve the UART device and the CAN-bus network communication. CM-320 module UART interface supports a variety of communication baud rate, the range is 1200bps ~ 115200bps; supports CiA recommended six standard communication channel CAN-bus baud rate, communication speed range is 100Kbps ~ 1000Kbps. The module is suitable for low-speed CAN-bus data transfer, the maximum transfer rate of 400 frames / second, the module has a compact and easy to use features, it's the embedded system users a good choice. You can operate it does not need to know any knowledge about the CAN-bus!

2.4.2 Application areas

Instruments, meters
Petrochemical
Power Monitoring
Construction Machinery
Automotive Electronics
…

2.4.3 For instruments, meters instance

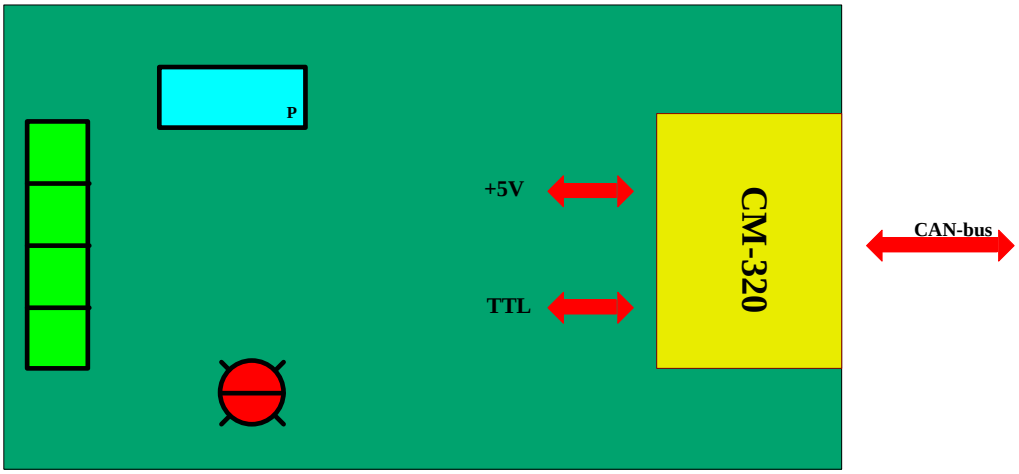

Figure 2.6 CM-320's use cases in the Instrument

Shown in Figure 2.6, just add a power supply (+5 V) and UART interface, you can immediately implement a CAN bus interface, so that your device is connected to CAN bus network, so that your UART interface to immediately upgrade to the CAN bus interface !

3. CM-320 Configure Profile

3.1 Connected device

When the configuration of the AB modules, you need the it's evaluation board, please will the 320 module correctly plug in the evaluation board, the module is marked with dots for the first leg, communication mode selection jumper J6 configured for RS232 mode, and the configuration jumper J4 is short, the configuration diagram as shown in Figure 3.1. Jumper configured correctly, then power supply to the evaluation board, power supply voltage between 7.5V-9V, and then connect the evaluation board with PC using serial cable; Using the PC running the CM-320 module's configuration software, You can set the communication parameters of the CM-320. This software has the function of saved last set parameters, and can read the current CM-320 module's set the parameters.

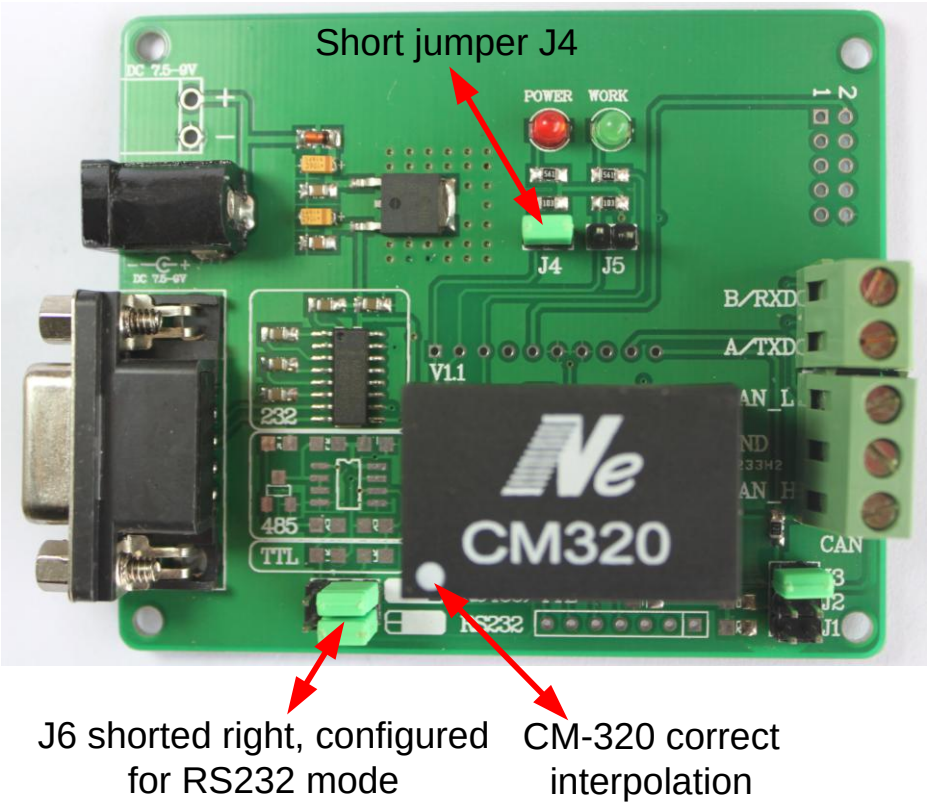

Figure 3.1 Diagram of CAN configuration

3.2 Conversion settings

Conversion parameters means CM-320 module's conversion rules, Communication direction and other parameters, Interface shown in Figure. 3.2.

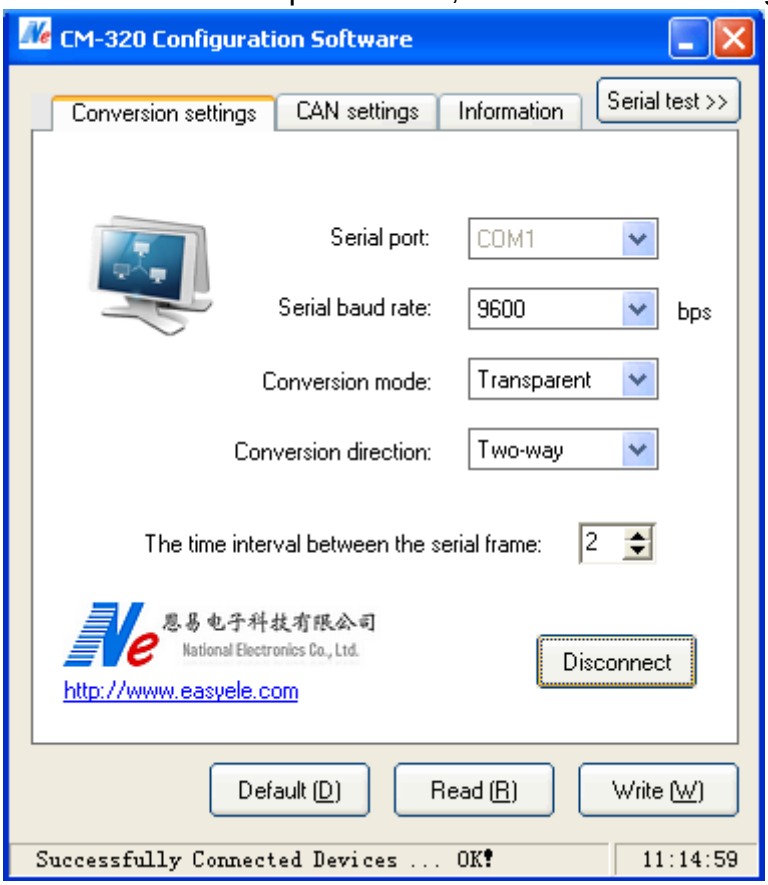

Figure 3.2 CM-320 configuration software

3.2.1 Serial port

Serial port is to use the computer COM port, you can find the serial port in the Device Manager. If you are using the serial port is COM, then please select the COM1 serial port and then connect. Select the correct serial number, click on the "connected devices", after the success of connected devices, you can see the message "successfully connected devices ... OK!" In the software field below; This parameter can be set after successfully connected.

3.2.2 Serial baud rate

Serial baud rate refers to the computer and the CM-320 communication speed, it supports a variety of baud rate, the range is 300bps ~ 115200bps, the default is 9600bps.

3.2.3 Conversion mode

Two conversion modes: transparent transfer, transparent transfer with mark.

- Transparent transfer: CM-320 receiving data from the bus side, and then convert it and immediately sent to the other side of the bus. It will not increase the burden on the user communications, as is to convert the data in real time, can shoulder a greater flow of data.
- Transparent transfer with mark: Transparent transfer with mark is based on common characteristics of the generally data frame and CAN message, So that the two different bus types can be easily set up with a communication network. This approach can will "address" of the serial frame switch to the CAN message ID, Serial frame "address" in the serial frame starting position and length can be configured, so in this way, the module can be adapted to maximize the user's custom protocol.

3.2.4 Conversion direction

- Two-way: Two-way transmit data. CM-320 module can will the serial bus data Conversion to the CAN bus, also can will CAN bus data Conversion to the serial bus.
- Serial to CAN: Unidirectional data transfer. Only will the serial bus data Conversion to CAN bus, don't will the CAN bus data Conversion to serial bus.
- CAN to serial: Unidirectional data transfer. Only will the CAN bus data Conversion to CAN bus, don't will the serial bus data Conversion to serial bus.

3.2.5 The time interval between the serial frame

This option is only available in the "Transparent transfer with mark " mode. The user send the serial frames to the module,the minimum time interval between two serial frames, the time interval in order to "send a single character of the time" for the unit. This can be set to 2 to 15 characters of the time. The user's frame actual interval time and the set time to be consistent, otherwise, may result in incomplete conversion of the frame. "send a single character of the time" means: in the corresponding baud rate, the time required for serial transmission of a character (10 bit). This is divided the corresponding baud rate with 10. For example:under the 9600bps baund rate, ”The time interval between the serial frame” is 4,”send a single character of the time”is(10/9600)s,Get the serial frame's actual time interval is:(10/9600)*4=4.17(ms); That the time interval between two serial frames of at least 4.17ms.

3.3 CAN settings

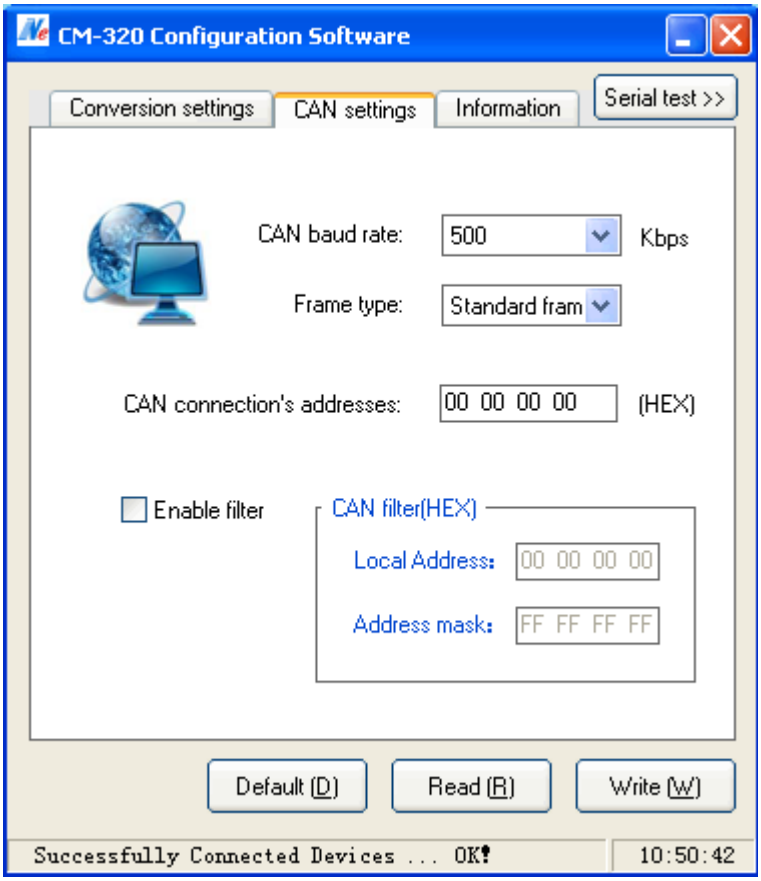

Figure 3.3 CM-320 CAN parameter configuration

3.3.1 CAN baud rate

CAN bus transfer rate, supports standard baud rates range from 100K-1000Kbps. The default is 500Kbps.

3.3.2 Frame type

Conversion CAN message frame type, can select the standard frame and extended frame, does not support remote frames.

- Standard frame: 11-bit identifiers, data frame length is 44 ~ 108, according to the different data streams code, which can be filled into 28-bit, so,the standard data frames Longest is 131 bits.
- Extended frame 29-bit identifiers, data frame length is 64 ~ 128, according to the different data streams code, which can be filled into 28-bit, so,the standard data frames Longest is 156 bits.

3.3.3 CAN connection's addresses

CAN connection’s address only in the "transparent transfer" mode available,that the serial data is converted to CAN packets, CAN message frame identification field (frame ID) value (16 binary data). At this time, serial port to send the data includes the address field and data field; Note that it is invalid in the " Transparent transfer with mark " conversion mode. Frame ID from left to right are ID3, ID2, ID1, ID0. ID3 is the highest byte of the frame. If it is a standard frame, the ID range is 000-7ff; If it is a extended frame, the ID range is 0000-1fffffff. For example, send a standard frame in the transparent mode,frame ID is 0123, then they fill in the CAN connection address is 00000123,as shown in figure 3.4.

CAN connection's addresses:[I] 00 00 01 23 [HEX]

Figure 3.4 CAN connection's addresses

3.3.4 Enable filter

Only the chosen, the receiver filter pattern and the corresponding address mask will work. If you do not want to use the filtering function, so do not choose to receive all of the CAN message. By setting the CAN filter, CAN port can only receive the compliant CAN data packets, which can be divided into several segments CAN bus used to support different applications.

3.3.5 Local Address

Compare value is when receiver the CAN "frame ID",it and "address mask" correspond to each other in accordance with the bit relationship. When the "address mask" is set to a value, the data into the receive buffer of the frame, only to receive the "frame identification (frame ID)" and the set of "Local address" is the same; otherwise not to receive; to achieve the filtering function. Fill the machine address of the data format is 16 hexadecimal form, between each 8-bit bytes using the "white space" separated. Byte from left to right are named ACR3, ACR2, ACR1 and ACR0, ACR3 is the highest bytes. Specific use, please see Figure 3.5.

3.3.6 Address mask

Address mask used to manage the need to filter frame ID, and it managed by bitwise "and computing". When a particular bit is 1 (meaning-related) of the address mask, the frame data into the buffer, only when received "frame ID" is the same and the corresponding bit of the local address; When a particular bit is 0 (means not relevant) of the address mask, the all frame data into the buffer, when received "frame ID" is any value and the corresponding bit of the local address; Byte from left to right are named AMR3, AMR2, AMR1 and AMR0, AMR3 is the highest bytes. Specific use, please see Figure 3.5.

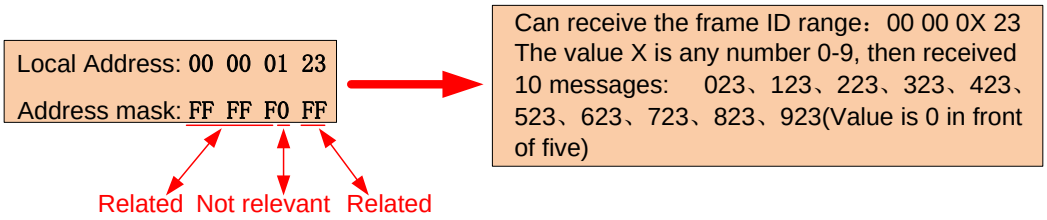

Figure 3.5 Examples of CAN Filter

3.4 Information

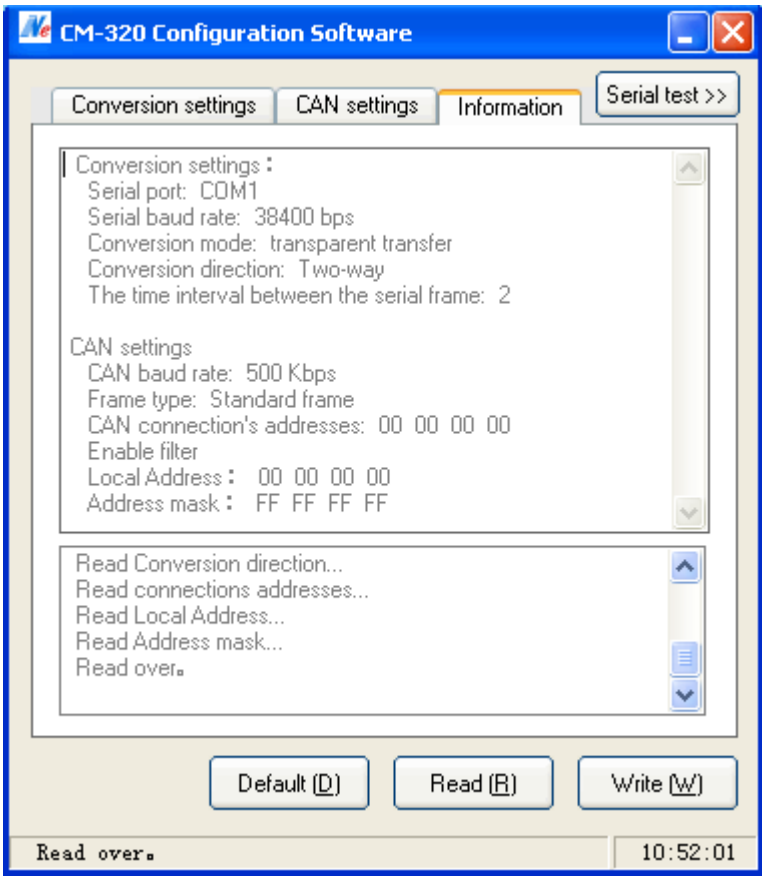

Figure 3.6 Information

(1) Restore default

Parameters can be restored to factory default values.

(2) Read configuration

Read out the existing parameters of the module and displayed on the panel.

(3)Write configuration

Once the parameter settings, click on this button will the configuration parameters write to the module.

4. Use Quick Start

4.1 Transparent transfer mode

4.1.1 The most simple hardware

Figure 4.1, using the CM-320 module, CM-320 module must be added to the user's circuit board. In the circuit board ,at least for the module it is equipped with +5 V DC power supply and nine-pin connector. LED pin indicates the CM-320 working state, the user can not connect to it. Between the two CM-320 module is connected by CAN-bus,the two endpoints of CAN-bus network need to install the termination resistors (the equivalent parallel resistance of 62 ohms). For devices with UART interface, the hardware without changing the structure of the original premise, the TTL level is directly connected with the CM-320 interface, to allow equipment access to CAN-bus communication interface.

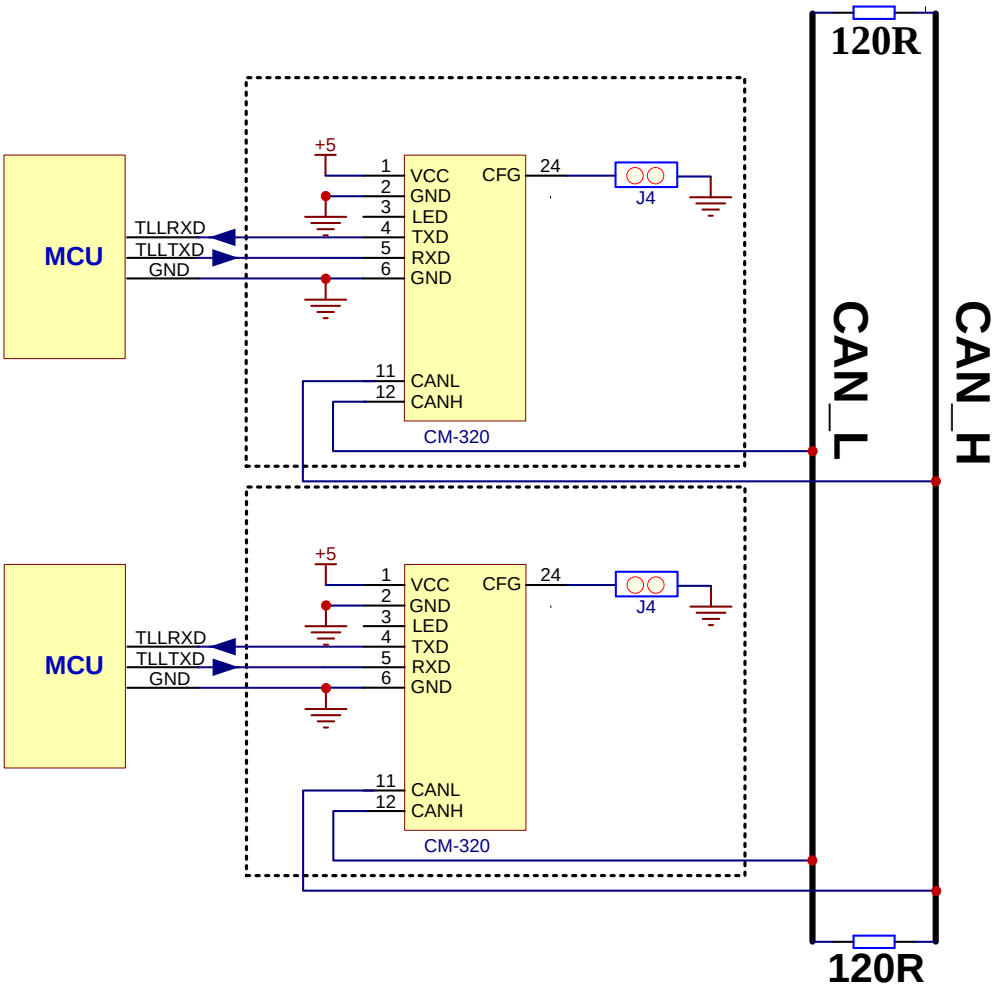

Figure 4.1 Transparent transfer mode,the hardware circuit diagram

4.1.2 CM-320 module configuration parameters

CM-320 modules to ensure the normal use, before use, first use the software to correctly configure the parameters of the CM-320 module (see section III software description). The CM-320 module is configured for transparent transfer mode, UART and CAN communication baud rate configuration according to actual needs.

The serial port baud rate is set to 9600bps; Conversion mode for the transparent transfer mode; Conversion direction is two-way conversion; The time interval between the serial frame is not used in the transparent transfer mode,as the default value of 2, as shown in Figure 4.2.

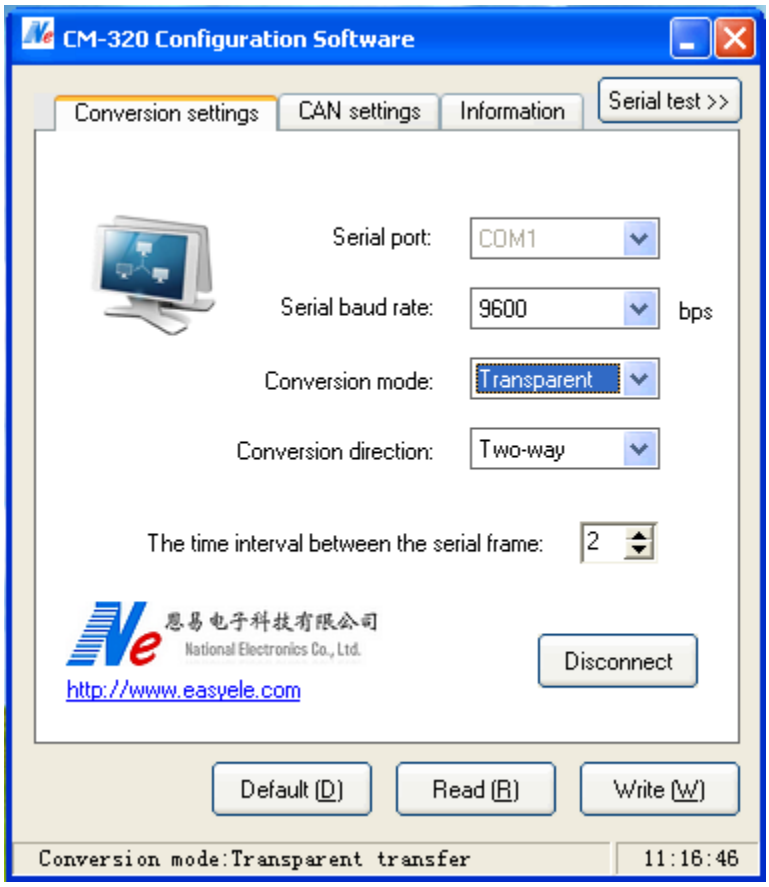

Figure 4.2 Transparent transfer mode, conversion settings

CAN baud rate is set to 500Kbps; the frame type is set as the standard frame; CAN connection address is 00H 00H 00H 00H, filter is not enabled; The configuration is complete, click the write configuration button, as shown in Figure 4.3.

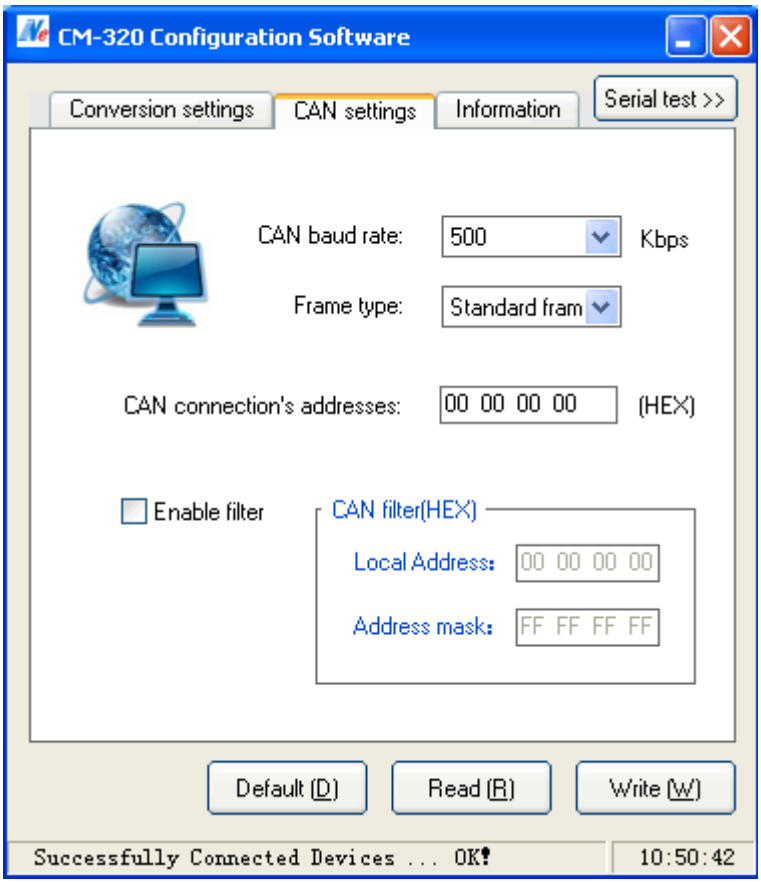

Figure 4.3 Transparent transfer mode, CAN settings

4.1.3 Transparent transfer

Connect the hardware and properly configured CM-320 module parameters; Then, click the Write button to write the configuration parameters in CM320, you will can use the CAN-BUS to transparently transmit as using the UART.

4.2 Transparent transfer with mark mode

4.2.1 Hardware circuit

Figure 4.1, the number of CM-320 module access can bus and using the transparent transfer with mark mode to achieve point to point communications. The same hardware connection circuit and transparent transfer mode, the two endpoints of CAN-bus network need to install the termination resistors (the equivalent parallel resistance of 62 ohms).

4.2.2 CM-320 module configuration parameters

CM-320 modules to ensure the normal use, before use, first use the software to correctly configure the parameters of the CM-320 module (see section III software description). The CM-320 module is configured for transparent transfer with mark mode, UART and CAN communication baud rate configuration according to actual needs. Also need to set the value of each node local address and the address mask.

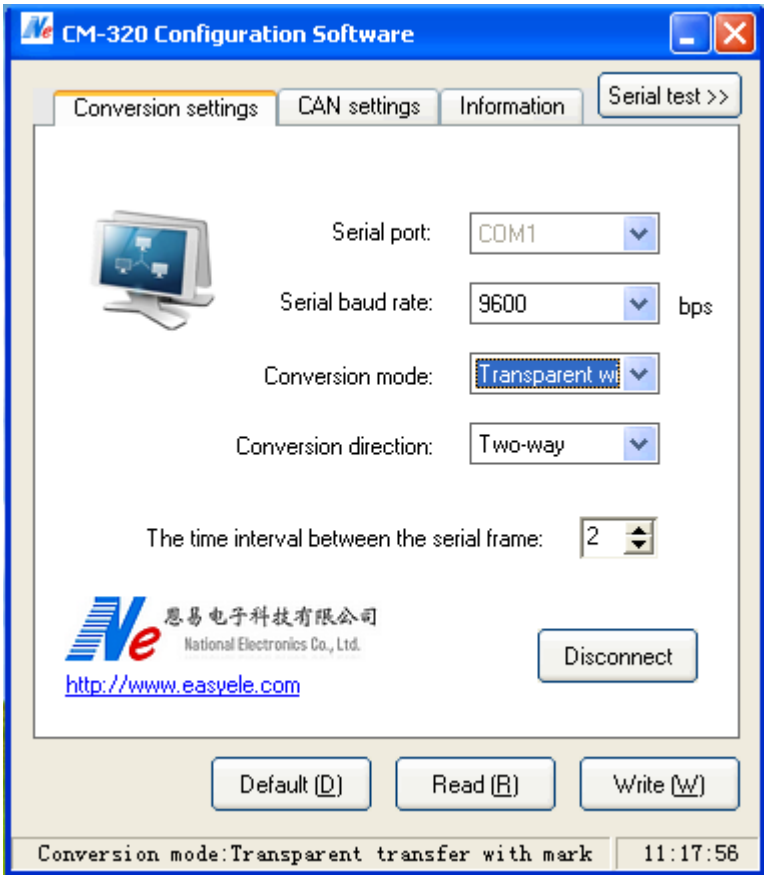

Figure 4.4 Transparent transfer with mark mode, conversion settings

The serial port baud rate is set to 9600bps; Conversion mode for the transparent transfer with mark mode;Conversion direction is two-way conversion; The time interval between the serial frame value is 4, as shown in Figure4.4.

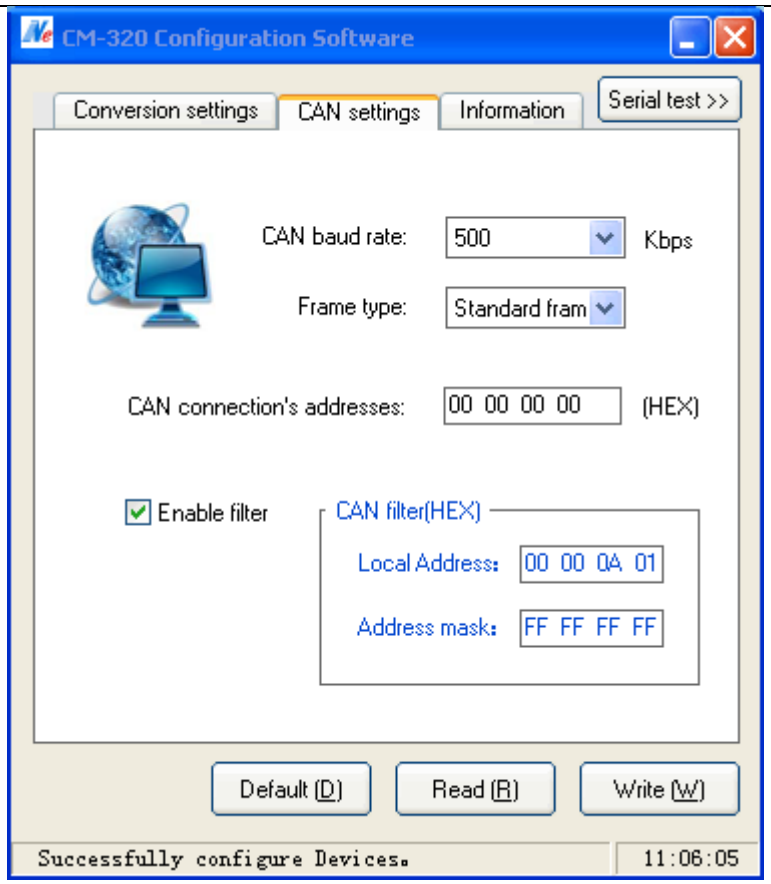

Figure 4.5 Transparent transfer with mark mode, CAN settings

CAN baud rate is set to 500Kbps; the frame type is set as the standard frame; CAN connection address is 00H 00H 00H 00H; filter is enabled,the address mask is FFH FFH FFH FFH(local address all related);Local address is 00H 00H 0AH 01H; Because the frame type is a standard frame, only the the last two bytes of the local address are meaningful, that is, the receiving node ID is 0AH 01H.The configuration is complete, click the write configuration button, as shown in Figure 4.5.

4.2.3 Transparent transfer with mark

Connect the hardware and properly configured CM-320 module parameters, set the receiving node's ID (address) in the beginning of each serial frame, you can achieve point to point communications. For example, need to send the data 0x12, 0x34, 0x56, 0x78, 0x90 to this node , you need to send the serial frame is 0x0A, 0x01, 0x12, 0x34, 0x56, 0x78, 0x90, of which the first two bytes are the node ID , note the time interval between two frames not more than the set value, otherwise it is considered the next frame.

5. Precautions for use

In the "configuration mode" to set the parameters of CM-320 module, the CM-320 module must be re-power, or reset the CM-320 module, you can make CM-320 module is back to normal operating mode.

Recommended to set the CAN baud rate is 2 to 3 times for the UART baud rate to protect data loss does not occur when transferring large quantities of data.

If it is "transparent transfer with mark" mode, once you have set the "time interval between the serial frame" parameter, make sure the serial frame transmission must conform to the configured time requirements.

Because the CAN bus is half duplex, so the data conversion process, try to ensure that both sides of the bus data ordered. If both sides of the bus while sending large amounts of data to the converter, may lead to incomplete data conversion.

6. Service and support

6.1 Technical support:

AVRVi Website : http://www.avrvi.com
http://www.avrvi.net
AVRVi Forum: http://bbs.avrvi.com
AVRVi Shop: http://shop.avrvi.com
Technical Support E-mail: support@avrvi.com
Technical Support Online: MSN Havrvi@homtail.com
Technical Support TEL:0086-531-62327572
Fax:0086-531-80879869
Access to technical support, please provide the following information:

1. Information of the purchaser.

2. A detailed version of the software You are using, you can see it in Help menu.

3. A detailed description of the problem or failure.

6.2 Copyright

This manual belongs to AVRVI company. No part of this manual, including the product and software described in it, may be reproduced, transmitted, transcribed, or translate into any other language in any form or by any means. AVRVI assume no responsibility for any errors which may appear in this manual nor does it make a commitment to update the information herein. AVRVI retains the right to make change to these manual at any time, without notice.

Trademarks:

All product name referenced herein are trademarks of their respective companies.