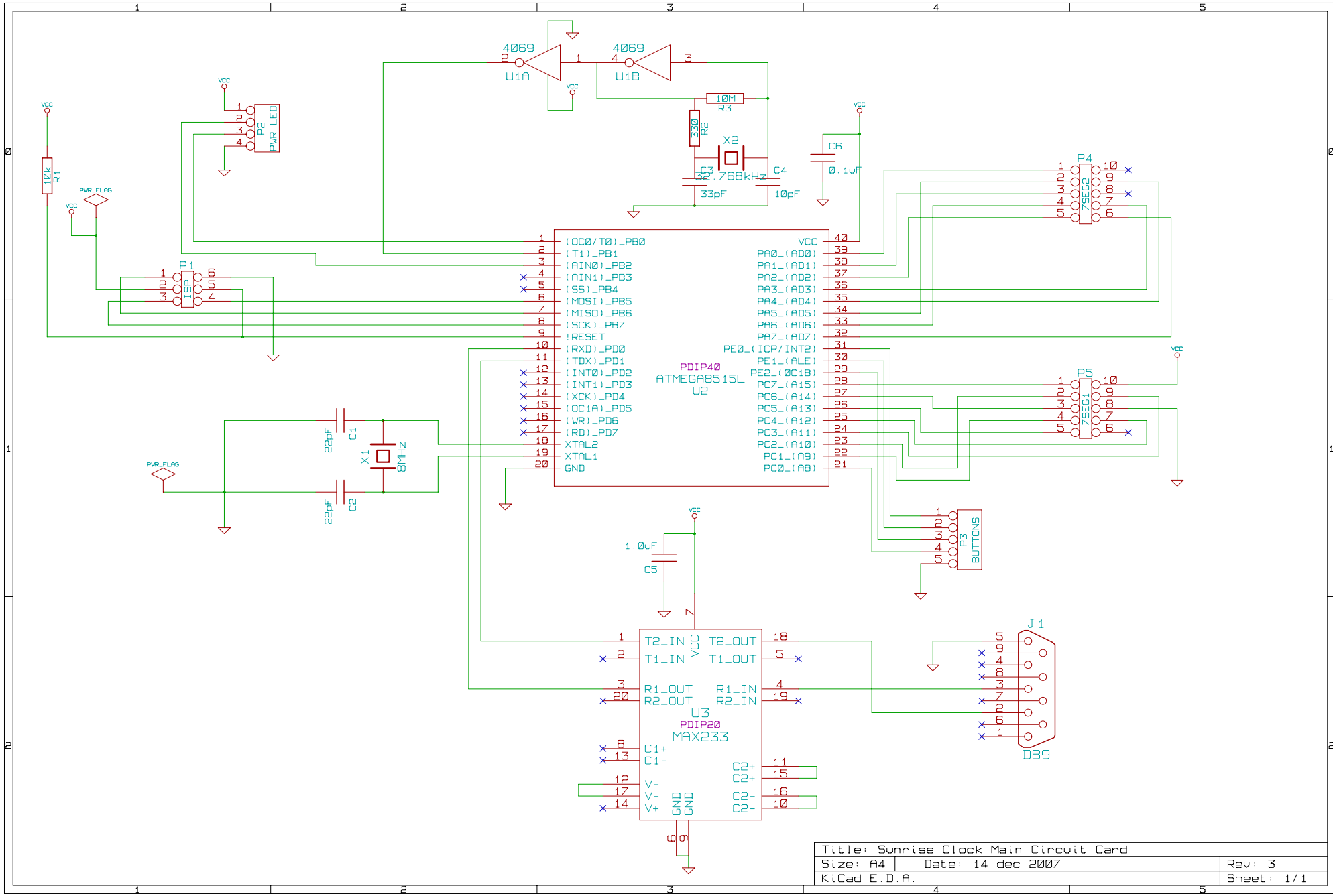

Title: Sunrise Clock Main Circuit Card		
Size: A4	Date: 14 dec 2007	Rev: 3
KiCad E.D.A.		Sheet: 1/1