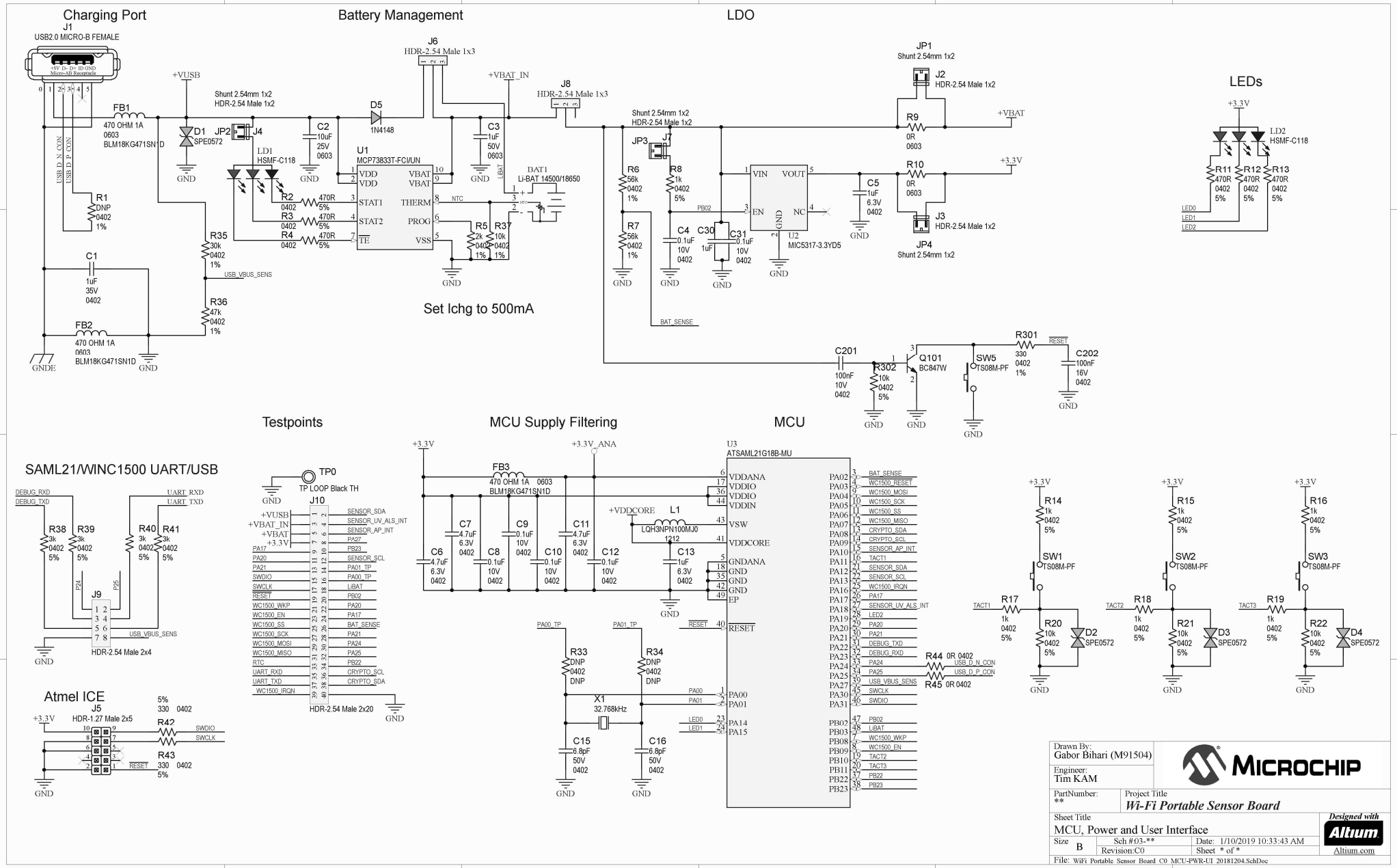
Charging Port
Battery Management
LDO
LEDs
J1
USB2.0 MICRO-B FEMALE
FB1
470 OHM 1A
0603
BLM18KG471SN1D
D1
SPE0572
JP2
J4
LD1
HSMF-C118
R1
DNP
0402
1%
C1
1uF
35V
0402
FB2
470 OHM 1A
0603
BLM18KG471SN1D
R35
30k
0402
1%
R36
47k
0402
1%
USB_VBUS_SENS
USB_D_N_CON
USB_D_P_CON
+VUSB
Shunt 2.54mm 1x2
HDR-2.54 Male 1x2
C2
10uF
25V
0603
D5
1N4148
J6
HDR-2.54 Male 1x3
U1
MCP73833T-FCI/UN
VDD
VDD
STAT1
STAT2
TE
VBAT
VBAT
THERM
PROG
VSS
R2
470R
0402
5%
R3
470R
0402
5%
R4
470R
0402
5%
R5
2k
0402
1%
R37
10k
0402
1%
NTC
C3
1uF
50V
0603
LIBAT
+VBAT_IN
J8
HDR-2.54 Male 1x3
BAT1
Li-BAT 14500/18650
Set Ichg to 500mA
JP3
J7
R6
56k
0402
1%
R7
56k
0402
1%
R8
1k
0402
5%
PB02
C4
0.1uF
10V
0402
C30
1uF
C31
0.1uF
10V
0402
BAT_SENSE
VIN
VOUT
EN
GND
NC
U2
MIC5317-3.3YD5
C5
1uF
6.3V
0402
JP1
Shunt 2.54mm 1x2
J2
HDR-2.54 Male 1x2
R9
0R
0603
+VBAT
R10
0R
0603
+3.3V
J3
HDR-2.54 Male 1x2
JP4
Shunt 2.54mm 1x2
+3.3V
LD2
HSMF-C118
R11
470R
0402
5%
R12
470R
0402
5%
R13
470R
0402
5%
LED0
LED1
LED2
C201
100nF
10V
0402
R302
10k
0402
5%
Q101
BC847W
SW5
TS08M-PF
R301
330
0402
1%
RESET
C202
100nF
16V
0402
GNDE
Testpoints
MCU Supply Filtering
MCU
SAML21/WINC1500 UART/USB
DEBUG_RXD
DEBUG_TXD
UART_RXD
UART_TXD
R38
3k
0402
5%
R39
3k
0402
5%
R40
3k
0402
5%
R41
3k
0402
5%
P24
P25
J9
HDR-2.54 Male 2x4
USB_VBUS_SENS
TP0
TP LOOP Black TH
J10
HDR-2.54 Male 2x20
+VUSB
+VBAT_IN
+VBAT
+3.3V
PA17
PA20
PA21
SWDIO
SWCLK
RESET
WC1500_WKP
WC1500_EN
WC1500_SS
WC1500_SCK
WC1500_MOSI
WC1500_MISO
RTC
UART_RXD
UART_TXD
WC1500_IRQN
SENSOR_SDA
SENSOR_UV_ALS_INT
SENSOR_AP_INT
PA27
PB23
SENSOR_SCL
PA01_TP
PA00_TP
LIBAT
PB02
PA20
PA17
BAT_SENSE
PA21
PA24
PA25
PB22
CRYPTO_SCL
CRYPTO_SDA
Atmel ICE
J5
HDR-1.27 Male 2x5
+3.3V
R42
330
0402
5%
R43
330
0402
5%
SWDIO
SWCLK
RESET
FB3
470 OHM 1A
0603
BLM18KG471SN1D
+3.3V_ANA
C6
4.7uF
6.3V
0402
C7
4.7uF
6.3V
0402
C8
0.1uF
10V
0402
C9
0.1uF
10V
0402
C10
0.1uF
10V
0402
C11
4.7uF
6.3V
0402
C12
0.1uF
10V
0402
C13
1uF
6.3V
0402
+VDDCORE
L1
LQH3NPN100MJ0
1212
U3
ATSAML21G18B-MU
VDDANA
VDDIO
VDDIO
VDDIN
VSW
VDDCORE
GNDANA
GND
GND
GND
EP
RESET
PA00
PA01
PA14
PA15
R33
DNP
0402
DNP
R34
DNP
0402
DNP
X1
32.768kHz
C15
6.8pF
50V
0402
C16
6.8pF
50V
0402
LED0
LED1
PA02
PA03
PA04
PA05
PA06
PA07
PA08
PA09
PA10
PA11
PA12
PA13
PA16
PA18
PA19
PA20
PA21
PA22
PA23
PA24
PA25
PA27
PA30
PA31
PB02
PB03
PB08
PB09
PB10
PB11
PB22
PB23
TACT1
TACT2
TACT3
R44
0R 0402
R45
0R 0402
USB_D_N_CON
USB_D_P_CON
SWCLK
SWDIO
R14
1k
0402
5%
SW1
TS08M-PF
R17
1k
0402
5%
R20
10k
0402
5%
D2
SPE0572
R15
1k
0402
5%
SW2
TS08M-PF
R18
1k
0402
5%
R21
10k
0402
5%
D3
SPE0572
R16
1k
0402
5%
SW3
TS08M-PF
R19
1k
0402
5%
R22
10k
0402
5%
D4
SPE0572
Drawn By:
Gabor Bihari (M91504)
Engineer:
Tim KAM
PartNumber:
**
Project Title
Wi-Fi Portable Sensor Board
Sheet Title
MCU, Power and User Interface
Size
B
Sch #03-**
Revision:C0
Date: 1/10/2019 10:33:43 AM
Sheet * of *
File: WiFi Portable Sensor Board C0 MCU-PWR-UI 20181204.SchDoc
MICROCHIP
Designed with
Altium
Altium.com