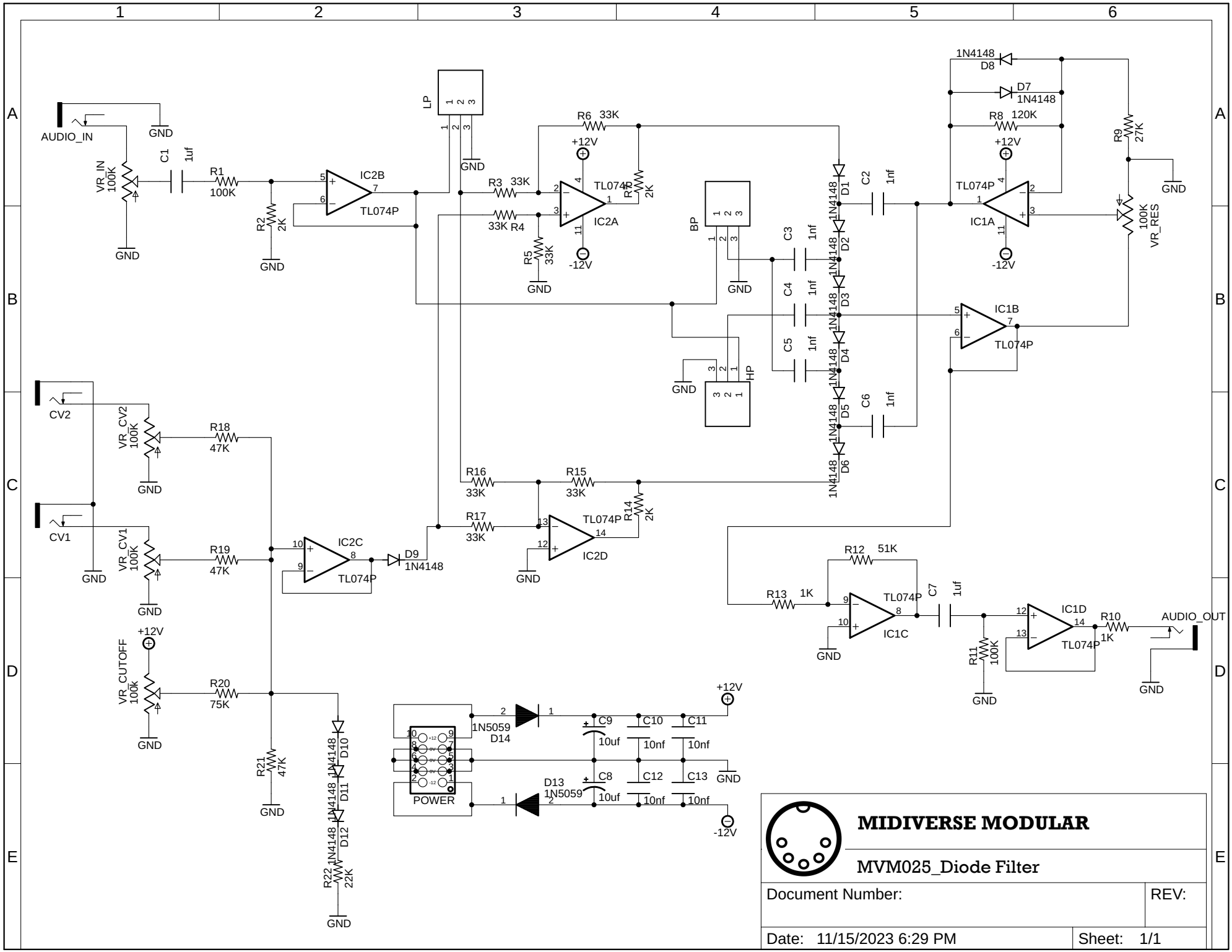
AUDIO_IN
GND
VR_IN 100K
C1 1uf
R1 100K
R2 2K
IC2B
TL074P
LP
R6 33K
+12V
R3 33K
33K R4
R5 33K
IC2A
R7 2K
-12V
BP
HP
C3 1nf
C4 1nf
C5 1nf
C6 1nf
C2 1nf
D1 1N4148
D2 1N4148
D3 1N4148
D4 1N4148
D5 1N4148
D6 1N4148
D7 1N4148
D8 1N4148
R8 120K
R9 27K
IC1A
IC1B
100K VR_RES
CV2
VR_CV2 100K
R18 47K
CV1
VR_CV1 100K
R19 47K
IC2C
D9 1N4148
R16 33K
R15 33K
R17 33K
IC2D
R14 2K
VR_CUTOFF 100k
R20 75K
R21 47K
D10 1N4148
D11 1N4148
D12 1N4148
R22 22K
R12 51K
R13 1K
IC1C
C7 1uf
R11 100K
IC1D
R10 1K
AUDIO_OUT
POWER
1N5059 D14
D13 1N5059
C9 10uf
C8 10uf
C10 10nf
C11 10nf
C12 10nf
C13 10nf
MIDIVERSE MODULAR
MVM025_Diode Filter
Document Number:
REV:
Date: 11/15/2023 6:29 PM
Sheet: 1/1