| REV. | DESCRIPTION | DRAWN | CHECKED | APPROVED |
|---|---|---|---|---|
| A | NEW RELEASE | LL 09/25/06' | | LJC 09/25/06' |
| B | PLATING CHANGE | JLZ 07/07/15' | | |
| | | | | |
| | | | | |

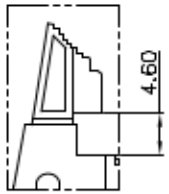


SPECIAL LATCH

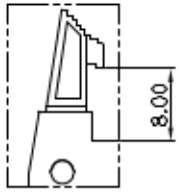


STANDARD LATCH

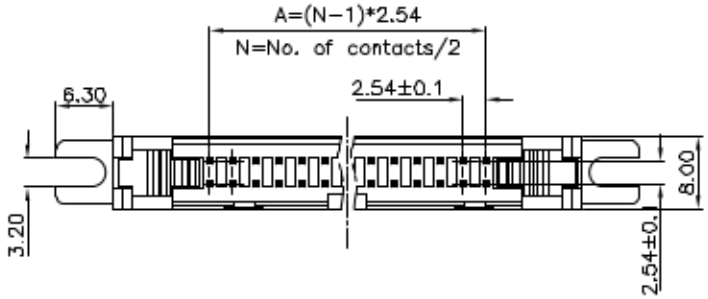


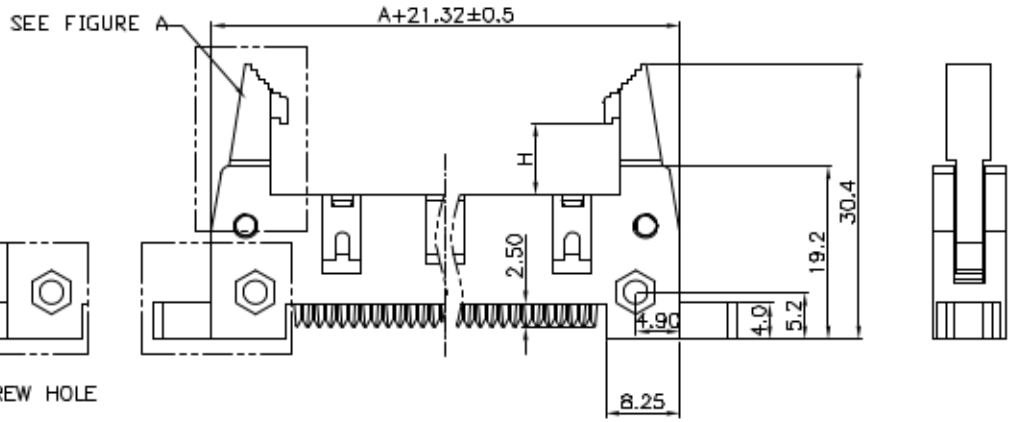


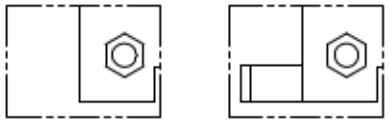

W/O SCREW HOLE W/ SCREW HOLE

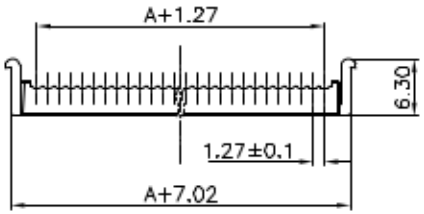


COVER

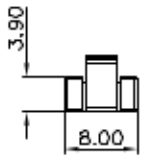


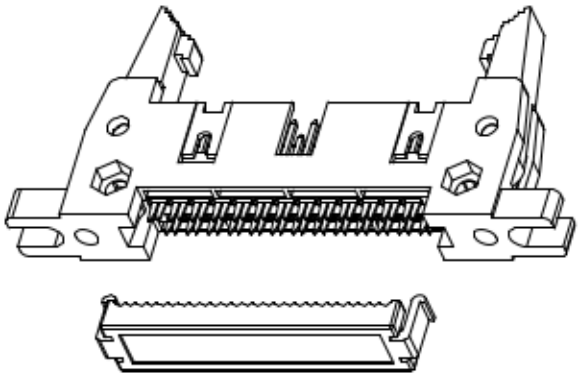

NOTES:

1. MATERIAL
   1.1 INSULATOR:THERMOPLASTIC(UL 94V−0).
   1.2 CONTACT: COPPER ALLOY.
2. SPECIFICATION
   2.1 STORAGE TEMPERATURE:−40°C~+105°C.
   2.2 CONTACT RESISTANCE:20mΩ max.(initial).
   2.3 INSULATION RESISTANCE:1000MΩ min.
   2.4 DIELECTRIC WITHSTANDING VOLTAGE:AC 500V PER MINUTE.
3. PART NUMBER: DS1012
4. PRODUCT NUMBER CODE:

DS1012− X X X X X X X

- LOCK DIM.H
  8: 8.00mm (standard)
  4: 4.60mm (special)
- HOUSING COLOR
  A: GRAY
  B: BLACK
- CONTACT PLATING
  2: GOLD + NICKEL Ⓑ
- STRAIN RELIEF
  N: W/O
- SCREW HOLE
  M: W/
  N: W/O
- EJECTOR TYPE
  L: Long
- No.OF CONTACTS
  10 14 16 24 26
  30 40 50 60 64
- SERIES No.
  DS1012

| GENERAL TOLERANCE | | ANGLE TOLERANCE | |
|---|---|---|---|
| X. | ±0.60 | X. | ±5' |
| .X | ±0.38 | .X | ±3' |
| .XX | ±0.25 | .XX | ±2' |

| | | | |
|---|---|---|---|
| DRAWING TYPE | CUSTOMER | | |
| SCALE | 1:1 | SHEET | 1 OF 1 |
| DRAWING NO. | C−DS1012−XXXXXXX−B | | |

| | | | |
|---|---|---|---|
| PROJECTION | | TITLE | IDC SHROUDED HEADER MATES WITH PITCH 1.27mm FLAT CABLE |
| UNITS | mm | | |
| SHEET SIZE | A4 | SERIES | |