QK-A024/26 Manual

Wireless AIS + GPS Receiver

(GPS: A026 only)

With NMEA Multiplexer + WiFi

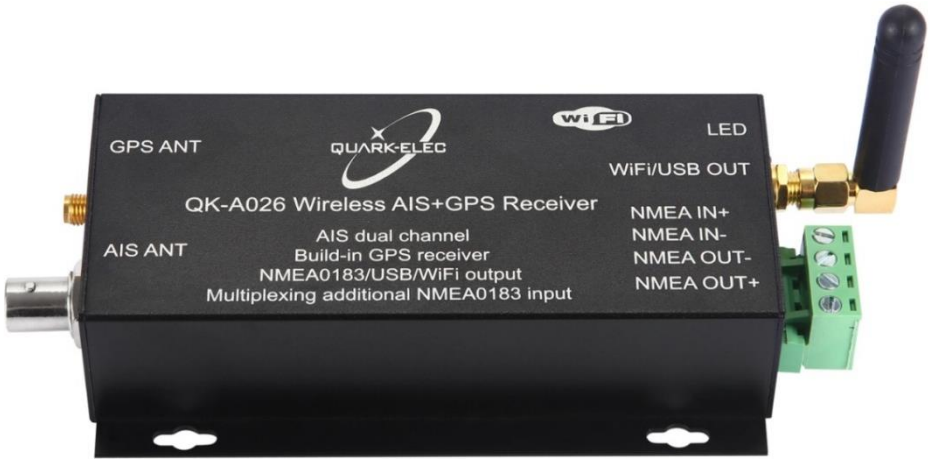

Designed in UK

Features

- Two independent receivers monitoring AIS channels (161.975MHz & 162.025MHz) and decoding both channels simultaneously.
- Sensitivity up to -105 dBm@30% PER
- Up to 22 nautical miles receiving range
- USB 2.0 powered (QK-A024: <120mA@5.0V) (QK-A026: <160mA@5.0V)
- NMEA 0183 message output through WiFi, USB and NMEA 0183
- Built-in GPS to provide positional data (No GPS connection in A024)
- Combines NMEA input (4800bps default, configurable) and AIS messages (+GPS in A026), and outputs as a seamless stream of data
- BNC connector for 50 Ohm VHF antenna
- Powered SMA connector for 50 Ohm GPS antenna
- Ad-hoc and Station operating modes
- The internal WiFi access point connects up to 4 devices simultaneously
- Plug & Play connectivity with chart plotters and PCs
- Compatible with Windows, Mac, Linux, Android and iOS (Initial configuration must be completed using Windows software.)
- This device connects to NMEA 0183 and is compatible with RS422 output devices. NMEA 0183-RS232 devices can connect to our device by using the Protocol Bridge (QK-AS03)
- This device does not come pre-loaded with map data. We advise using openCPN or other similar software for map data. Some Apps may charge for map use

Contents

1. Introduction 3
1.1. What is AIS? 3
1.2. The A024/26 3
1.3. Products covered by this manual 3
2. Connections 4
3. Installation and Operation 5
3.1. Mounting 5
3.2. Power 5
3.3. VHF/AIS Antenna 6
3.4. GPS input (A026 only) 6
3.5. NMEA input and output connection 7
3.5.1. NMEA 0183 Default Baud Rates: 7
3.5.2. NMEA 0183 RS422 / RS232: 7
3.6. WiFi Output 8
3.6.1. WiFi Ad-hoc mode connection 8
3.7. USB connection 9
3.7.1. Will you need a driver to connect via USB? 9
3.7.2. Checking the USB connection (Windows) 9
4. LEDs 11
5. Configuration 11
5.1. Configuring Baud Rates 11
5.2. Configuring Station mode WiFi 12
6. Chart software 13
6.1. Chart Software USB setup (OpenCPN example) 13
6.2. Chart Software WiFi Network Setup (OpenCPN example) 14
6.3. Maps 14
7. Specification 15
8. Limited Warranty and Notices 15
9. Disclaimer 15
10. Document History 16
11. Glossary 16
12. For more info… 16

1. Introduction

1.1. What is AIS?

The marine Automatic Identification System (AIS) is a location and vessel information reporting system. It allows vessels equipped with AIS to automatically and dynamically share and regularly update their position, speed, course and other information such as vessel identity with similarly equipped vessels. Position is derived from the Global Positioning System (GPS) and communication between vessels is by Very High Frequency (VHF) digital transmissions. There are a number of types of AIS device, like Class A transceivers, Class B transceivers/transponders, AIS base stations, Aids to Navigation (AtoN) and AIS receivers.

1.2. The A024/26

The A024/26 is a compact dual channel, marine AIS receiver which can receive information from both AIS frequencies simultaneously.

A024/26 is aimed at the small-commercial, leisure, fishing boat and vessel monitoring markets. Connected to an on-board PC running compatible software, or a chart plotter, AIS data transmitted from ships within range will be displayed on the screen enabling the skipper or navigator to visualize the traffic within VHF range. Using A024/26 can enhance safety at sea by providing proximity, size and directional information from other vessels, improve safety and efficiency in navigation and help protect the marine environment.

It also combines one external NMEA 0183 data source with the AIS and GPS (GPS-A026 only) messages. This single data stream is then transmitted synchronously via NMEA 0183, USB and WiFi. The A026 model includes an integrated GPS module, this provides GPS data to all outputs when it is connected to a GPS antenna (SMA connection type).

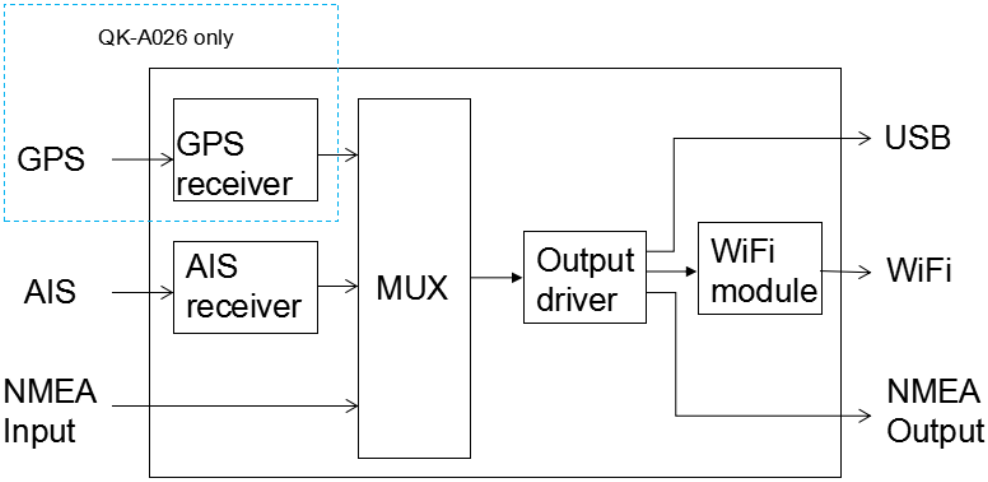

Figure 1: A024/26 Function diagram

1.3. Products covered by this manual

Part No	Description
QK-A024	WiFi Dual channel AIS receiver
QK-A026	WiFi Dual channel AIS receiver with built-in GPS receiver

The only difference between A024 and A026, is that the A026 includes a GPS module (while the A024 does not). All references to GPS throughout the manual refer to the A026. All other specifications and functionality apply to both the A024 and A026.

2. Connections

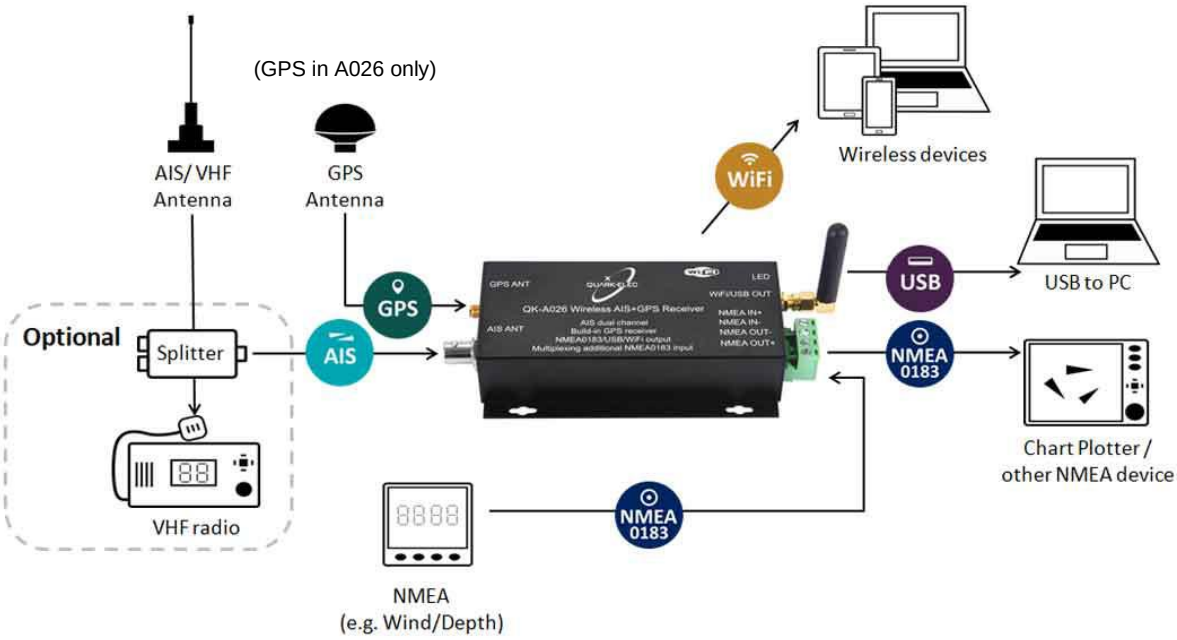

Figure 2: Typical system connection

The A024/26 multiplexer has the following options for connection to inputs, outputs and host devices.

- **AIS antenna connector.** Standard BNC female 50 Ohm connector. An active VHF antenna splitter is required if one VHF antenna is shared by A024/26 and VHF voice radio. (We recommend separate antennas ideally.)
- **GPS connector (A026 only).** Standard SMA female 50 Ohm connector for GPS antenna. An integrated GPS module supplies positional data provided a GPS antenna is connected. GPS information can be output via WiFi, USB or NMEA.
- **NMEA 0183 input/output connectors**. A024/26 can be connected to other AIS compatible equipment, like wind/depth or heading sensors, via the NMEA inputs. The NMEA 0183 messages from these devices can be multiplexed with A024/26 AIS+GPS messages and then sent out through NMEA 0183 to a chartplotter or other NMEA device.
- **USB connector.** A micro USB (type C) connector supplies power to the unit and also outputs the NMEA messages. It can also be used for adjusting parameters using the Configuration software.
- **WiFi.** Connectivity in both Ad-hoc and Station Modes on 802.11 b/g/n provides WiFi output of all messages.
- **LED lights**. A024/26 features three LEDs which indicate power, AIS and GPS status respectively. Three LEDs turn on and then off after initialization. When operating, these LEDs flash. See LED section for more LED information.

3. Installation and Operation

3.1. Mounting

Location: Although A024/26 comes with an extruded aluminium enclosure to shield it from external RF interference, it should not be fitted close to generators or compressors (e.g. refrigerators) as they can generate substantial RF noise. It is designed to be installed in a protected indoor environment. Generally, a suitable placement of A024/26 is together with other types of navigation equipment and the PC or chart plotter that will be used to display the output data. A024/26 is designed to be securely mounted to a suitable bulkhead or shelf in an indoor environment and needs to be placed where it is well protected from humidity and water.

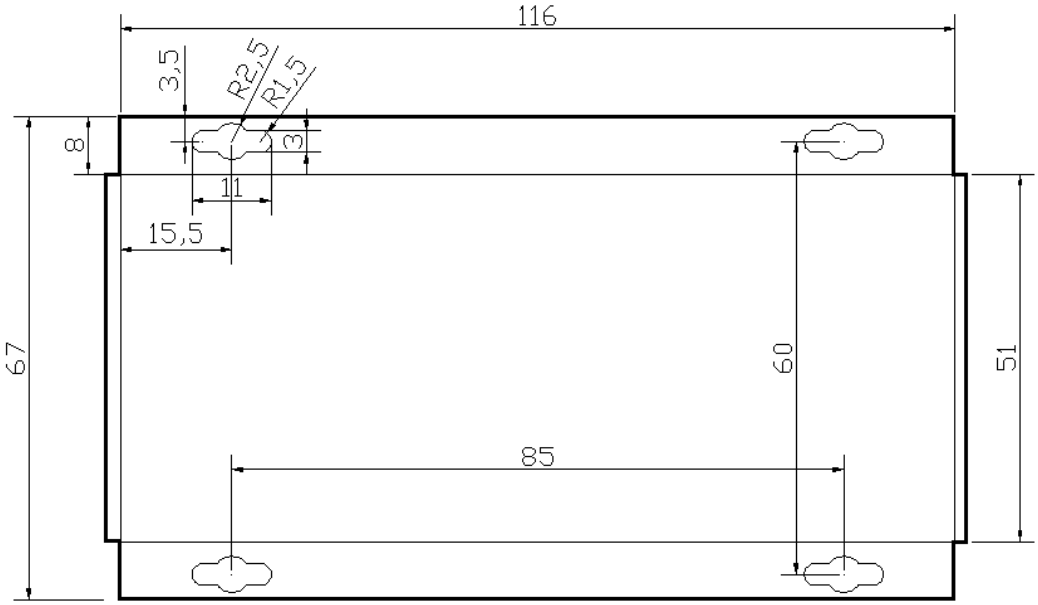

Figure 3: Dimensions

3.2. Power

The A024/26 is typically powered by PC, laptop, tablet or other devices with 5.0V micro USB connector. If USB data output isn't required (data outputs through WiFi or NMEA output port), a power bank or a precise 5.0V supply with greater than 500mA current power source can be applied.
Please note: Ensure you use a reliable, precise 5.0V power supply, or use the QK-A013 12V to 5V low noise converter. A poorly designed power supply could significantly degrade the performance of the receiver.

As an extra precaution, we recommend attaching an additional grounding strap to your vessel—typically to the battery's ground terminal—to help prevent potential damage to your equipment.

3.3. VHF/AIS Antenna

A024/26 is not supplied with a VHF antenna, as the antenna and cable requirements differ from vessel to vessel. A suitable VHF antenna must be connected before the receiver will operate fully.

AIS communication systems use frequencies in the maritime VHF band, which is considered to be ‘line of sight’ radio. This means that if an AIS receiver’s antenna cannot ‘see’ the antennas of other vessels, the AIS signals from vessels will not reach that receiver. In practice, this is not a strict requirement, a few buildings and trees between may be fine. Large obstacles such as hills and mountains, on the other hand, will significantly degrade the AIS signal.

To have the best possible receiving range, the AIS antenna should be placed as high as possible with a relatively clear view of the horizon. Large obstructions might shade the AIS radio communication from certain directions, giving uneven coverage.

VHF antennas can be used for AIS messages or radio communications. One antenna cannot be connected to both AIS and VHF radio equipment unless an active VHF/AIS splitter is used. There are important considerations when deciding whether to use two separate antennas or a combined antenna:

- 2 VHF antennas: The best reception is achieved by using two separate antennas, one for AIS and one for VHF radio. The antennas must be separated as much space as possible (ideally at least 3.0 meters). A good distance between the AIS VHF antenna and the radio communication VHF antenna is required to avoid interference.
- 1 shared VHF antenna: If using only one antenna, e.g. Using an existing VHF radio antenna to receive AIS signals, proper separation equipment (an active VHF Splitter) must be installed between the antenna and the connected equipment.

Figure 4: GPS (SMA) and AIS (BNC) antenna connections

3.4. GPS input (A026 only)

A026 uses a standard SMA female 50 Ohm connector for connecting to a GPS antenna (antenna not included).

For best results, the GPS antenna should be located in ‘line of sight’ of the sky. Once connected to a GPS antenna, the integrated GPS module supplies positional data to the NMEA 0183 output, WiFi and USB, synchronously.

3.5. NMEA input and output connection

NMEA 0183 input/output ports allow for connection to NMEA 0183 instruments and a chart plotter. The built-in multiplexer combines the input NMEA 0183 data (e.g. wind/depth) with the AIS and GPS (A026) data and sends the combined data stream to all outputs, including an NMEA 0183 output port.

3.5.1. NMEA 0183 Default Baud Rates:

'Baud rates' refer to the data transfer speed. When connecting two NMEA 0183 devices, both devices' baud rates, must be set to the same speed.

- A024/26 input port's default baud rate is 4800bps as it is usually connected to low speed NMEA format data instruments, like heading, sounder or wind/depth sensors.
- A024/26 output port's default baud rate is 38400bps. The connected chart plotter should be configured at this rate to receive the proper data as AIS data requires this higher speed.

These are the default baud rate settings and are most likely to be the baud rates required, however, both baud rates are configurable if required. Baud rates can be adjusted using the Configuration software. (See Configuration section)

3.5.2. NMEA 0183 RS422 / RS232:

This product uses the NMEA 0183-RS422 protocol (differential signal), however some chart plotters or devices may use the older NMEA 0183-RS232 protocol (single-ended signal).

Check which protocol your connecting NMEA devices (e.g. Chart plotter/wind sensor) use. If you are unsure whether your connecting devices use the NMEA 0183 RS422 or RS232, the input/output connections on the device will give you some indication.

Unfortunately, manufacturers who use the older RS232 protocol are not consistent in their product labelling. The following table may help you identify which protocol your product uses, however always check the manual to be certain.

RS422 (Differential)	**RS232 (single-ended)**		
TX+ and TX- / RX+ and RX-	TX+ and TX- (GND)	/	RX+ and RX- (GND)
	TXa+ and TXa- (GND)	/	RXa+ and RXa- (GND)
	Output +Ve and –Ve	/	Input +Ve and –Ve
	Occasionally older NMEA 0183 RS232 devices are labelled like RS422 (TX+ and TX- / RX+ and RX-) so check the products' manuals.		

If your connecting device uses the older RS232 protocol, use a QK-AS03 Protocol Bridge for your connection. The QK-AS03 connects and converts RS422 to the older RS232 and visa-versa, through a simple connection, no configuration needed.

3.6. WiFi Output

A024/26 allows users to view their data through WiFi on a PC, tablet, smartphone or other WiFi enabled device. Users can access marine network data including vessel course, speed, position, wind speed, direction, water depth, AIS etc. These can be viewed in the chart software.
The IEEE 802.11b/g/n wireless standard has two basic modes of operation: Ad-hoc mode (peer to peer) and Station mode (also called infrastructure mode).

A024/26 supports 2 modes.

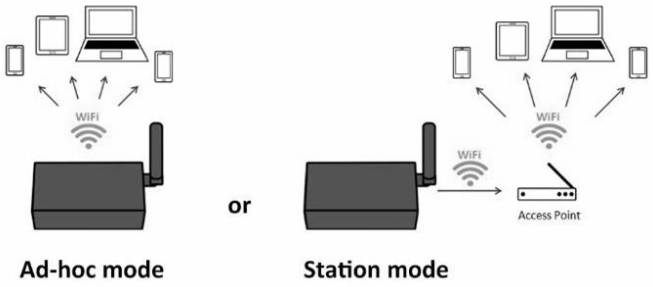

- In **Ad-hoc mode,** wireless devices connect directly (peer to peer) without a router or access point. For example, your smartphone can connect directly to the A024/26 to receiver marine data.
- In **Station mode,** wireless devices communicate through an access point (AP) such as a router that serves as a bridge to other networks (such as the Internet or LAN). This allows your router to handle the data and traffic from your device. This data can then be picked up through your router anywhere on your local area network. Similar to plugging the device directly into the router, but using wireless technology. In this way, the mobile devices receive both your marine data and other AP connections such as Internet.

A024/26 is set to Ad-hoc mode as a default setting, but can be easily setup to Station mode through the configuration tool. (See Configuration section)

3.6.1. WiFi Ad-hoc mode connection

From a Phone, Tablet or PC:
Once the A024/26 has powered up, scan for a WiFi network with an SSID of ‘QK-A026xxxx’ or similar.

Connect to ‘**QK-A026xxxx**’ with the default password: ‘**88888888**’.

A026 SSID	Similar to ‘QK-A026xxxx’
WiFi password	88888888

Note: The SSID and password can be changed if desired. The password must be 8 to 12 characters long. If changing the SSID and password, A024/26 should be reset to activate the settings.
(The IP address, Gateway, Net Mask and Port can be left blank if no fixed IP address is needed.)

In your chart software (or chart plotter):
Set the protocol to ‘**TCP**’, IP address to ‘**192.168.1.100’** and the port number to ‘**2000**’.

Protocol	TCP
IP address	192.168.1.100
Data Port	2000

Note: In Ad-hoc mode, the IP address should not be changed.

With the above settings, a wireless connection is established and the user will receive the data through the chart software. (More information in the Chart software section)

The wireless connection and data flow can be checked with TCP/IP port monitoring software.

To Configure Station mode WiFi see the Configuration section.

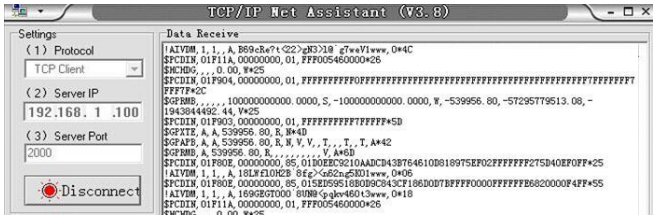

Figure 5: TCP/IP Net Assistant example

3.7. USB connection

A024/26 is supplied with a USB connector. This connector provides power supply, AIS, GPS data output as standard (multiplexed information from other instruments will also be sent via these connections). This USB connector can be linked directly to a USB port on a PC.

3.7.1. Will you need a driver to connect via USB?

To enable the USB data connection of A024/26 to other devices, related hardware drivers may be needed dependent on your system requirements.

Mac:
No driver required. For Mac OS X, the A024/26 will be recognized and shown as a USB modem. The ID can be checked with the following steps:

1. Plug the A024/26 into a USB port and launch Terminal.app.
2. Type: ls /dev/*sub*
3. The Mac system will return a list of USB devices. A024/26 will display as - "/dev/tty.usbmodemXYZ" where XYZ is a number. Nothing further needs to be done if it is listed.

Windows 7,8,10:
The drivers usually install automatically if your device is running an original Windows 10 version. A new COM port will automatically show up in the device manager once powered and connected via USB.

A024/26 registers itself to the computer as a virtual serial com port.

If the driver does not install automatically, it can be found on the included CD and downloaded from www.quark-elec.com.

Linux:
No driver required. When plugged into the computer, A024/26 will show up as a USB CDC device on /dev/ttyACM0.

3.7.2. Checking the USB connection (Windows)

After the driver is installed (if needed), run the Device Manager and check the **COM (port) number**. The port number is the number assigned to an input device. These can be generated randomly by your computer.
Your chart software may require your COM port number in order to access the data.

The port number for the A024/26 can be found in Windows 'Control Panel>System>Device Manager' under 'Ports (COM & LPT)'. Find something similar to 'STMicroelectronics Virtual Com Port' in the list for the USB port. If the port number need to be changed for some reason, double click the A024/26 and select the 'Port Settings' tab. Click the 'Advanced' button and change the port number to the one required.

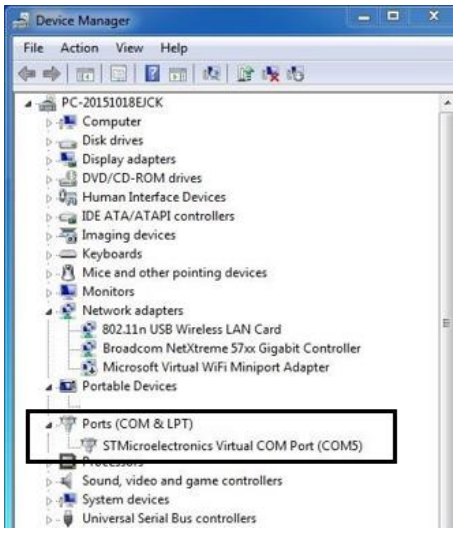

Figure 6: View of COM port in Device Manager

The USB connection status can always be checked with a terminal monitor application like Putty or HyperTerminal. Ensure that the COM Port is set at 38400bps, 8, N and 1 as shown below using HyperTerminal on Windows as an example.

To use a terminal monitor application, first connect A024/26 to the computer, follow the instructions to install the driver if required. After the driver is installed, run the Device Manager and check the COM (Port) number.

HyperTerminal example. Run HyperTerminal, set COM Port settings to 38400bps (if using the default A024/26 settings), 8, N and 1.

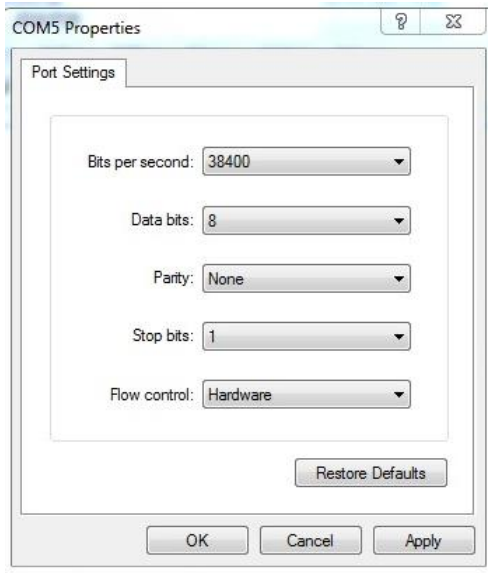

Figure 7: HyperTerminal settings

If all the above is set up correctly, similar AIS messages to the examples below should be shown.

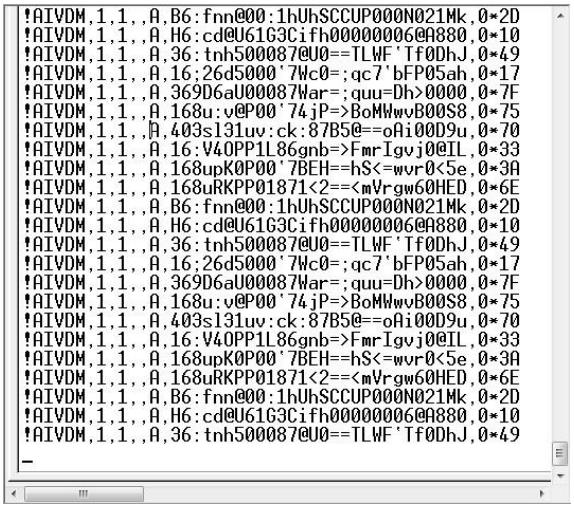

Figure 8: Display on HyperTerminal

4. LEDs

Three LEDs indicate the operation of the A024/26. When operating, these LEDs flash as below:

Figure 9: LED indications

Power: Top LED flashes at 3 second intervals.
AIS: Middle LED Flashes for each valid AIS message received.
GPS: Bottom LED Flashes every second while receiving a valid message (A026 only)

5. Configuration

Quark-Elec Windows configuration tool can be used to setup the NMEA 0183 baud rates and WiFi settings for A024/26.

The free Configuration software comes with the CD provided or is available to download at https://www.quark-elec.com/doc/QE_MUX_configTool.zip

The configuration tool must be used when plugged into a windows PC via USB cable. The tool cannot be accessed via WiFi. For extra instructions for using the configuration tool go to https://www.quark-elec.com/doc/QK-A0xx_GUI_application_note.pdf

The configuration tool must not be opened while other programs are using the A026. Close down all applications using the A024/26 before using the configuration tool.

5.1. Configuring Baud Rates

1. NMEA 0183 input baud rates can be setup from the dropdown menus.
2. When the A024/26 is connected to a computer (Windows system) and powered up, ‘A026 connected’ will be shown at the centre of the bottom and the software version shows at the bottom right. A024/26 can work with the standard NMEA 0183 devices (4800bps) or the high-speed NMEA 0183 devices (38400bps).
3. Select the desired baud rate.
4. Click ‘**Config**’ once you have set the Baud rates for the inputs to save them to the A024/26.
5. Click ‘**Disconnect’**.
6. Re-power the A024/26 to activate the new settings to the device.

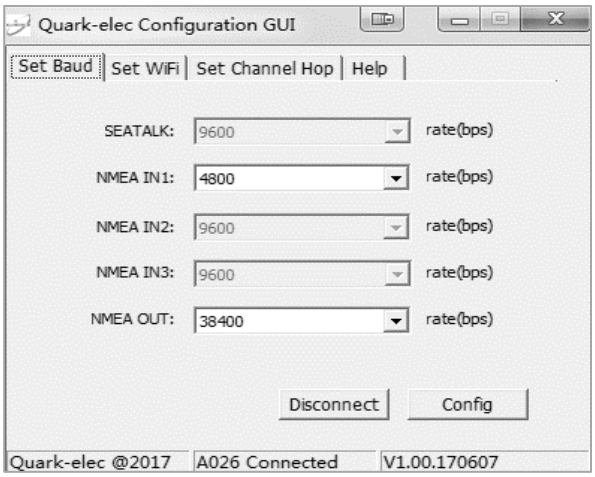

Figure 10: Baud rates settings

5.2. Configuring Station mode WiFi

WiFi is set to Ad-hoc mode as standard (see "WiFi Ad-hoc mode connection" chapter). Station mode however, allows your router/access point to handle the data from your device. This data can then be picked up through your router anywhere on your local area network (Similar to plugging the device directly into the router, but using wireless technology). This allows your mobile device to still receive Internet while viewing your marine data.

More and more vessels have a wireless onboard network for access to the internet. In most cases the network is created by using a 3G/4G connections. iOS devices, tablets, mobile phones can all access the internet to obtain weather forecasts, send/receive email and access many other internet services via onboard WiFi.

Although switching between the A024/26 WiFi network and any onboard wireless network is simple and quick, it can be advantageous to integrate the two networks and allowing operators to receive the A024/26 multiplexer output through the onboard WiFi network. This way, operators can access the Internet while receiving the NMEA 0183 messages without having to switch between the 2 access points. To work in this way, operators should set up the A024/26 in Station mode through A024/26 Configuration software.

To begin setup Station mode the A024/26 should be connected via USB to a computer running Windows (Mac users can use BootCamp).

1. Connect A024/26 to computer via a micro USB connection.
2. Run the Configuration software (having closed any other programs that would access the A024/26) and check connection to the A024/26 at the bottom of configuration tool.
3. Change working mode to '**Station mode'**
4. Enter your router's **SSID.**
5. Enter the **password** for your network.
6. Enter the **IP address** assigned to the A024/26. This normally start with 192.168. The third group of digits depends on your router's configuration (commonly 1 or 0). The fourth group must be a unique number between 0 and 255) This number must not be used by any other equipment connected to your router.

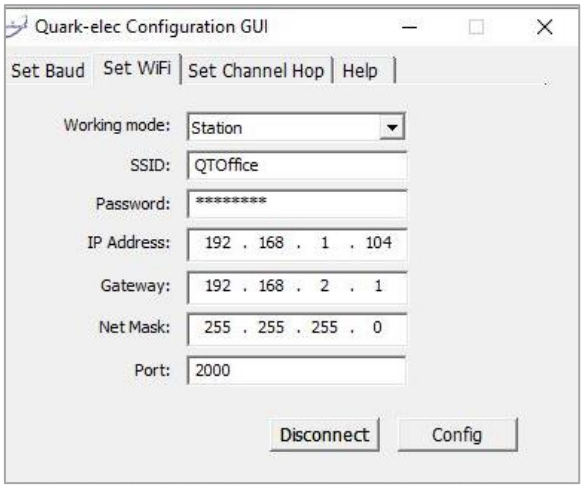

Figure 11: Station mode settings (Example only)

7. Enter your **router's IP address** in the **Gateway** section. This can usually be found under the router. Leave the other settings as they are.
8. Click '**Config'** in the bottom right hand corner and wait 30 seconds. Click '**Disconnect'**.
9. Repower the A024/26 and it will now attempt to connect to the router.

In your chart software, set the protocol as '**TCP**', insert the **IP address** you assigned the A024/26 and enter the Port number as '**2000**'.

You should now see your marine data in your chart software. If not, check your router's **IP address list** and confirm the **IP address** that your router has assigned the A026. Occasionally, a router assigns a different **IP address** to a device than the one you chose to assign it during configuration. If this is the case, copy the IP address from the router into your chart software.
If the **IP address** in the router's **IP address list** matched the one inputted into the chart software, everything will work in Station mode.

If you are not able to view your data in Station mode, the likely cause is either the data has been input incorrectly, or the IP address is different in your chart software to that of your router.

6. Chart software

There is a wide range of chart software is available, for example OpenCPN, Navionics.

- https://opencpn.org/OpenCPN (Open Chart Plotter Navigator) is a free software project to create concise chart plotter and navigation software, for use underway or as a planning tool. OpenCPN is developed by a team of active sailors using real world conditions for program testing and refinement.
- https://www.navionics.com/gbr/apps/navionics-boating

We will use OpenCPN for our example, other software will require similar setup.

The following is a sample setting for the OpenCPN plotter. COM2 was set as the A024/26 input and in this case COM1 was used for a standard serial port GPS input (however, A026 doesn't need a separate GPS input).

6.1. Chart Software USB setup (OpenCPN example)

When you open the software, you will be greeted with a page similar to the one below. (This is the main view of openCPN software.) You now need to add data to openCPN via your Quark-elec instruments.

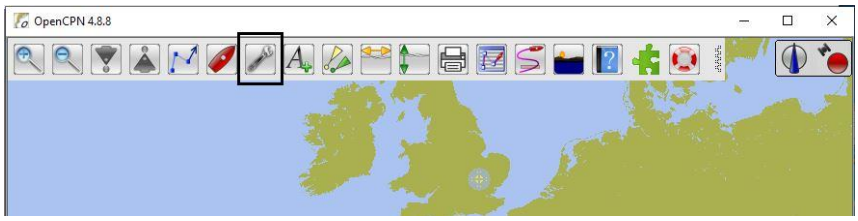

Figure 12: OpenCPN main screen

1. Click on the **'Options'** tab at the top.
2. Select the **'Connections'** from the menu bar.
3. Click on **'Add Connection'** button highlighted in the picture below.
4. Select **'Serial'**
5. Select the **COM** number assigned to A024/26 (See connecting via USB to find the COM Port in device manager).
6. Adjust the Baud rate accordingly (38400 covers AIS).

Click **'Apply'** and then **'OK'**

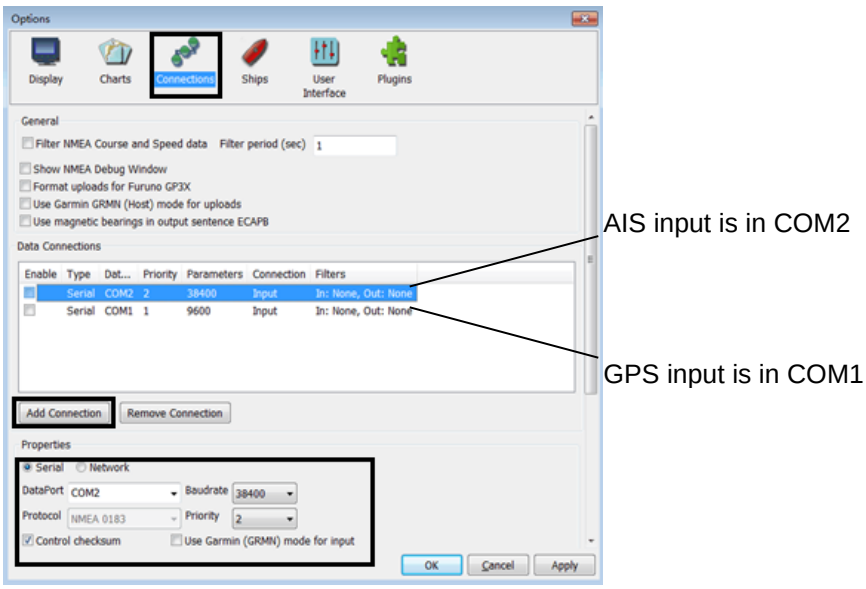

Figure 13: Serial port setting in open CPN (example)

6.2. Chart Software WiFi Network Setup (OpenCPN example)

For WiFi connection, 'Network' rather than 'Serial' needs to be selected in 'Connections->Properties' and the following settings need to be input.

1. Go to the **'Options'** tab as above to set up a wireless network connection.
2. Select **'Connections'** tab at the top of the options menu.
3. Click the '**Add connection**' button.
4. Select **'Network'**
5. Input the Protocol: **TCP**
6. Insert IP address. In Ad-hoc mode (direct WiFi connect) this is **192.168.1.100**. (In Station mode then this will be a different IP address, see WiFi Station Mode section)
7. Input the 'DataPort': **2000**
8. Click **'Apply'** and then **'OK'**

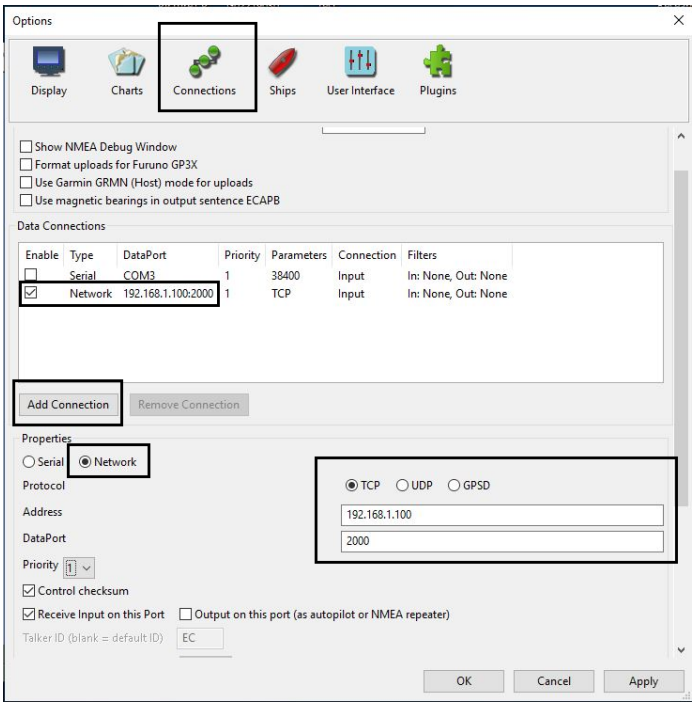

Figure 14: WiFi setting in OpenCPN (example)

6.3. Maps

OpenCPN interface comes with a basic map view. You can easily download more detailed maps.

There are a wide range of free and licensed charts available in different formats via the OpenCPN website at https://opencpn.org/OpenCPN/info/chartsource.html.

A worldwide directory of free nautical charts can also be found on openseachart.org. The collection and the updates are community driven.
These links are for your information only. Quark-elec cannot vouch for the accuracy of their information.

7. Specification

Item	Specification
Frequency bands	161.975MHz &162.025MHz
Operating temperature	-5°C to +80°C
Storage temperature	-25°C to +85°C
DC supply	5.0V(+/-0.2V)
Maximum supply current	120mA (A024), 160mA (A026)
AIS receive sensitivity	-105dBm@30%PER
GPS receiver sensitivity (A026 only)	-162dBm
NMEA data format	ITU/ NMEA 0183 format
NMEA input data rate	4800bps
NMEA output data rate	38400bps
WiFi mode	Ad-hoc and Station modes on 802.11 b/g/n
Security	WPA/WPA2
Network Protocols	TCP

8. Limited Warranty and Notices

Quark-elec warrants this product to be free from defects in materials and manufacture for one year from the date of purchase. Quark-elec will, at its sole option, repair or replace any components that fail in normal use. Such repairs or replacement will be made at no charge to the customer for parts and labour. The customer is, however, responsible for any transportation costs incurred in returning the unit to Quark-Elec. This warranty does not cover failures due to abuse, misuse, accident or unauthorized alteration or repairs. A returns number must be given before any unit is sent back for repair.

The above does not affect the statutory rights of the consumer.

9. Disclaimer

This product is designed to aid navigation and should be used to augment normal navigational procedures and practices. It is the user’s responsibility to use this product prudently. Neither Quark-elec, nor their distributors or dealers accept responsibility or liability either to the products user or their estate for any accident, loss, injury or damage whatsoever arising out of the use or of liability to use this product.

Quark- products may be upgraded from time to time and future versions may therefore not correspond exactly with this manual. The manufacturer of this product disclaims any liability for consequences arising from omissions or inaccuracies in this manual and any other documentation provided with this product.

10. Document History

Issue	Date	Changes / Comments
1.0	31-10-2016	Initial release
2.0	24-10-2018	New 2018 format
3.0	11-02-2020	New 2020 format
4.0	16-04-2025	Power revision.

11. Glossary

IP: internet protocol (ipv4, ipv6).
IP Address: is a numerical label assigned to each device connected to a computer network.
NMEA 0183: is a combined electrical and data specification for communication between marine electronics, where data transfer is one-directional. Devices communicate through talker ports being connected to listener ports.
NMEA 2000: is a combined electrical and data specification for networked communication between marine electronics, where data transfer is one-directional. All NMEA 2000 devices must be connected to a powered NMEA 2000 backbone. Devices communicate both ways with other connected NMEA 2000 devices. NMEA 2000 is also known as N2K.
Router: A router is a networking device that forwards data packets between computer networks. Routers perform the traffic directing functions on the Internet.
USB: cable for communication and power supply between devices.
WiFi - Ad-hoc mode: devices communicate directly with each other without a router.
WiFi - Station mode: devices communicate by going through an Access Point (AP) or router.

12. For more info…

For more technical information and other enquiries, please go to the Quark-elec forum at:
https://www.quark-elec.com/forum/
For sales and purchasing information, please email us: info@quark-elec.com

Quark-elec (UK)
Unit 3, Clare Hall, St Ives Business Park, Parsons Green, St Ives, UK, PE27 4WY
info@quark-elec.com