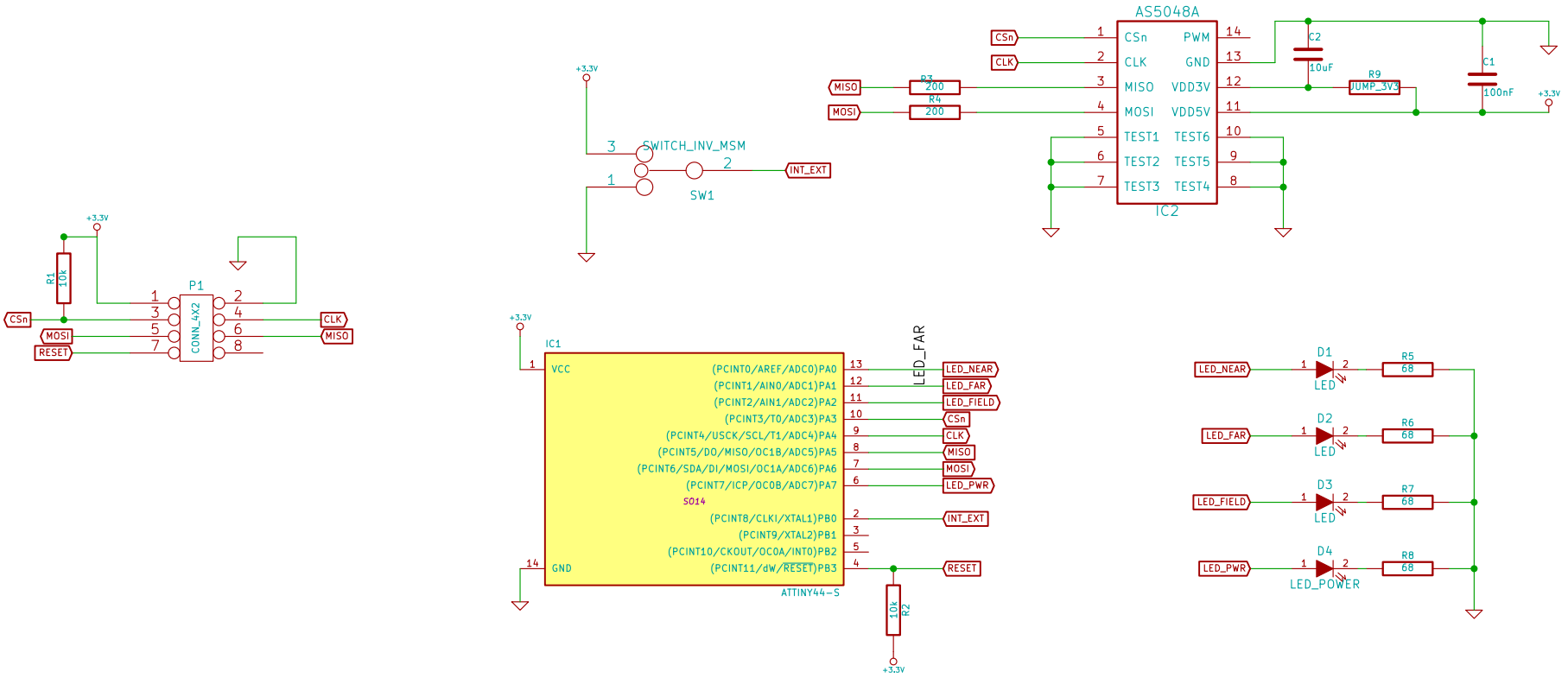


| | | |
|---|---|---|
| File: as5048.sch | | |
| Sheet: / | | |
| Title: | | |
| Size: A4 | Date: 7 oct 2014 | Rev: |
| KiCad E.D.A. | | Id: 1/1 |