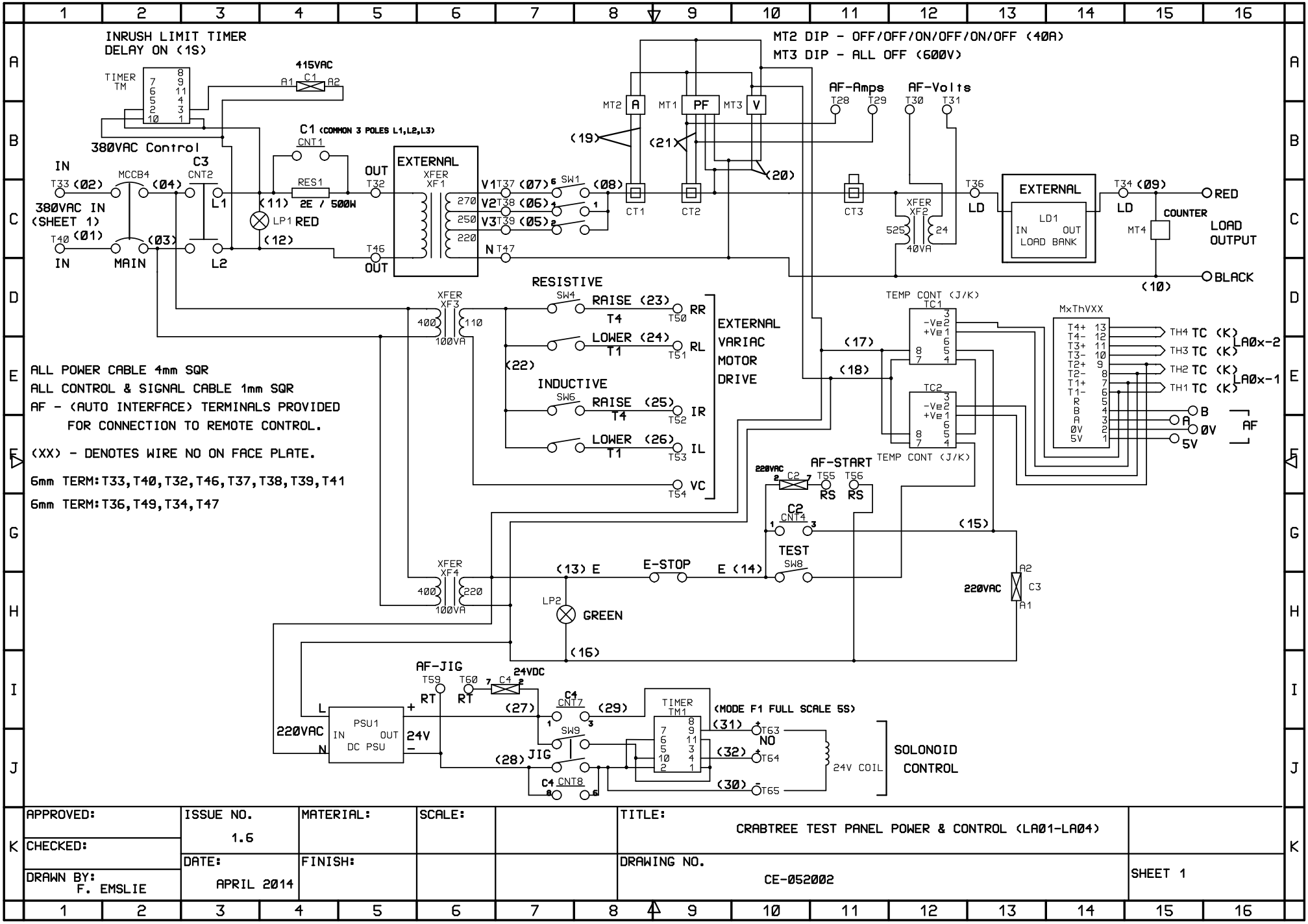

APPROVED:	ISSUE NO. 1.6	MATERIAL:	SCALE:		TITLE: CRABTREE TEST PANEL POWER & CONTROL (LA01-LA04)	
CHECKED:	DATE: APRIL 2014	FINISH:			DRAWING NO. CE-052002	SHEET 1
DRAWN BY: F. EMSLIE						