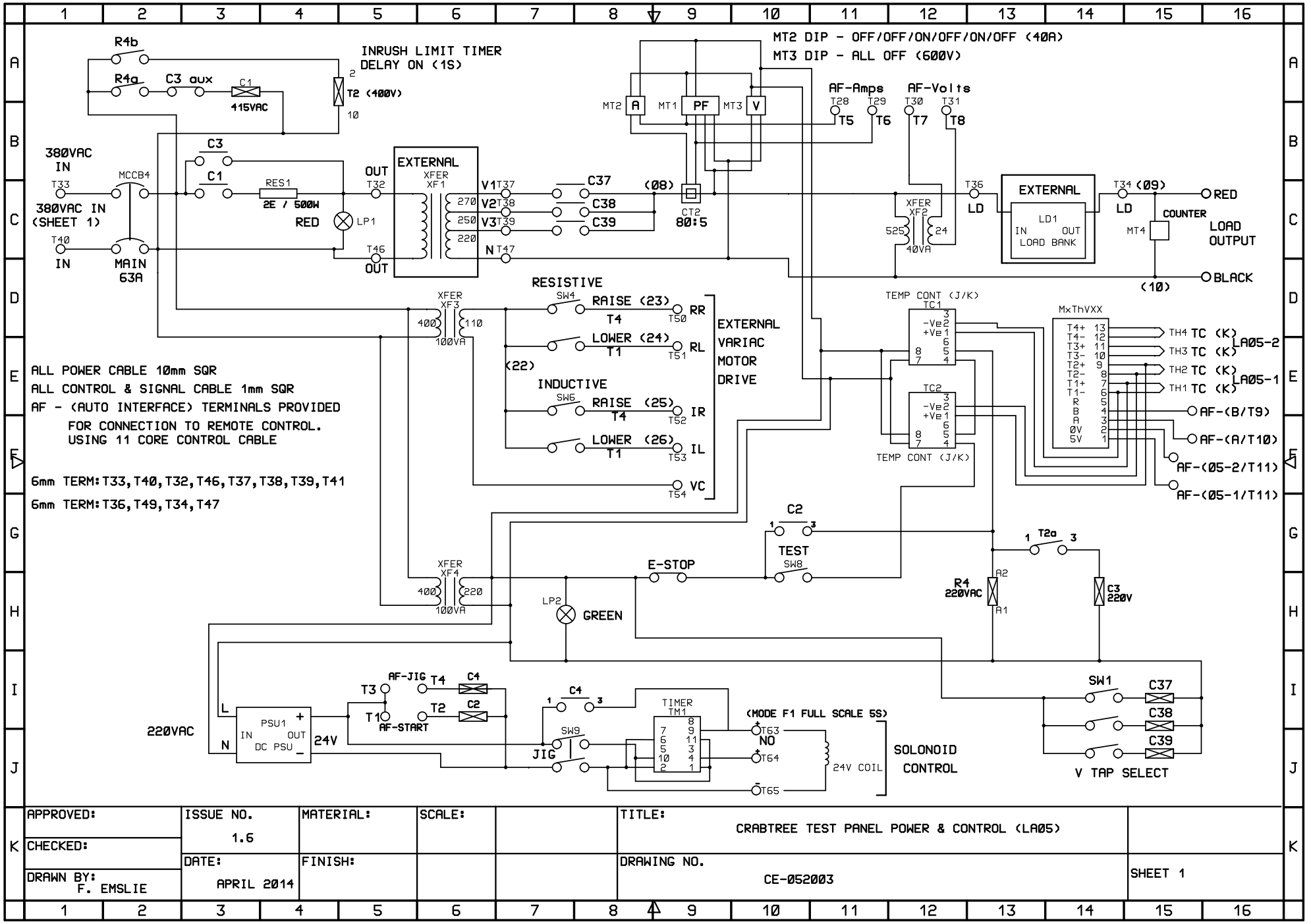

APPROVED:	ISSUE NO. 1.6	MATERIAL:	SCALE:	TITLE: CRABTREE TEST PANEL POWER & CONTROL (LA05)	
CHECKED:	DATE: APRIL 2014	FINISH:		DRAWING NO. CE-052003	SHEET 1
DRAWN BY: F. EMSLIE					