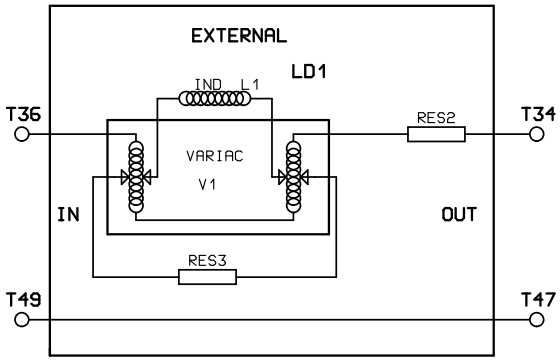

APPROVED:	ISSUE 1.1	MATERIAL:	SCALE:	TITLE: CRABTREE TEST PANEL LOAD BANK	
CHECKED:					
DRAWN BY: F. EMSLIE	DATE: NOV 2011	FINISH:		DRAWING NO. CE-052001	SHEET 1