10) Select the appropriate word(s) to complete the following sentences:

| | |
|---|---|
| a) A double-acting _____ swings in to regulate the stack draft and also swings out to relieve a down-draft into the room: | Chimney |
| b) Many domestic gas burners are of the atmospheric type and require a neutral over fire draft in the combustion chamber. _____ maintains this neutral pressure over the fire: | Natural draft vent |
| c) A _____ with a clay tile liner can be lined with a metallic liner system: | Draft hood |
| d) A _____ relies on the upward movement of hot gases: | Barometric damper |

11) When is a single-acting barometric damper allowed on a propane or natural gas appliance?
   a) When connected to the same chimney as an oil-fired appliance.
   b) For an incinerator only
   c) When connected to the same chimney as a wood-fired appliance.

12) What determines the adjustment of a barometric damper?
   a) The type of burner and combustion chamber and/or the manufacturer's literature.
   b) The damper is preset based on the input of the appliance.

13) How many screws are required at each joint of single wall venting material?
   a) At least two
   b) One to prevent the vent from separating
   c) Three

# 2. Operation and applications of various burners

## Overview

### Purpose

There are countless numbers of burners that provide combustion of fuel gases. A gas technician/fitter encounters many different types. Some designs are simple; some are complex, while the firing rates range from very small to very large. Whatever the purpose of the design, they all must mix fuel and air, ignite and burn it, and then remove the products of combustion (either through natural draft or with the help of a mechanical device). This Chapter examines the classification of burners and describes the operation of common ones found in the gas industry. In all cases, the purpose of performing combustion analysis must be to determine the completeness of combustion and to test for toxic gases.

## Objectives

At the end of this Chapter, you will be able to:

- describe a burner's performance characteristics;
- describe various burner classifications.; and
- describe atmospheric burners.

## Terminology

| Term | Abbreviation (symbol) | Definition |
|---|---|---|
| Venturi effect | | The force of the gas stream from the orifice pulls primary air into a burner as it passes through the centre of a narrowed opening in the burner body. |

# A burner's performance characteristics

## Performance characteristics

The purpose of all burners is to provide complete combustion, stable flames, and quiet operation. To understand fully how a burner operates, look at some of the burner's performance characteristics below.

| Characteristic | Description |
|---|---|
| Complete combustion | A gas burner must be capable of mixing gas and air together to enable complete combustion of the fuel. Combustion should not produce carbon monoxide or other harmful by-products. |
| Rapid carry-over of flames | When ignited, the gas burner flame front must pass smoothly and rapidly over the burner surface. In the case of a multiport burner, the flame front should not delay as it moves from port to port. All ports must ignite. |
| Quiet operation | Burners must ignite quietly either at ignition or during the run cycle. Burner shutdown should also be smooth and quiet, not creating an extinction pop. |
| Immediate ignition | There should be no delay in burner ignition. |
| Stable flames | A burner fired at its designed input with correct air adjustment should produce a stable flame. The flames should stay close to the burner ports and not lift off the burner.<br><br>Also, there should be no burner "flashback." Flashback occurs when a flame front moves back through a burner nozzle, and sometimes back to the air gas mixing point. |

| Characteristic | Description |
|---|---|
| Uniform heating | A burner must provide uniform heating across its surface. Uneven heating can cause excessive stress on heat exchangers and boiler tubes. |
| Wide turndown ratio | Turndown ratio—or turndown rate—is the range of inputs for satisfactory combustion. Many burners operate at a fixed input. Others, such as range-top burners, must vary their input from high to low. A turndown rate of 5 to 1 means the burner input can vary from 20% to 100% of maximum rated input and still maintain stable flames at the burner ports. |

# Burner problems

Table 2-1 lists common burner problems and possible causes. Use this guide when troubleshooting burner problems.

# Cleaning burners

You should clean burners according to the manufacturer's instructions.

**Table 2-1**
**Guide to troubleshooting burner problems**

| Flame type | Problem | Remedy |
|---|---|---|
| Flame lifting | • Noisy<br>• Incomplete combustion<br>• Reduced appliance efficiency | • Reduce primary air<br>• Reduce appliance input |
| Flashback | • Burning inside mixing tube<br>• Incomplete combustion<br>• Sooting of burner | • Increase burner input<br>• Adjust primary air |
| Extinction pop | • Noisy<br>• Pilot outage | • Reduce primary air<br>• Increase gas pressure using a smaller gas orifice size |
| Yellow tipping | • Sooting<br>• Incomplete combustion | • Increase primary air<br>• Clean primary air opening |
| Fluctuating flame | • Possible incomplete combustion if flame impinges on cool surfaces | • Make sure gas pressure is steady at burner orifice<br>• Clean burner orifice for possible blockage |

*(Continued)*

**Table 2-1 (Concluded)**

| Flame type | Problem | Remedy |
|---|---|---|
| Waving flame | • Possible incomplete combustion if flame impinges on a cool surface<br>• Pilot outage | • Correct draft condition<br>• Possible cracked heat exchanger-replace |
| Floating flame | • Severe incomplete combustion<br>• Possible pilot outage | • Reduce overfiring of burner<br>• Remove possible vent and flue blockage<br>• Remove soot or dust to increase secondary air supply |
| Flame roll out | • Possible fire hazard<br>• Scorch appliance finish<br>• Burn wiring and possible control damage<br>• Possible burner flashback | • Reduce overfiring<br>• Remove possible vent and flue blockage<br>• Increase secondary air supply<br>• Employ a 2-step control valve to establish natural draft in appliance before full gas input |
| Normal flame | • Complete combustion<br>• Stable flame<br>• High appliance efficiency | • Correct primary and secondary air supply<br>• Correct firing rate<br>• Adequate venting and clear flue passages |
| Orange flashing flame | • Dust burning in the flame | • Clean burner<br>• Ensure a clean air supply to burner |

# Burner classifications

## Types of burners

CSA B149.1 identifies three burner classifications under its definition of burner. These classifications are based on the delivery of combustion air to the burner and on how the combustion gases move through the appliance. The three classifications are:

- natural draft burners;
- fan-assist burners; and
- forced draft burners.

Although these terms are sometimes used in industry literature, a more common method of classification is based on where gas and air are mixed in the combustion process. The three most commonly used terms to refer to burners in industry literature are:

- atmospheric (or partial premix) burners;

- premix burners; and
- nozzle mix burners.

There is some overlap in the two methods of classification. However, it is worth examining each classification separately and then discussing another common burner term—***power burner***—in light of those discussions.

## Natural-draft burners

A natural-draft burner (see Figure 2-1) does **not** come with a mechanical device for supplying combustion air to the combustion chamber. It is solely dependent on pressure differences that result from natural forces. A natural-draft burner is what you often call an ***atmospheric burner*** or ***inspirating burner***.

The force of the gas stream from the orifice pulls primary air into the burner as it passes through the centre of a narrowed opening in the burner body. This venturi effect can entrain approximately 50% of the air required for complete combustion.

The remaining 50% is delivered to the combustion chamber as secondary air in response to the negative pressure that results from hot flue gases rising through the combustion chamber and vent due to natural draft and/or induced draft as discussed in the *Venting* Chapter.

The *Atmospheric burners* section provides more information on this type of burner.

**Figure 2-1**
**Natural-draft (atmospheric) burner**

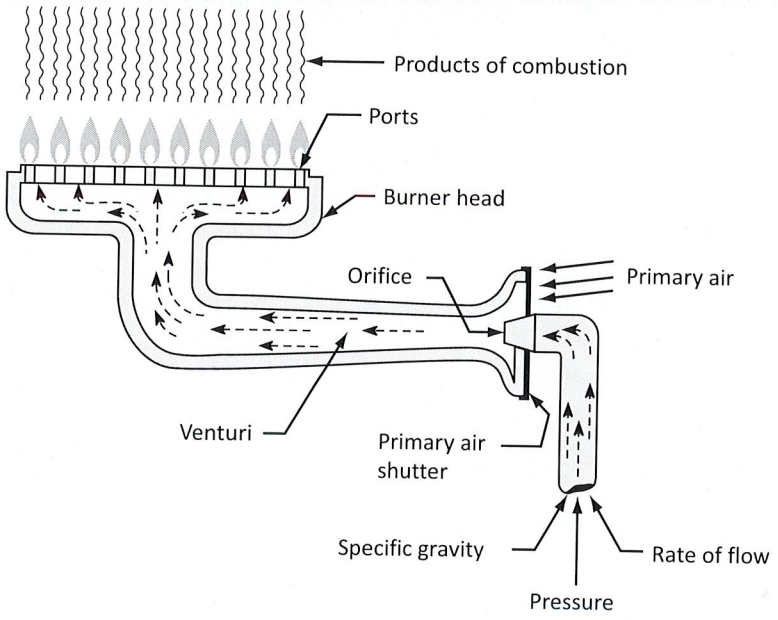


## Fan-assist burners

A fan-assist burner is a burner in which a mechanical device such as a fan or blower supplies the combustion air at sufficient pressure to overcome the **resistance of the burner only**.

**Figure 2-2**
**Fan-assist burner with mechanical air supply fan located downstream of the combustion chamber**

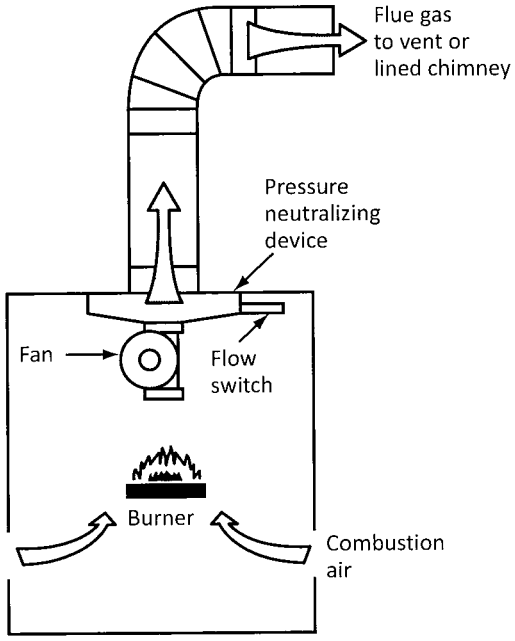


You may place the mechanical device used in a fan-assist burner downstream of the combustion chamber (see Figure 2-2) or upstream (see Figure 2-3). In both cases, the combustion chamber and heat exchanger are under negative pressure compared to the pressure outside of the heat exchanger.

**Figure 2-3**
**Fan-assist burner with mechanical air supply blower located upstream of the combustion chamber**

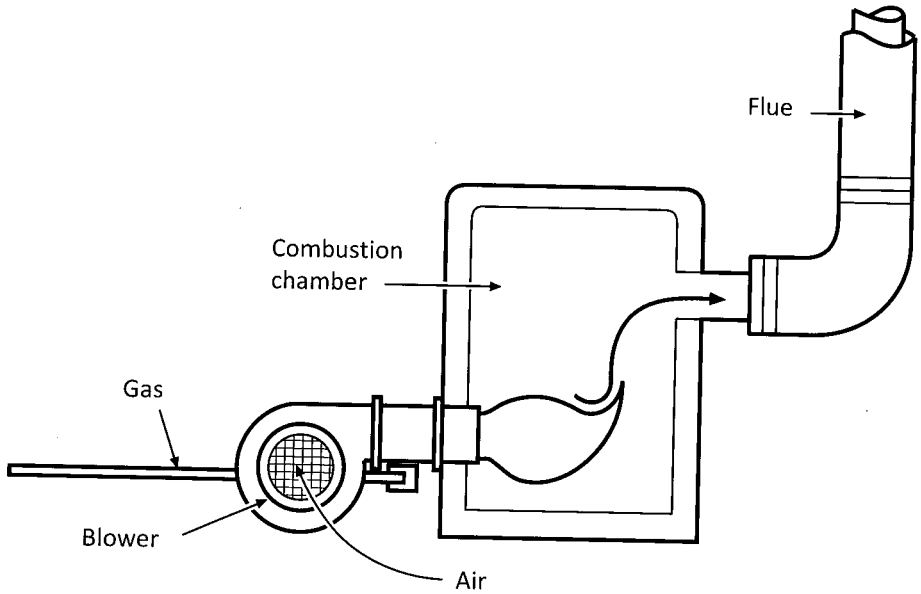


As discussed in Chapter *1. Venting* Chapter, it is important not to confuse mechanical venting systems that help remove the products of combustion—known as induced draft venting or forced draft venting—with mechanical burner systems that provide air for combustion—known as fan-assist burners or burners forced draft.

You may use a mechanical device to introduce air into the burner and/or cause the flue gases to pass through the appliance, but this device might not participate in venting. In these cases, the fan-assist burner or forced draft burner depends on a natural draft venting system to move the products of combustion to the outdoors. See Figures 2-2 and 2-3.

## Forced-draft burners

In the design of a forced-draft burner, a fan or blower supplies combustion air at sufficient pressure to overcome the resistance of the burner and the appliance. The location of the fan or blower is upstream of the combustion zone. See Figure 2-4.

**Figure 2-4**
**Forced-draft burner (fan is upstream)**

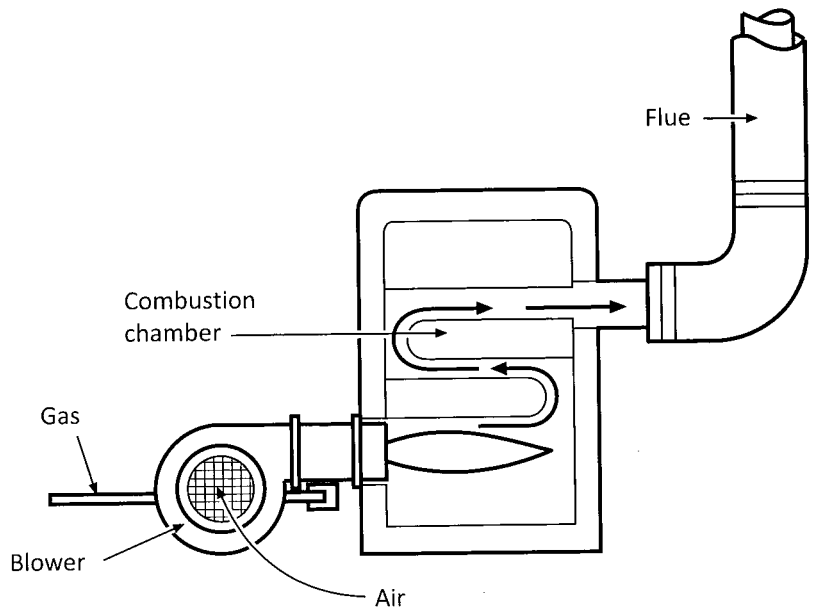


A forced draft burner creates a positive pressure in the combustion chamber and throughout the heat exchanger that usually has a high resistance to flow. In some cases, the design of the blower may be to provide sufficient pressure to overcome the resistance of the venting system as well, in which case you can call it a forced draft burner with a forced draft venting system.

In other cases, the forced draft burner only provides sufficient pressure to overcome the resistance of the burner and the appliance and requires a natural draft or fan-assist venting system to remove the flue gases from the appliance outlet. You would call this type of appliance a forced draft burner with a natural draft (or fan-assist) venting system.

## Atmospheric burners

The terms ***atmospheric burner***, ***inspirating burner***, and ***partial premix burner*** are interchangeable with the term ***natural-draft burner***.

Use all these terms to refer to premix burners that do not come with a mechanical device for supplying combustion air, but rather depend on pressure differences that result from natural forces to deliver primary and secondary air to the burner.

This type of premix burner is in a separate classification from other premix burners that do use a mechanical air supply device to highlight the limitations inherent in the natural air supply design. You can premix only half of the air required for combustion when using natural air flow into a burner.

The necessity to supply the remaining 50% as secondary air at the point of ignition and around the flame requires a negative pressure combustion chamber that limits control over excess air, which is important for appliance efficiency.

The *Atmospheric burners* section provides more information on this type of burner.

# Premix burners

Premix burners use a mechanical device to mix the required amounts of air and gas before ignition. People use these burners on high-efficient direct vent residential appliances and in industrial combustion systems that require a short, hot flame with a high heat release.

There are two main types of premix burners, depending on how you premix the air and gas before ignition:

- aspirator premix burner; and
- blower (or fan) premix burner.

## Aspirator premix burner

The aspirator type of burner (see Figures 2-5 and 2-6) uses air under pressure to entrain gas at atmospheric pressure.

Aspirating burners use a zero governor to regulate the gas supply. As the air pressure increases through the venturi (located in the air-jet mixer), the velocity increases and the pressure drops. The zero governor senses the lowered pressure and opens wider to increase the gas supply. This allows the air-to-gas ratio to stay the same and provide a consistent flame throughout the firing range of the burner.

**Figure 2-5**
**Aspirator industrial premix burner**

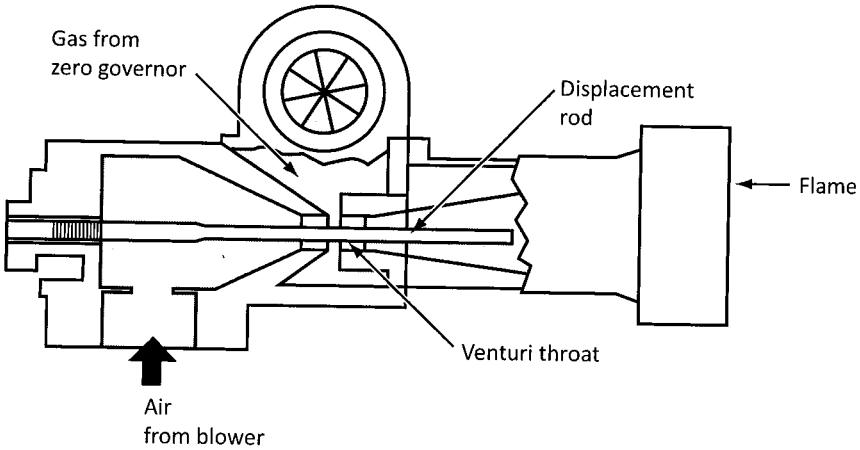


*Courtesy of Honeywell Inc.*

**Figure 2-6**
**Aspirator premix burner with zero governor**

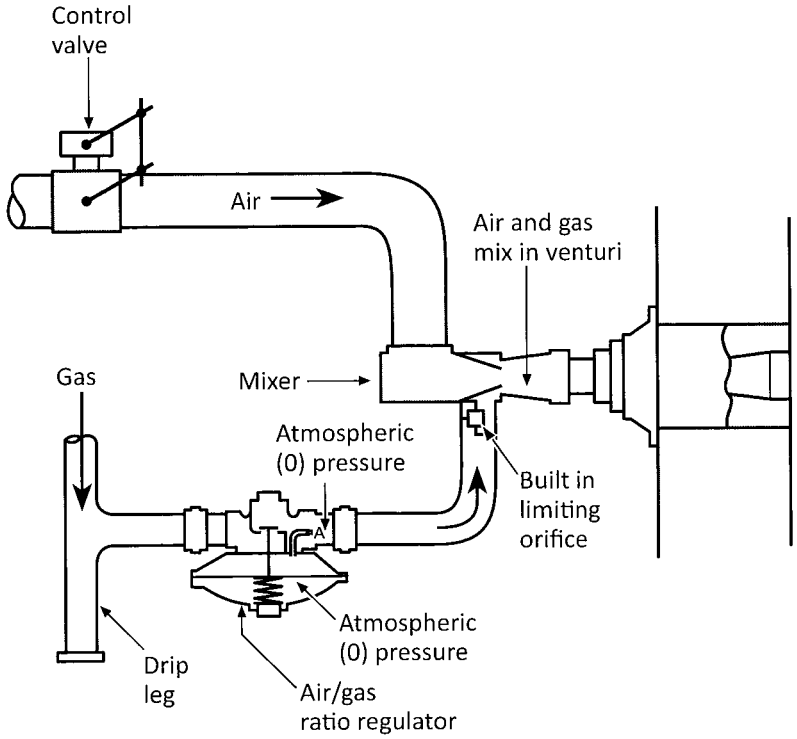


*Courtesy of North American Mfg. (Canada) Inc.*

Industrial aspirator premix burners usually employ a separate component for the zero governor. Residential, or smaller input, appliances usually have the zero governor function incorporated into the combination gas valve . See Figure 2-7.

**Figure 2-7**
**The combination gas valve on a Viessmann matrix burner incorporates a zero governor**

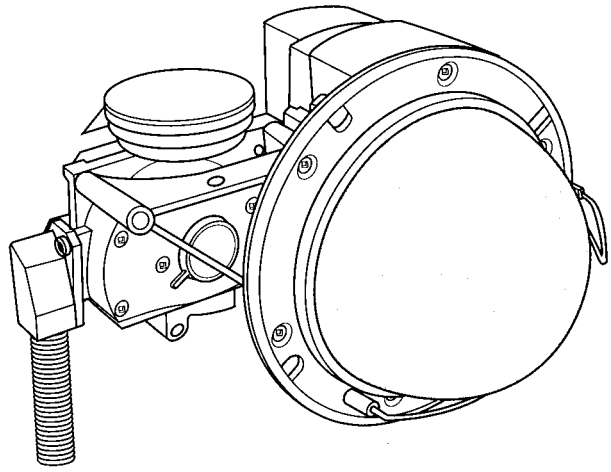

## Blower (or fan) premix burner

The blower-mix or fan-mix burner (see Figure 2-8) provides complete premixing with mechanical mixers. This burner produces and burns mixtures at any pressure:

- to overcome high combustion chamber pressures; or
- to give a wide range of operation to burner equipment.

Energy use is high because of the direct use of the mixture from the mixing machine without any further mixing losses. Because ratio control is accurate and independent of the volume delivered, you may supply a number of burners independently.

**Figure 2-8**
**Blower mix industrial burner**

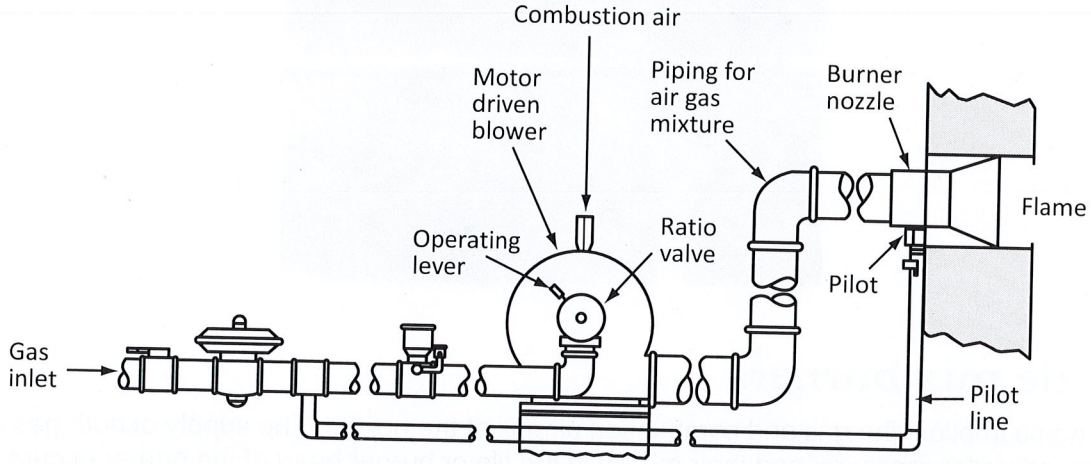


*Courtesy of Honeywell Inc.*

The blower mixer draws in both air and gas at atmospheric pressure. The valve train has a zero governor as a separate component (see above) or as a part of the combination gas valve (see below).

**Figure 2-9**
**Zero governor in combination gas valve supplying gas to a blower premix burner**

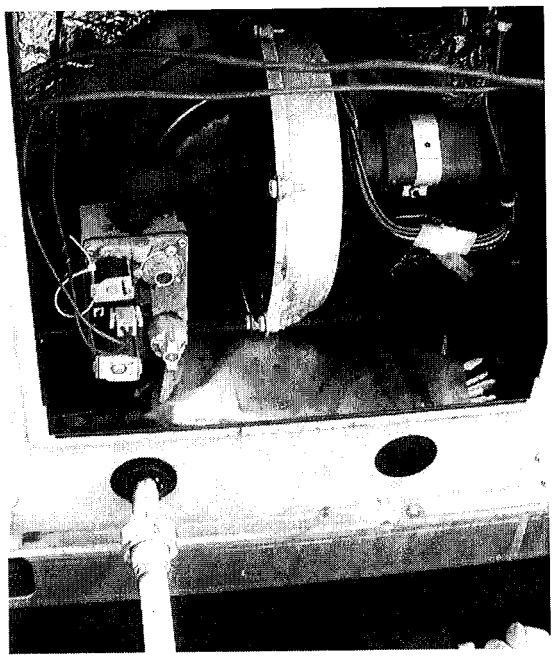

## Nozzle mix burners

As the name implies, the gas and combustion air mix at the nozzle. The supply of both gas and air happens under pressure, and their mixing in the tile or burner head of the burner occurs as they exit the fuel and air nozzles.

**Figure 2-10**
**Nozzle mix burner**

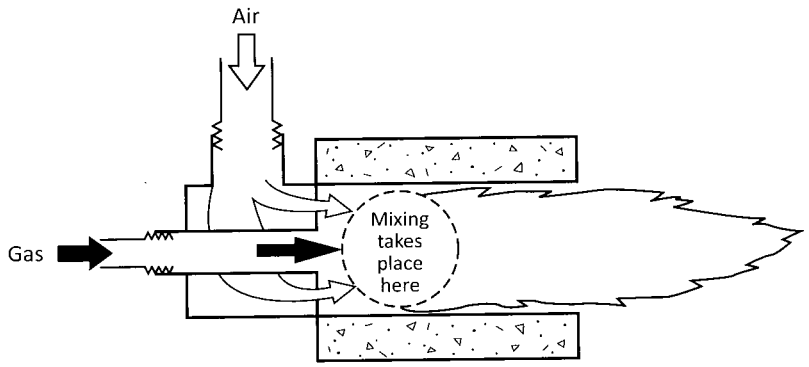


Firing of nozzle-mix burners can be on-ratio, on excess air, or on excess fuel. This fuel/air ratio range is much wider than that for premix burners, because nozzle-mix burners are not as limited by flashback since there is no premixed gas and air in the piping upstream of the burner nozzles.

These burners produce a characteristic "swirling" action to the flame. The flame shape varies with the number and arrangement of gas ports in relationship to the air turbulators. However, the characteristic nozzle mix flame is usually:

- very long—thus requires space and time to complete combustion;
- quite colourful (blue and white with some yellow tips);
- high in radiation heat energy; and
- low in flame temperature compared to premix burners.

Although you most commonly find nozzle mix burners on larger industrial burners, smaller input burners—usually of the ring type as used in boilers, indirect-fired makeup air heaters, and conversion gas burners (see Figure 2-11)—also use these burners.

**Figure 2-11**
**Ring-type nozzle mix burner**

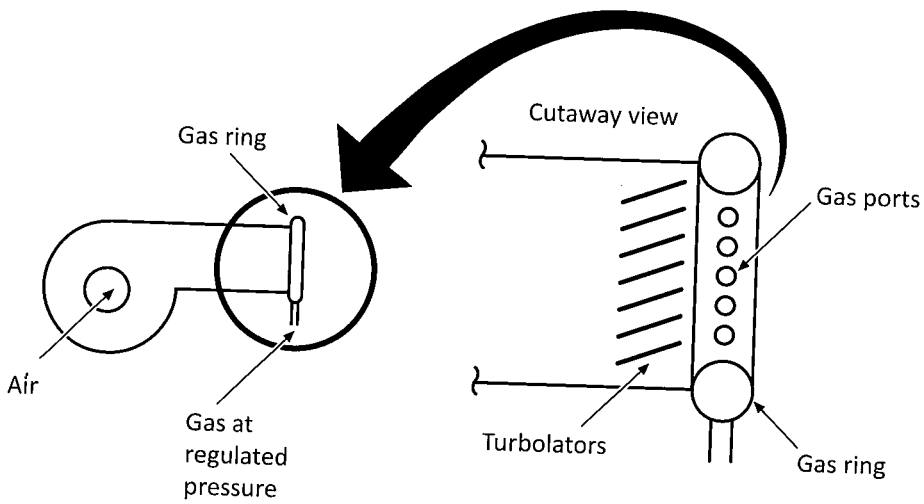


*Courtesy of Honeywell Inc.*

You can provide the air/gas ratio to a nozzle mix burner in a wide variety of ways depending on the burner head design. The two most common proportioning systems are:

- modulating gas valve linking air and gas butterfly valves (see Figure 2-12); and
- modulated air valve with an air/gas ratio regulator (see Figure 2-13).

**Figure 2-12**
**Air to gas ratio to a nozzle mix burner controlled through a modulating motor cross-linked to gas and air butterfly valves**

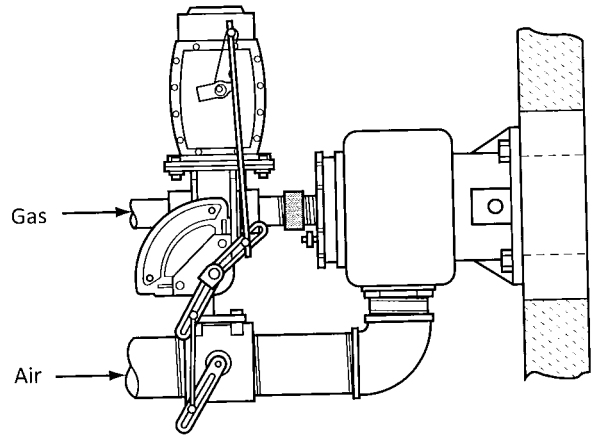


**Figure 2-13**
**Air to gas ratio to a nozzle mix burner controlled through an air/gas ratio regulator cross-linked through an impulse line to a modulated air line**
**Image courtesy of North American Mfg. (Canada) Inc.**

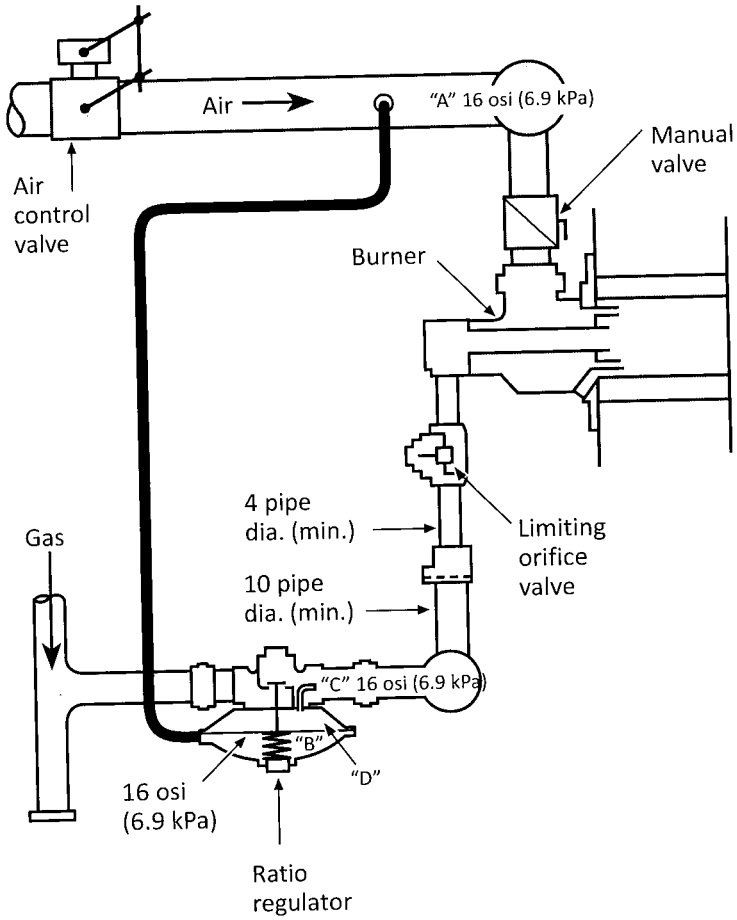

## Power burners

The industry generally uses the term ***power burner*** to refer to any gas burner equipped with a blower located upstream of the combustion chamber. As such, the term is interchangeable with the terms ***forced draft burner***.

Although it uses a blower to deliver all the combustion air to the combustion chamber, a power burner (like a forced-draft burner) does not necessarily force flue gases through the vent. It may deliver the flue gases to the appliance outlet at zero pressure and depend on a natural draft or fan-assist venting system to remove the flue gases to the outdoors. See Figure 2-14.

**Figure 2-14**
**Power burner (or forced draft burner) with an induced draft venting system**

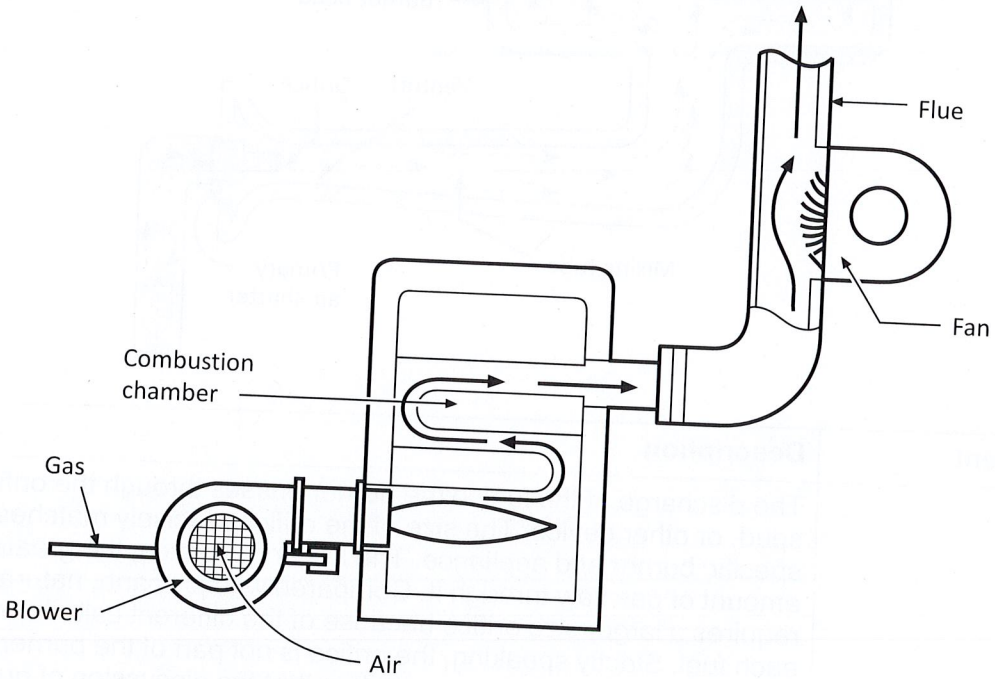


## Atmospheric burners

An atmospheric burner is the most common type of burner you can find in residential and commercial equipment. It is a simple device that requires no fans or electrical supply. Its function is to burn gaseous fuels efficiently and simply, while operating under normal atmospheric pressure with low gas pressures.

Atmospheric burners are a type of premix burner. However, their principle of operation only allows for the premixing of approximately 50% of the air needed for combustion. You must supply the remaining air required for complete combustion as secondary air after the point of ignition and around the flame. As such, the industry often calls them ***partial premix burners***.

The *Burner classifications* section discusses full premix burners.

# Components

Gas burners have many different shapes, sizes, and styles, but they all have the same components. Since you may need to adjust and service the burners after installing each appliance, you should know each component and how it operates. Refer to Figure 2-15 when reading about the components.

**Figure 2-15**
**Components of an atmospheric burner**

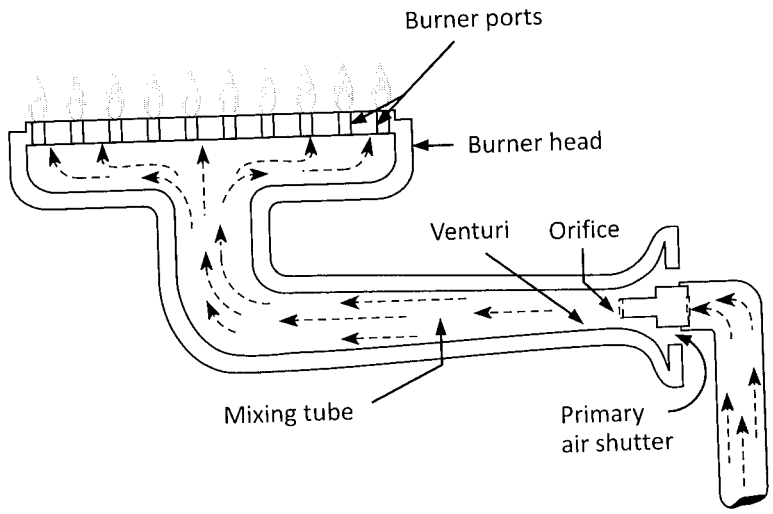


| Component | Description |
|---|---|
| Orifice | The discharge of the fuel to the burner passes through the orifice cap, spud, or other device. The size of the orifice precisely matches the specific burner and appliance. The larger the orifice, the greater the amount of gas flow through it. Compared with propane, natural gas requires a larger size orifice because of the different calorific values for each fuel. Strictly speaking, the orifice is not part of the burner, but it is such a vital part of the burner system that the discussion of burners includes it. |
| Primary air shutters | The air shutter adjusts the size of the primary air inlet(s). Some burners have a fixed primary air inlet and are designed for a particular gas at a specific gas pressure. Most burners, however, have an adjustable air shutter to adjust the primary air flow. |
| Venturi | The venturi is a short tube with a constricted, throat-like passage. This passage increases the velocity and lowers the pressure of a gas passing through it. Many atmospheric burners are necked down to a venturi throat. See Figure 2-16. |
| Mixing tube | The mixing tube is the portion of the mixer that lies between the venturi and the burner head. The gas and primary air mix together as they move along this tube. |

| Component | Description |
|---|---|
| Burner head | The burner head uniformly distributes the air/gas mixture to the burner ports. You can tailor its size and shape to fit an appliance combustion chamber and provide even heat release to heat transfer surfaces. |
| Burner ports | The burner port is an orifice, or opening, that does three things. It:<br>• discharges the air/gas mixture for ignition;<br>• distributes flames to provide an even heat transfer to the heat exchanger; and<br>• spreads the flames so they can be reached by secondary air. |

**Figure 2-16**
**Venturi design premixes air and gas**

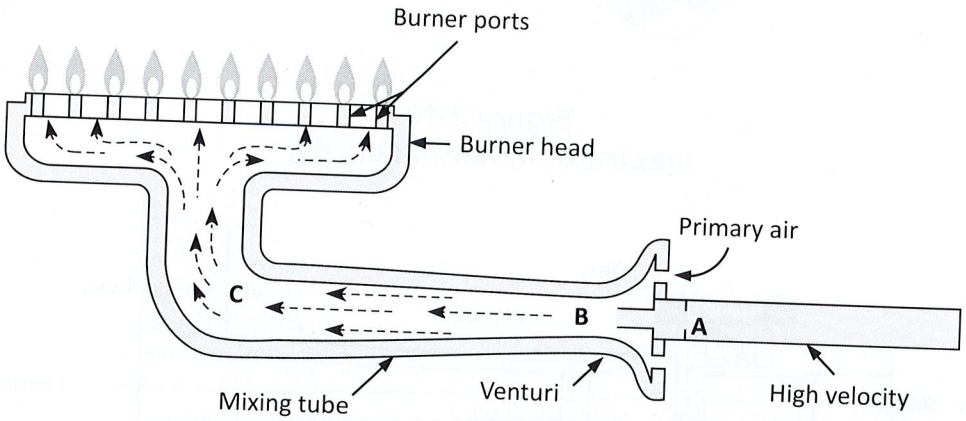


## Single port (monoport) burners

The single port burner is an extremely simple design and is fairly inexpensive. To make a single port burner, simply extend the mixer tube and expect gas to burn on the end of the tube. In other words, there is no burner head.

This design produces a single large flame. To eliminate yellow tipping when burning natural gas, single port burners need about 50% (or more) primary air.

Single port burners usually are more susceptible to flashback and are noisier than most other types of burners. The flames on large single port burners also tend to lift. Oftentimes, you need to insert a flame retention device—a crimped ring— just inside the lip of the burner port to minimize lifting.

The most common types of single port burners are the inshot and upshot burners.

## Inshot burners

An inshot burner (see Figures 2-17and 2-18) usually fires horizontally. Gas burns on the end of the straight extension of the mixer tube. A flame spreader is sometimes mounted in front of the burner port to spread the flame (not shown).

**Figure 2-17**
**Inshot monoport burner**

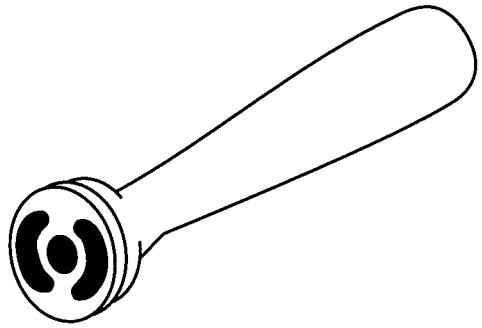

**Figure 2-18**
**Inspirator industrial burner**

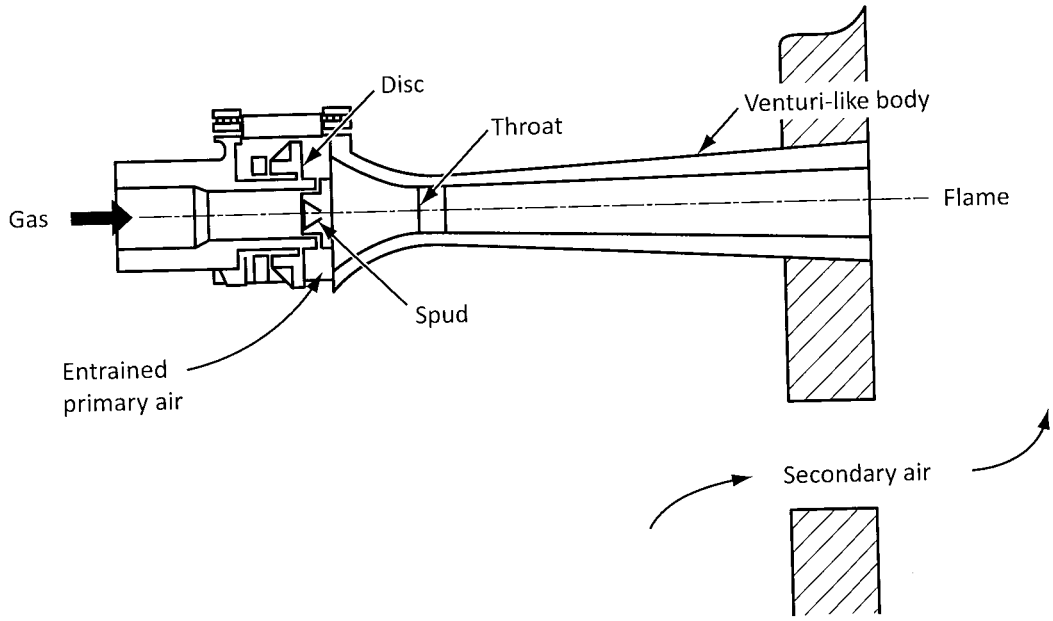


## Upshot burner

In an upshot burner, air/gas mixture flows through a bend and into a riser tube where it burns vertically (see Figure 2-19). Again, a flame spreader is sometimes mounted above the port to spread the flame.

**Figure 2-19**
**Upshot monoport burner**

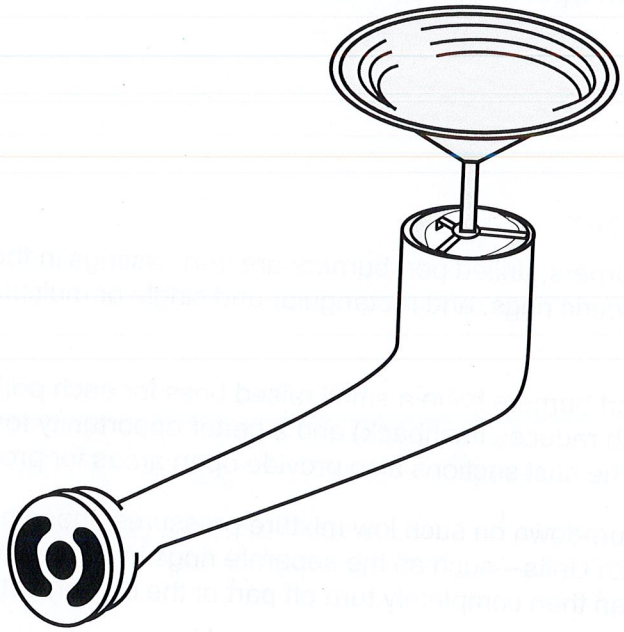

## Multiport burners

The multiport burner is the most common atmospheric burner in appliances. The basic components are the same as a monoport upshot burner with the addition of a multiport burner head. See Figure 2-20.

**Figure 2-20**
**Upshot multiport burner**

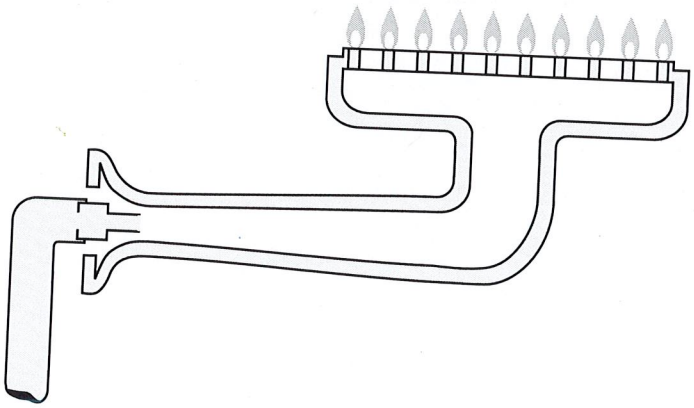

The multiple burner ports serve several purposes:

- They distribute flames to provide good heat transfer to the heat exchanger.
- They spread the flames so they can be reached by secondary air.
- They provide stable blue flames.

- Multiport burners are susceptible to clogging from the inside with lint.

Some of the more common types of multiport burners are the:

- drilled port;
- drilled pipe;
- slotted port; and
- ribbon port.

## Drilled port burner

Classified as multiport burners, drilled port burners are iron castings in the form of stars, wheels, segments of rings, concentric rings, and rectangular and single or multiple bars (see Figure 2-21).

Some cast iron drilled port burners have a small raised boss for each port. These bosses give a greater port length (which reduces flashback) and a better opportunity for secondary air to surround the flame jet. The cast sections also provide open areas for proper air distribution.

To overcome the small turndown on such low mixture pressures, these burners in large capacity are frequently divided into Units—such as the separate rings in concentric ring burners—with individual mixers. You can then completely turn off part of the burner, yet still maintain the turndown.

Since smaller drill sizes distribute flames more evenly, ports should be no larger than a No. 29 drill. To avoid plugging, they should be no smaller than a No. 42.

### Uses

These burners spread the heat at a low intensity over a relatively large area for relatively low temperature operations such as heating small solution tanks, cooking kettles, candy furnaces, stove top ovens, and broiler burners.

**Figure 2-21**
**Types of drilled port burners**
**Image courtesy of BC Gas.**

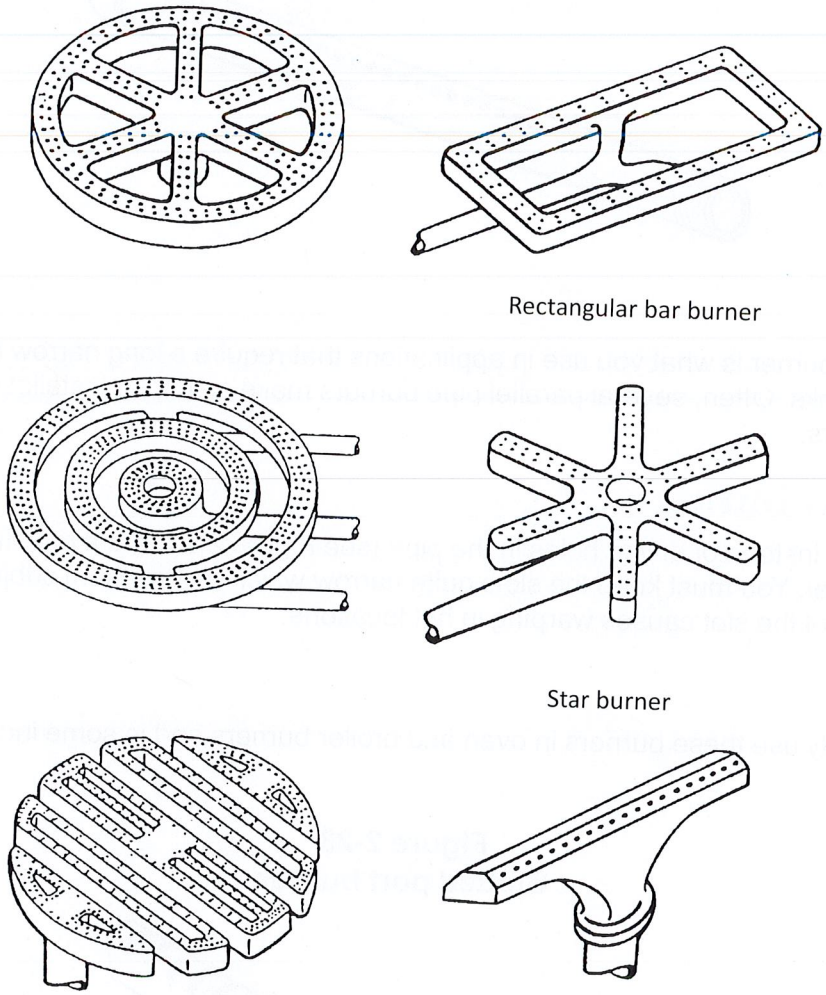


## Drilled pipe burner

Manufacturers make drilled pipe burners (see Figure 2-22) from standard pipe with either one row of holes on top, or two rows at 30° each side of vertical. The critical measurements are:

- port size;
- total port area;
- ratio of port area to cross-section;
- total length; and
- distance from mixer to first port.

**Figure 2-22**
**Drilled pipe burner**

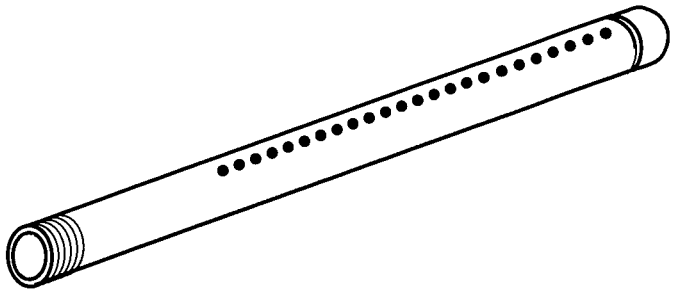

## Uses

The drilled pipe burner is what you use in applications that require a long narrow heat band, as in large solution tanks. Often, several parallel pipe burners make a simpler installation than several cast head burners.

## Slotted port burner

The sawed slots instead of drilled holes in the pipe (see Figure 2-23) are a modification of the drilled pipe burner. You must keep the slots quite narrow which makes them subject to clogging. Also, the length of the slot causes warping in hot locations.

## Uses

People frequently use these burners in oven and broiler burners and in some industrial applications.

**Figure 2-23**
**Slotted port burner**

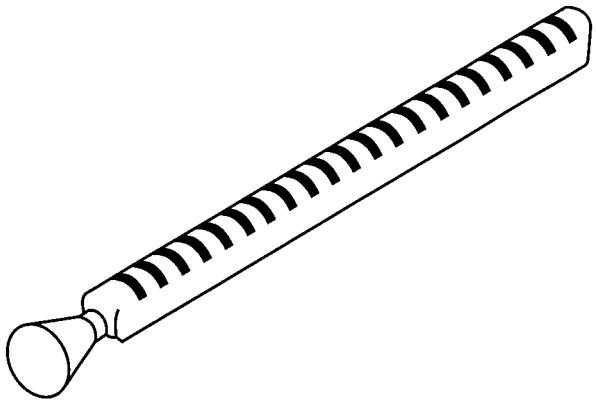

## Ribbon port burner

Similar to the drilled pipe burner, the ribbon port burner is often made from standard pipe. However, instead of drilled holes, the combustion ports are lengthwise slots that have an assembly of crimped and straight metal strips pressed into them. See Figure 2-24.

**Figure 2-24**
**Ribbon burner**
**Image courtesy of BC Gas.**

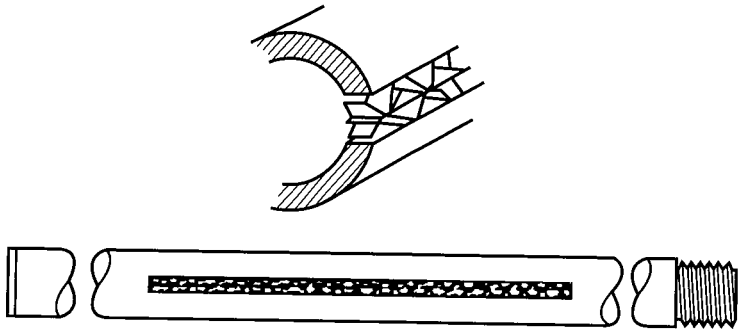

The spaces that the crimped metal creates provide the individual ports. This results in a continuous flame, instead of individual jets. Because of the solid flame, the slot width must be narrow enough to allow secondary air to reach the centre of the flame. As a rule, the continuous flame is generally shorter for the same Btu release of heat in the ribbon port burner than the drilled pipe burner.

### Uses

Large bakery ovens, solder pots on can machinery, and textile singeing and shrinking machines (tentering frames) widely employ ribbon burners.

## Radiant head atmospheric burners

You can employ the basic atmospheric burner design to supply a partial premixture of air and gas to a catalytic burner head that creates a radiant heat surface. The catalytic burner head may be ceramic (see Figure 2-25) or a porous matrix on or in which a catalytic agent such as platinum (see Figure 2-26) is distributed.

**Figure 2-25**
**Ceramic radiant burner head on atmospheric burners**

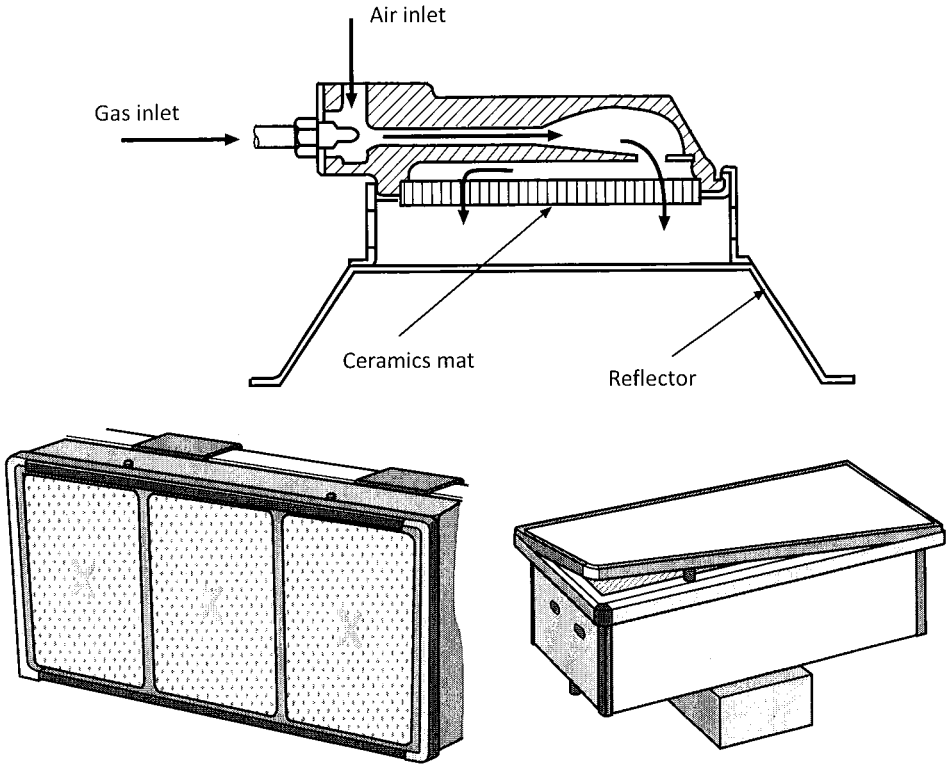


**Figure 2-26**
**Wire matrix radiant burner head**

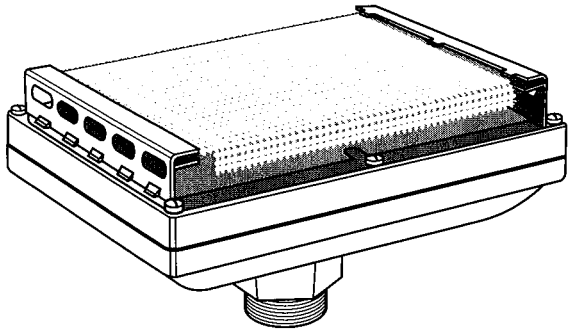

# Pulse combustion atmospheric burner

A pulse combustion burner (see Figure 2-27) is a unique type of atmospheric burner that enables burning of the fuel air mixture in separate pulses (rather than continuously as in a standard gas burner). Since the supply of air does not require the use of a mechanical device, the pulse burner falls within the atmospheric burner category. Note that the use of a blower is for pre- purge and post-purge only.

**Figure 2-27**
**Pulse combustion process**
**Image courtesy of Lennox Industries Inc.**

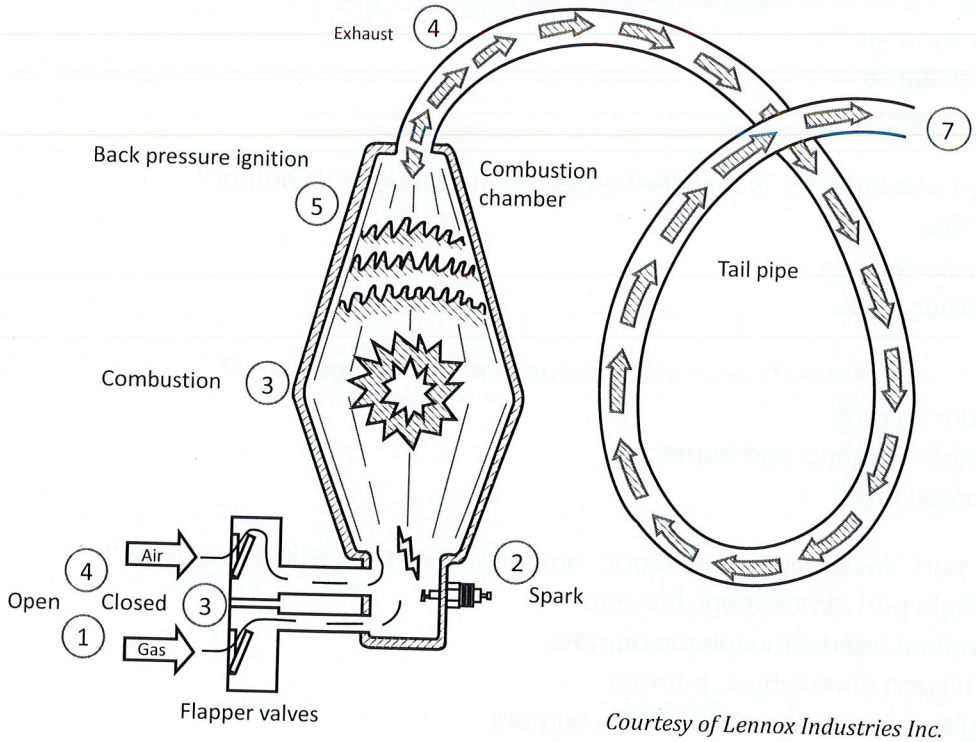


*Courtesy of Lennox Industries Inc.*

A pulse combustion atmospheric burner operates as follows:

1) Gas and air enter and mix in combustion chamber.
2) To start the cycle, the burner uses a spark to ignite the gas and air mixture. (This is one "pulse".)
3) Positive pressure from combustion closes flapper valves and forces exhaust gases down a tail pipe.
4) Exhaust gases leaving the chamber create a negative pressure. This opens the flapper valve drawing in gas and air.
5) At the same instant, part of the pulse is reflected back from the tail pipe causing the new gas and air mixture to ignite. No spark is needed. (This is another "pulse".)
6) Steps 4 and 5 repeats 60 to 70 times per second forming consecutive "pulses" of 1/4 to 1/2 Btu/h each.
7) The process removes latent heat is removed from combustion products, and condensate (water) forms in the condensate coil.

# Assignment Questions – Chapter 2

1) What term is used to describe a burner flame that moves back through the burner nozzle?
   a) Delayed ignition
   b) Lazy flame
   c) Flashback

2) Through which device is fuel discharged to an atmospheric burner?
   a) Orifice
   b) Burner venturi
   c) Burner ports

3) Which type of atmospheric burner produces a single large flame?
   a) Induced draft
   b) Single or mono-port burner
   c) Forced draft

4) Drilled port, drilled pipe, slotted port, and ribbon port are all types of what?
   a) Single port atmospheric burners
   b) Radiant head atmospheric burners
   c) Multiport atmospheric burners
   d) Pulse combustion atmospheric burners

5) What is the recommended maximum port diameter for drilled port atmospheric burners?
   a) No. 29 drill
   b) No. 12 drill
   c) No. 42 drill
   d) No. 56 drill

6) What is the recommended minimum port diameter for drilled port atmospheric burners?
   a) No. 56 drill
   b) No. 12drill
   c) No. 42 drill
   d) No. 29 drill

7) What type of burner has combustion air supplied by a fan or blower under sufficient pressure to overcome the restriction of the burner and the appliance?
   a) Fan assisted burner
   b) Natural draft burner
   c) Forced draft burner