Diagnosis Functional Description

ABS/ESP-System

Draft

Protocol: ***UDS*** (ISO 14229-1)
Communication Bus: ***CAN***

© This document is the exclusive property of Robert Bosch GmbH. Without their consent it may not be reproduced or given to third parties.
If printed this is a uncontrolled document. The user must verify it is an authorized edition prior to use.

History

Corrections of misspelling are excluded from the following list:

Ver.	Date	Editor	Chapter	Description of changes
01	2010-07-29	L.Franzitta	New edition	--
02	2011-02-09	L.Franzitta	all	Overall update
03	2011-02-11	L.Franzitta	3.3.5	Updated DIDs to make them UDS conform
04	2011-03-03	L.Franzitta	3.1.5 3.3.9 3.3.8 3.3.5	CAN identifier for response and receive messages Removed routine for activation of EVP Included Service IOCBI for EVP activation Updated DIDs to include EVP data

To be taken into consideration

Following issues should be clarified between customer and Bosch during the initial phase of a project:

- definition of the CAN identifiers for diagnosis (see chapter 3.1.5)
- definition of the CAN timing parameters (see chapter 3.1.6)
- definition of the speed limit (see chapter 3.2.4)

The parameters relevant for clarification (chapter 3.1.6 timings, chapter 3.1.5 CAN-IDs) are filled with dummy values marked as: ***red marked text***

© This document is the exclusive property of Robert Bosch GmbH. Without their consent it may not be reproduced or given to third parties.
If printed this is a uncontrolled document. The user must verify it is an authorized edition prior to use.

Table of Contents

1. SHORT DESCRIPTION OF DIAGNOSTIC COMMUNICATION 4

2. CONTEXT INFORMATION 5

2.1. OPERATIONAL ENVIRONMENT 5
2.2. USE CASES 5
2.3. REFERENCED DOCUMENTS 6
2.3.1. International Documents 6

3. REQUIREMENTS 7

3.1. TRANSPORT PROTOCOL: CAN 7
3.1.1. Data Stream 7
3.1.2. Message Types 8
3.1.3. Addressing Types 10
3.1.4. CAN Communication Failures 11
3.1.5. CAN Identifier 11
3.1.6. CAN Timing Parameters 11
3.2. COMMUNICATION MANAGER 13
3.2.1. Session Handling 13
3.2.2. Concurrent Tester Present ("Keep Alive" Logic) 13
3.2.3. Suppress Positive Response Bit 13
3.2.4. Speed Limit 13
3.3. APPLICATION: DIAGNOSTIC SERVICES 15
3.3.1. Service $10 - DiagnosticSessionControl 15
3.3.2. Service $11 - ECUReset 17
3.3.3. Service $14 - ClearDiagnosticInformation 18
3.3.4. Service $19 - ReadDTCInformation 19
3.3.5. Service $22 - ReadDataByIdentifier 26
3.3.6. Service $28 – Communication Control 32
3.3.7. Service $2E – WriteDataByIdentifier 33
3.3.8. Service $2F – Input Output Control By Identifier 34
3.3.9. Service $31 – RoutineControl 36
3.3.10. Service $3E - TesterPresent 45
3.3.11. Service $7F - Negative Response 46
3.3.12. Service $85 - ControlDTCSetting 47
3.4. APPLICATION: END-OF-LINE ROUTINES 48
3.4.1. Actuator Table 48
3.4.2. Actuation Limitations 48
3.5. APPLICATION: FAULT MEMORY 49
3.5.1. Diagnostic Trouble Codes 49

© This document is the exclusive property of Robert Bosch GmbH. Without their consent it may not be reproduced or given to third parties.
If printed this is a uncontrolled document. The user must verify it is an authorized edition prior to use.

1. Short Description of Diagnostic Communication

Diagnostic communication provides the capability of quickly accessing information and functions of the control unit via external tester tools. Diagnostic communication provides services to:

- Identify the ECU
- Read input signals of the ECU
- Read input signals
- Write output signals to the actuators
- Read ECU-internal information (e.g. contents of the fault memory)

Diagnostic communication can be used for end-of-line testing or in the servicing workshop. The testing time can be reduced substantially by using the services provided by diagnosis.

This document describes the diagnostic communication functions and specifications of the diagnostic Session. The Flash Reprogramming Session is described in a separate document.

© This document is the exclusive property of Robert Bosch GmbH. Without their consent it may not be reproduced or given to third parties.
If printed this is a uncontrolled document. The user must verify it is an authorized edition prior to use.

2. Context Information

2.1. Operational Environment

Within a vehicle, normally several ECUs exist. The ECUs share a common diagnostic bus: several ECUs are connected to this bus and an additional connector allows an external tester tool to be connected to the vehicle. This connector is known as the OBD (On Board Diagnosis) connector:

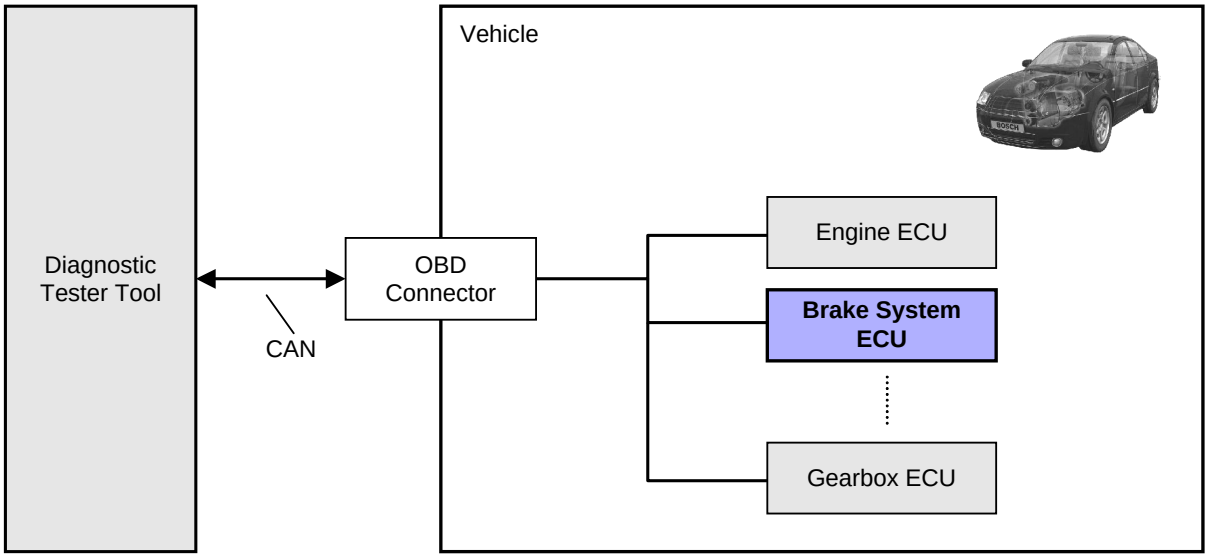

2.2. Use Cases

The Diagnostic Tester Tool can be a production facility in the vehicle production plant or a tool that is used in the repair shop. These tester tools send diagnostic requests to the ECUs in the vehicle and evaluate the responses. As the brake system ECU is also part of the vehicle, all Bosch brake system ECU's support a diagnosis communication interface to transfer information from an ECU to an off-board tester and vice-versa.

The information transferred consists of ECU fault information, signal reporting, control routines, calibration values and many other types of data used either in performing ECU diagnostics, re-programming or any other data transfer not associated with normal node to node communication.

The diagnostic communication (DCOM) part of the software is described in the following sub-chapters: its main task is to maintain correct communication between tester tools and the brake system ECU.

© This document is the exclusive property of Robert Bosch GmbH. Without their consent it may not be reproduced or given to third parties.
If printed this is a uncontrolled document. The user must verify it is an authorized edition prior to use.

2.3. Referenced Documents

2.3.1. International Documents

The general requirements of the diagnosis communication protocol are based on ISO requirements, specified in the following documents:

- ISO 14229-1: Road Vehicles - Unified Diagnostic Services (UDS)
- ISO 15765-2: Road Vehicles - Diagnostics on CAN: Network Layer Services

© This document is the exclusive property of Robert Bosch GmbH. Without their consent it may not be reproduced or given to third parties.
If printed this is a uncontrolled document. The user must verify it is an authorized edition prior to use.

3. Requirements

3.1. Transport Protocol: CAN

3.1.1. Data Stream

The ECU supports CAN diagnostic messages using the Unacknowledged Segmented Data Transfer (USDT) mechanism as specified in ISO 15765-2. Accordingly the following two types of CAN data streams are supported:

3.1.1.1. Non-Segmented Data Stream

A non-segmented data stream consists of a Single Frame (SF). Non-segmented data stream are used for messages with a maximum data length of 7 data bytes in case of normal addressing.

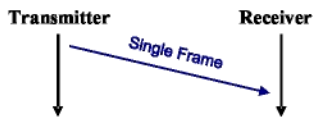

3.1.1.2. Segmented Data Stream

A segmented data stream consists of multiple frames of segmented CAN messages. A segmented data stream must be used if the maximum data length exceeds 7 data bytes in case of normal addressing.

The data stream comprises a First Frame (FF) and a number of Consecutive Frames (CF) containing the subsequent data bytes, following the First Frame. The receiver has to send a Flow Control (FC) after reception of the First Frame.

The Flow Control contains information regarding Block Size and the Separation Time. The Block Size (BS) is the maximum number of Consecutive Frames the receiver allows the sender to send, before waiting for an authorisation (Additional Flow Control Frames) from the receiver to continue transmission. The Separation Time (Stmin) is the (minimum) time the sender has to wait between transmissions of two consecutive frames.

© This document is the exclusive property of Robert Bosch GmbH. Without their consent it may not be reproduced or given to third parties.
If printed this is a uncontrolled document. The user must verify it is an authorized edition prior to use.

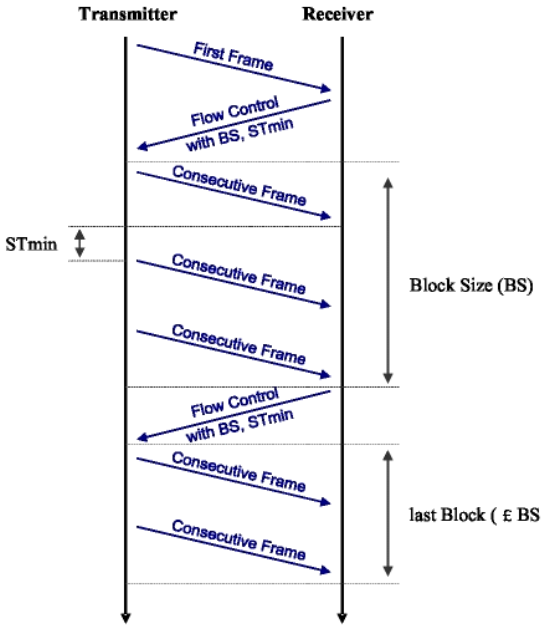

.

3.1.2. Message Types

Each Single Frame (SF), First Frame (FF), Consecutive Frame (CF) or Flow Control (FC) has an 8-byte Data Field (DLC of CAN message is set to 8) consisting of the following parts:
•Protocol Control Information (PCI)
indicates the frame type, number of frames, data length etc
•Transmission data (Data)
contains data to be sent

Data Field Structure					
Frame Type	**Byte 1**		**Byte 2**	**Byte 3**	**Byte 4 – 8**
	Bit 7- 4	**Bit 3 – 0**			
Single Frame (SF)	Type_SF = 0000B	SF_DL	DB 1	DB 2	DB 3 – 7
First Frame (FF)	Type_FF = 0001B	FF_DL		DB 1	DB 2 – 6
Consecutive Frame (CF)	Type_CF = 0010B	SN	DB x_1	DB x_2	DB x_3-x_7
Flow Control (FC)	Type_FC = 0011B	FS	BS	Stmin	N/A

SF_DL: 4 Bit Single Frame Data length
FF_DL: 12 Bit First Frame Data length
SN: Sequence Number
FS: Status of data stream
BS: Block Size
Stmin: Minimum Separation Time
DB: Data Byte

3.1.2.1. Single Frame

© This document is the exclusive property of Robert Bosch GmbH. Without their consent it may not be reproduced or given to third parties.
If printed this is a uncontrolled document. The user must verify it is an authorized edition prior to use.

A Single Frame message type is used for data messages with a maximum data length of 7 data bytes. The PCI Type 0000B identifies a Single Frame. The Single Frame data length SF_DL is defined as:

Single Frame Data Length (SF_DL):

Hex Value	Description
0h – 7h	Single Frame Data length (SF_DL) contains number of data Bytes

3.1.2.2. First Frame

Messages longer than 7 data bytes are segmented into a First Frame and one or more Consecutive Frames. The PCI Type 0001B identifies a First Frame. The First Frame data length FF_DL is defined as:

First Frame Data Length (FF_DL):

Hex Value	Description of FF_DL
000h – 007h	Reserved
008h – FFFh	First Frame Data length (FF_DL) contains number of data bytes. 12 Bit FF_DL theoretically supports sending of up to 4096 data bytes. Note: The ECU supports segmented data messages up to maximally 50 data bytes.

3.1.2.3. Consecutive Frame

Consecutive Frames are following a First Frame. The PCI Type 0010B identifies a Consecutive Frame. The Sequence Number (SN) in the lower nibble of a Consecutive Frame is specified as follows:

- The first Consecutive Frame always starts with Sequence Number 1.
- The Sequence Number is incremented by one for each additional Consecutive Frame.
- The Sequence Number (SN) value is not affected by any Flow Control (FC) frame.
- When the Sequence Number reaches the value of 15, the next Consecutive Frame will be sent with a Sequence Number set to 0.

Definition of Sequence Number (SN):

Protocol Data name	FF	CF	CF	CF	CF	CF	CF	CF	CF
SN (hex)	--	1	2	...	E	F	0	1	...

Hex Value	Description
0h – Fh	Sequence Number (SN) The Sequence Number has a range of 0 to 15. The Sequence Number is stored in the lower 4 bits of Byte 1.

© This document is the exclusive property of Robert Bosch GmbH. Without their consent it may not be reproduced or given to third parties.
If printed this is a uncontrolled document. The user must verify it is an authorized edition prior to use.

3.1.2.4. Flow Control

After the First Frame or the last Consecutive Frame of a block of frames (when further Consecutive Frames are required to complete the data transfer) the receiver must send a Flow Control (FC) frame. The PCI Type 0011B identifies a Flow Control Frame.

The flow control mechanism allows the receiver to inform the sender about the receiver's capabilities. The Flow Control contains information regarding Block Size and the Separation Time. The Block Size (BS) is the maximum number of Consecutive Frames the receiver allows the sender to send, before waiting for an authorisation (Additional Flow Control Frames) from the receiver to continue transmission. The Separation Time (Stmin) is the (minimum) time the sender has to wait between the transmissions of two consecutive frames.

Flow Status (FS):

Hex Value	Description
0h	Continue To Send (CTS) The Receiver is ready and is waiting for maximally BS Consecutive Frames

Block Size (Bsmax):

Hex Value	Description
00h	Block Size (BS) Indicates that no more Flow Control (FC) frames are allowed during transmission of the segmented data frame. All Consecutive Frames (CF) will be send without any stop for further Flow Control frames.
01h – FFh	Block Size (BS) Defines the maximal amount of Consecutive Frames (CF) that can be received without an intermediate Flow Control (FC) frame.

Separation Time (Stmin):

Hex Value	Description
00h – FFh	Separation Time (Stmin) The Separation Time defines the minimum allowed time gap (in ms) between the transmission of Consecutive Frames (CF).

3.1.3. Addressing Types

3.1.3.1. Physical Address Type

Physical addressing is used for a point-to-point communication between the diagnostic tool and the ECU (1:1 communication).

The diagnostic tool is sending a physically addressed request messages with CAN identifier CANID_REQ_PHYS to the ECU and the ECU will generally send a response message with CAN Identifier CANID_RES_PHYS

Requirements

© This document is the exclusive property of Robert Bosch GmbH. Without their consent it may not be reproduced or given to third parties.
If printed this is a uncontrolled document. The user must verify it is an authorized edition prior to use.

•Physical addressing (1 to 1 communication) is supported for all types of network layer messages.

3.1.3.2. Functional Address Type

Functional addressing is used for broadcast communication between the diagnostic tool and all connected ECUs (1:n communication).

The diagnostic tool is sending a functionally addressed request messages with CAN identifier CANID_REQ_FUNC to all ECU's and each ECU is sending a response message with the CAN Identifier CANID_RES_PHYS

Requirements

•Functional addressing (1 to n communication) is only supported for Single Frame communication. The ECU is ignoring all other functional addressed frames (e.g. a First Frame).

3.1.4. CAN Communication Failures

3.1.4.1. Unexpected Messages

As a general rule, the arrival of an unexpected message or a message with illegal format from any node will be ignored.

3.1.4.2. Missing Messages

If the ECU is detecting a communication failure (e.g. timing violations of the Network Layer) during a diagnostic tool request, the ECU discards the request and no response will be sent.

3.1.5. CAN Identifier

Description	Name	CAN–ID
CAN Identifier for physical addressed request messages	CANID_REQ_PHYS	***645***
CAN Identifier for response messages	CANID_RES_PHYS	***655***
CAN Identifier for functional addressed request messages	CANID_REQ_FUNC	***7DF***

3.1.6. CAN Timing Parameters

Requirements:

•ECU timings have an accuracy error < +/- 2 ms

© This document is the exclusive property of Robert Bosch GmbH. Without their consent it may not be reproduced or given to third parties.
If printed this is a uncontrolled document. The user must verify it is an authorized edition prior to use.

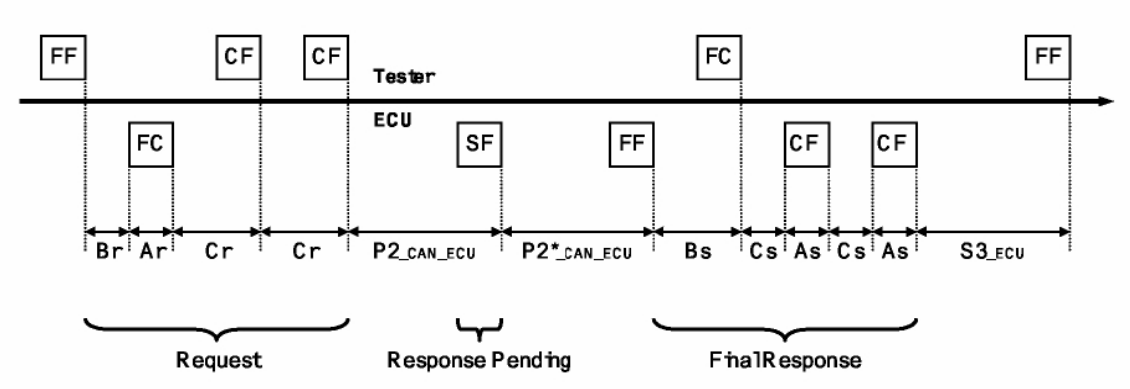

3.1.6.1. Performance Parameters

Parameter	Description	Min Value	Max Value
P2_CAN_ECU	Performance requirement for the ECU to start with the response message after the reception of a request message	***N/A***	***50***
P2*_CAN_ECU	Performance requirement for the ECU to start with a further response message after transmission of a negative response message with negative response code 78h (Response Pending)	***N/A***	***4000***
Br	Performance requirement for the ECU to transmit a required Flow Control Frame after reception of a First Frame or Consecutive Frame from Tester	***N/A***	***10***
Cs	Performance requirement for the ECU to transmit a First Consecutive Frame after reception of a Flow Control. Performance requirement for the ECU to transmit a Next Consecutive Frame after Sending of a Consecutive Frame	***N/A***	***10***
P3_CAN_ECU	Minimal Time between response from the ECU and the next request from the tester	5 ms	N/A
Stmin,r	Stmin,r is the timing parameter in the FC sent by a tester to control the transmission rate of CF frames sent by the ECU	0 ms	127 ms
Stmin,s	Stmin,s is the timing parameter in the FC sent by a ECU to control the transmission rate of CF frames sent by the tester	***N/A***	***10***

3.1.6.2. Timeout Parameters

Parameter	Description	Min Value	Max Value
As/Ar	Timeout for a ECU to access a network and to transmit a diagnostic CAN frame	N/A	***1000***
Bs	Timeout for a ECU to wait for a Flow Control from the tester after sending a First Frame (or a Next Consecutive Frame)	N/A	***1000***
Cr	Timeout for a ECU to wait for a Consecutive Frame after Sending a Flow Control Frame or Receiving a Consecutive Frame	N/A	***1000***
S3_ECU	Timeout for a ECU wait for any diagnostic request message to keep a diagnostic session other than Default Session active.	N/A	5000 ms

© This document is the exclusive property of Robert Bosch GmbH. Without their consent it may not be reproduced or given to third parties.
If printed this is a uncontrolled document. The user must verify it is an authorized edition prior to use.

3.2. Communication Manager

3.2.1. Session Handling

Any diagnostic session will be active as long as the ECU is powered.

Timeout Monitoring (S3max):
If the ECU is not in the Default Session and not receiving any request from the diagnostic tool for P3_ECU_CAN the ECU will start the Default Session.

3.2.2. Concurrent Tester Present ("Keep Alive" Logic)

There is only one diagnostic protocol instance available in the ECU, which can handle only one request at a time. The rule is that any received message (regardless of addressing mode physical or functional) occupies this resource until the request message is processed (with final response sent or application call without response).

There is one exception from this rule: The Keep-Alive-Logic in the ECU. A functionally addressed valid Tester Present message with SPRMIB (Suppress Positive Response Message Indication Bit) = 01h can be processed in parallel.

3.2.3. Suppress Positive Response Bit

The Suppress Positive Response Bit is only supported for services which are explicitly specified to be addressed functionally. The Suppress Positive Response bit is then considered for both address types.

The Suppress Positive Response Bit is not supported for services which are not explicitly specified to be addressed functionally. A service with SPRMIB (Suppress Positive Response Message Indication Bit) = 01h is answered with a negative response message with negative response code “sub function not supported”.

Behaviour for Physical Addressing:
- The positive response may be suppressed if the optional Suppress Positive Response Message Indication Bit is set.
- The ECU is always sending a negative response.

Behaviour for Functional Addressing:
- The positive response may be suppressed if the optional Suppress Positive Response Message Indication Bit is set.
- The ECU is always sending a negative response, except for the negative response codes SNS (Service Not Supported), SFNS (Sub Function Not Supported) or ROOR (Request Out Of Range) if the message is addressed functionally.

3.2.4. Speed Limit

If the extendedDiagnosticSession is active, a speed limit monitoring is active.

The speed limit value is defined to ***10*** km/h. As soon as this vehicle speed is exceeded, the extendedDiagnosticSession is automatically deactivated.

© This document is the exclusive property of Robert Bosch GmbH. Without their consent it may not be reproduced or given to third parties.
If printed this is a uncontrolled document. The user must verify it is an authorized edition prior to use.

Speed limit monitoring can be deactivated by an actuator number (refer to service ID $31).

Activation of the extendedDiagnosticSession is not allowed if the speed limit is already exceeded if service $10 is received.

© This document is the exclusive property of Robert Bosch GmbH. Without their consent it may not be reproduced or given to third parties.
If printed this is a uncontrolled document. The user must verify it is an authorized edition prior to use.

3.3. Application: Diagnostic Services

3.3.1. Service $10 - DiagnosticSessionControl

3.3.1.1. Description

The DiagnosticSessionControl service is used to enable different diagnostic sessions in the ECU.

State Transitions

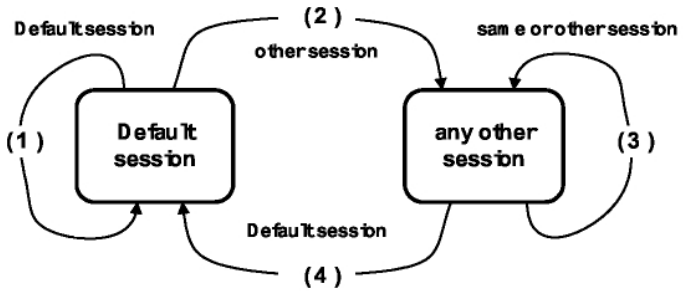

•If a diagnostic session, which is already active is requested by the diagnostic tool, then the ECU is sending a positive response message and performs all initialisation in the same way as if it changed from a different session.

•Start defaultSession:
The ECU is initializing the default session. The ECU is resetting all activated settings & controls. This session is active after power on or after an explicit change to defaultSession.

Start any other session:
The ECU is (re-) initializing the requested session. The states of Communication Control and Control DTC Setting services are not affected.

3.3.1.2. Availability

Supported Diagnostic Sessions	X	defaultSession
	X	extendedDiagnosticSession
Supported Addressing Modes	X	physical
	X	functional

© This document is the exclusive property of Robert Bosch GmbH. Without their consent it may not be reproduced or given to third parties.
If printed this is a uncontrolled document. The user must verify it is an authorized edition prior to use.

3.3.1.3. Request Message

Byte	Bit	Description	Value + Unit	LSB	Offset
1		Request Service Id = [Diagnostic Session Control]	$10		
2	0..6	Sub Function Diagnostic Session Type	$xx		
	7	Suppress Positive Response Bit	0 = ECU is sending a positive response 1 = ECU is not sending a positive response		

Diagnostic Session Type
Select the desired diagnostic session. Refer to the subsections below for additional details.

Value	Description
$01	defaultSession
$02	Reprogramming Session
$03	extendedDiagnosticSession

3.3.1.4. Response Message

Byte	Bit	Description	Value + Unit	LSB	Offset
1		Response Service Id = [Diagnostic Session Control]	$50		
2		Diagnostic Session Type	$xx		
3..4		P2_CAN_ECU_max	0 .. 65535 ms	1	0
5..6		P2*_CAN_ECU_max	0 .. 655350 ms	10	0

3.3.1.5. Negative Response Codes

Value	Description
$12	Sub Function Not Supported
$13	Incorrect Message Length
$22	Conditions Not Correct
$78	Request Correctly Received – Response Pending

3.3.1.6. Subfunction $01 - defaultSession

The ECU starts in the defaultSession when powered up.
The defaultSession has no influence on controller functionality.

3.3.1.7. Subfunction $02 – Reprogramming Session

The ECU will always send a Negative Response with response code Response Pending (78h) to start the Reprogramming Session in order to fulfil P2_CAN_ECU CAN timing specifications. According to UDS in this case also a Final Positive Response Message has to be send. (The Suppress Positive Response Bit will not be considered).
The ECU Flash Reprogramming Session is safety protected and will only be started if the following requirements are met:

© This document is the exclusive property of Robert Bosch GmbH. Without their consent it may not be reproduced or given to third parties.
If printed this is a uncontrolled document. The user must verify it is an authorized edition prior to use.

No controller intervention (ABS, ASR, FZR, HOLD).
At least 3 Wheel Speeds < 10 km/h

Note:
- CAN Communication is only available for the Diagnostic Flash Reprogramming protocol.
- This document does not refer to services which only available in the Reprogramming Session.

3.3.1.8. Subfunction $03 - extendedDiagnosticSession

The extendedDiagnosticSession allows dedicated actuator activations and advanced troubleshooting routines.
As long as the extendedDiagnosticSession is running, no controller is active to prevent actuation conflicts.

Additionally, this session is protected by a speed limit of 10 km/h. The session cannot be activated if the speed limit is exceeded. Also, a currently active extendedDiagnosticSession is terminated when the speed limit is exceeded.

3.3.2. Service $11 - ECUReset

3.3.2.1. Description

This service requests the ECU to effectively perform a reset. The ECUReset positive response message (if required) is sent before the reset is executed in the ECU.

After a successful reset the ECU is starting the default diagnostic session.

3.3.2.2. Availability

Supported Diagnostic Sessions	X	defaultSession
	X	extendedDiagnosticSession
Supported Addressing Modes	X	physical
	X	functional

3.3.2.3. Request Message

Byte	Bit	Description	Value + Unit	LSB	Offset
1		Request Service Id = [Diagnostic Session Control]	$11		
2	0..6	Sub Function = [Reset Type]	$03 = softReset		
	7	Suppress Positive Response Bit	0 = ECU is sending a positive response 1 = ECU is not sending a positive response		

3.3.2.4. Response Message

Byte	Bit	Description	Value + Unit	LSB	Offset
1		Response Service Id = [ECU Reset]	$51		

© This document is the exclusive property of Robert Bosch GmbH. Without their consent it may not be reproduced or given to third parties.
If printed this is a uncontrolled document. The user must verify it is an authorized edition prior to use.

Byte	Bit	Description	Value + Unit	LSB	Offset
2		Sub Function = [Reset Type]	$03		

3.3.2.5. Negative Response Codes

Value	Description
$12	Sub Function Not Supported
$13	Incorrect Message Length

3.3.3. Service $14 - ClearDiagnosticInformation

3.3.3.1. Description

The service ClearDiagnosticInformation is used to clear the diagnostic information stored in the ECU's memory. The diagnostic information consists of
- DTC status bytes
- Captured snapshot data

ClearDiagnosticInformation resets any "drive-cycle" faults, that might require a dedicated good-check in subsequent ignition/power cycles.

3.3.3.2. Availability

Supported Diagnostic Sessions		defaultSession
	X	extendedDiagnosticSession
Supported Addressing Modes	X	physical
	X	functional

3.3.3.3. Request Message

Byte	Bit	Description	Value + Unit	LSB	Offset
1		Request Service Id = [ClearDTCInformation]	$14		
2..4		groupOfDTC[] = [groupOfDTCHighByte groupOfDTCMiddleByte groupOfDTCLowByte]	 $xx $xx $xx		

The only supported groupOfDTC is "All Groups (all DTCs)".

Byte	Bit	Description	Value + Unit	LSB	Offset
1		Request Service Id = [ClearDTCInformation]	$14		
2..4		groupOfDTC[] = [All Groups (all DTCs)]	$FF $FF $FF		

3.3.3.4. R

© This document is the exclusive property of Robert Bosch GmbH. Without their consent it may not be reproduced or given to third parties.
If printed this is a uncontrolled document. The user must verify it is an authorized edition prior to use.

esponse Message

Byte	Bit	Description	Value + Unit	LSB	Offset
1		Response Service Id = [ClearDiagnosticInformation]	$54		

3.3.3.5. Negative Response Codes

Value	Description
$13	Incorrect Message Length
$22	Conditions Not Correct
$31	Request Out Of Range
$78	Request Correctly Received – Response Pending
$7F	Service Not Supported In Active Session

3.3.4. Service $19 - ReadDTCInformation

3.3.4.1. Description

The service ReadDTCInformation allows a client to read DTC information from the ECU. The type of information which is read depends on the selected subfunction.
The EEPROM based fault memory of the ECU supports 6 failure entries. The Status of DTC parameter “Warning Indicator” is supported for confirmed DTCs only.

3.3.4.2. Availability

Supported Diagnostic Sessions	X	defaultSession
	X	extendedDiagnosticSession
Supported Addressing Modes	X	physical
		functional

3.3.4.3. Request Message

Byte	Bit	Description	Value + Unit	LSB	Offset
1		Request Service Id = [ReadDTCInformation]	$19		
2		Subfunction	$xx		
3..x		Additional Data	...		

Note: The additional data depends on the Subfunction. Request messages are described for each subfunction later on.

© This document is the exclusive property of Robert Bosch GmbH. Without their consent it may not be reproduced or given to third parties.
If printed this is a uncontrolled document. The user must verify it is an authorized edition prior to use.

3.3.4.4. Response Message

Byte	Bit	Description	Value + Unit	LSB	Offset
1		Response Service Id = [ReadDTCInformation]	$59		
2		Subfunction	$xx		
3..x		Additional Data	...		

Note: The additional data depends on the Subfunction. Request messages are described for each subfunction later on.

3.3.4.5. Negative Response Codes

Value	Description
$12	Sub Function Not Supported
$13	Incorrect Message Length
$22	Conditions Not Correct
$31	Request Out Of Range
$78	Request Correctly Received – Response Pending
$7F	Service Not Supported in Active Session

3.3.4.6. Subfunction $01 - reportNumberOfDTCByStatusMask

The Subfunction $01 - reportNumberOfDTCByStatusMask can be used to retrieve the number of diagnostic trouble codes matching a defined status mask to the diagnostic tool

Structure of the parameters statusOfDTC and DTCStatusMask:

Bit	Description
0	Test Failed (01h = Yes)
1	Reserved (0)
2	Reserved (0)
3	confirmedDTC (01h = Yes)
4	Test Not Complete Since Last Clear (01h = Yes)
5	Test Failed Since Last Clear (01h = Yes)
6	Reserved (0)
7	Warning Indicator requested (01h = Yes)

3.3.4.6.1. Request Message

Byte	Bit	Description	Value + Unit	LSB	Offset
1		Request Service Id = [ReadDTCInformation]	$19		
2		Subfunction reportDTCByStatusMask	$01		
3		DTCStatusMask	$xx		

© This document is the exclusive property of Robert Bosch GmbH. Without their consent it may not be reproduced or given to third parties.
If printed this is a uncontrolled document. The user must verify it is an authorized edition prior to use.

3.3.4.6.2. Response Message

Byte	Bit	Description	Value + Unit	LSB	Offset
1		Response Service Id = [ReadDTCInformation]	$59		
2		Subfunction reportDTCByStatusMask	$01		
3		DTCStatusMask	$B9		
4		DTC Format Identifier [00h] ISO15031-6 DTC Format	$00		
5 6		DTC Count Byte #1 DTC Count High Byte Byte #2 DTC Count Low Byte	$00-$FF $00-$FF		

3.3.4.7. Subfunction $02 - reportDTCByStatusMask

The Subfunction $02 - reportDTCByStatusMask can be used to retrieve a list of DTCs including their status.

Structure of the parameters statusOfDTC and DTCStatusMask:

Bit	Description
0	Test Failed (01h = Yes)
1	Reserved (0)
2	Reserved (0)
3	confirmedDTC (01h = Yes)
4	Test Not Complete Since Last Clear (01h = Yes)
5	Test Failed Since Last Clear (01h = Yes)
6	Reserved (0)
7	Warning Indicator requested (01h = Yes)

confirmedDTC:
This bit indicates if a set of DTCSnapshotDataRecords was stored in the failure memory and is currently available. The maximum number of stored DTCs is six.
A value of 1 indicates that snapshot information is currently available; a value of 0 indicates that currently there is no snapshot information available.
This bit is reset to 0 after the run of ClearDiagnosticInformation.
This bit is saved in non-volatile memory.

The DTCs are filtered by the DTCStatusMask which is part of the request. The evaluation is done as a bit-wise logical AND-ing operation between the DTCStatusMask and the statusOfDTC. Whenever the result of this AND-ing operation is not zero, the DTC will be part of the list that is sent by the ECU. If the client uses bits in the DTCStatusMask that are not supported by the ECU, the ECU will ignore these bits and just use the bits that are supported.

```
IF [DTCStatusMask & statusOfDTC] > 1
        SEND DTC
ELSE
        DO NOT SEND DTC
```


© This document is the exclusive property of Robert Bosch GmbH. Without their consent it may not be reproduced or given to third parties.
If printed this is a uncontrolled document. The user must verify it is an authorized edition prior to use.

3.3.4.7.1. Request Message

Byte	Bit	Description	Value + Unit	LSB	Offset
1		Request Service Id = [ReadDTCInformation]	$19		
2		Subfunction reportDTCByStatusMask	$02		
3		DTCStatusMask	$xx		

3.3.4.7.2. Response Message

Byte	Bit	Description	Value + Unit	LSB	Offset
1		Response Service Id = [ReadDTCInformation]	$59		
2		Subfunction reportDTCByStatusMask	$02		
3		DTCStatusAvailabilityMask	$B9		
		DTCAndStatusRecord[] = [			
4		DTCHighByte#1	$xx		
5		DTCMiddleByte#1	$xx		
6		DTCLowByte#1	$xx		
7		statusOfDTC#1	$xx		
8		DTCHighByte#2	$xx		
9		DTCMiddleByte#2	$xx		
10		DTCLowByte#2	$xx		
11		statusOfDTC#2	$xx		
..		..	$xx		
..		..	$xx		
n-3		DTCHighByte#m	$xx		
n-2		DTCMiddleByte#m	$xx		
n-1		DTCLowByte#m	$xx		
n		statusOfDTC#m]	$xx		

Remark:

- The parameters DTC #1 and Status of DTC #1 are only present if a least one DTC is available to be reported according to the requested DTC Status Mask.
- The parameters DTC #n and Status of DTC #n are only present if more than one DTCs are available to be reported according to the requested DTC Status Mask.

3.3.4.8. Subfunction $06 - reportDTCExtendedDataRecordByDTCNumber

The Subfunction $06 - reportDTCExtendedDataRecordByDTCNumber can be used to retrieve theenvironmental data from the fault memory.associated with a particular DTC.

3.3.4.8.1. Request Message

Byte	Bit	Description	Value + Unit	LSB	Offset
1		Request Service Id = [ReadDTCInformation]	$19		
2		Subfunction reportDTCExtendedDataRecordByDTCNumber	$06		
		DTCMaskRecord[] = [	$xx		
3		DTCHighByte			
4		DTCMiddleByte			

© This document is the exclusive property of Robert Bosch GmbH. Without their consent it may not be reproduced or given to third parties.
If printed this is a uncontrolled document. The user must verify it is an authorized edition prior to use.

5		DTCLowByte]			
6		DTCExtendedRecordNumber	$01 or $FF		

DTCExtendedRecordNumber
[01h] Reports Record 01 (Standardized Environmental Data)
[FFh] Reports all Records (Standardized Environmental Data and Optional Environmental Data)

© This document is the exclusive property of Robert Bosch GmbH. Without their consent it may not be reproduced or given to third parties.
If printed this is a uncontrolled document. The user must verify it is an authorized edition prior to use.

3.3.4.8.2. Response Message

Byte	Bit	Description	Value + Unit	LSB	Offset
1		Response Service Id = [ReadDTCInformation]	$59		
2		Subfunction reportDTCExtendedDataRecordByDTCNumber	$06		
3 4 5 6		DTCAndStatusRecord[] = [DTCHighByte#1 DTCMiddleByte#1 DTCLowByte#1 statusOfDTC#m]	$xx $xx $xx $xx		
7		ExtendedDataRecord No 1	$01		
8 ..9		Original Odometer Byte #1 Original Odometer (High Byte) Byte #2 Original Odometer (Low Byte) Format: 1 Bit = 16km (unsigned Hex) Range: [0000h] … [F423h] (0km…999984km): Valid Data Range [FFFFh]: Data not available Odometer value at the original (first) instance of a specific fault	$00-FF $00-FF		
10..11		Most Recent Odometer Byte #1 Original Odometer (High Byte) Byte #2 Original Odometer (Low Byte) Format: 1 Bit = 16km (unsigned Hex) Range: [0000h] … [F423h] (0km…999984km): Valid Data Range [FFFFh]: Data not available Odometer value at the most recent instance of a specific fault The Most Recent Odometer is updated when a DTC status is changing from “not active” to “active” and when the DTC status was not active in the previous operation cycle!	$00-FF $00-FF		
12.		Valve Relay Voltage	$00-$FF (0 .. 20.4 V)	0.08	0
13		Battery Voltage	$00-$FF (0 .. 20.4 V)	0.08	0
14	0-6 7	Wheel Speed Front Left Resolution: 1 Bit = 2 km/h (Unsigned Hex) Range: 0 km/h … 252 km/h [00h … 7Eh] Signal not valid: [7Fh] Reserved	$00-$FF (0 .. 252 km/h)	1Bit = 2km/h	0
15	0-6 7	Wheel Speed Front Right Resolution: 1 Bit = 2 km/h (Unsigned Hex) Range: 0 km/h … 252 km/h [00h … 7Eh] Signal not valid: [7Fh] Reserved	$00-$FF (0 .. 252 km/h)	1Bit = 2km/h	0
16	0-6 7	Wheel Speed Rear Left Resolution: 1 Bit = 2 km/h (Unsigned Hex) Range: 0 km/h … 252 km/h [00h … 7Eh] Signal not valid: [7Fh] Reserved	$00-$FF (0 .. 252 km/h)	1Bit = 2km/h	0

© This document is the exclusive property of Robert Bosch GmbH. Without their consent it may not be reproduced or given to third parties.
If printed this is a uncontrolled document. The user must verify it is an authorized edition prior to use.

17	0-6 7	Wheel Speed Rear Right Resolution: 1 Bit = 2 km/h (Unsigned Hex) Range: 0 km/h … 252 km/h [00h … 7Eh] Signal not valid: [7Fh] Reserved	$00-$FF (0 .. 252 km/h)	1Bit = 2km/h	0
18		Power Supply of Valves	0 .. 20.4 V	0.08	0
19		UPump - Supply Pump Voltage Format: 1 Bit = 0,08 V (unsigned Hex) Range: 0 V ... 20,4 V [00h ... FFh] Hint: For RFP control via ANS (Adaptive Noise Shaping) UB (U_{Battt}) Pump is physically measured For all other Pump control UB Pump is set zero	$00 = not applied $01 = applied		
20		Master Cylinder Pressure Format: 1 Bit = 1,00 bar (Unsigned Hex) Range: -43bar … 211bar [00h … FEh] Offset: -43bar Signal not valid: [FFh]	$00 - $FE		
21		Steering Angle (SA) Format: 1 Bit = 6,4 ° (Signed Hex) Range: -819,2 ° ... +806,4 ° [80h … FFh, 00h … 7Eh] Signal not valid: [7Fh]	$00 - $FF		
22		Longitudinal Acceleration (AX) Format: 1 Bit = 0,1574 m/s2 (Signed Hex) Range: -20,14 m/s2 ... +19,83 m/s2 [80h ... FFh, 00h ... 7Eh] Signal not valid: [7Fh]	$00 - $FF		
23		Lateral Acceleration (AY) Format: 1 Bit = 0,1574 m/s2 (Signed Hex) Range: -20,14 m/s2 ... +19,83 m/s2 [80h ... FFh, 00h ... 7Eh] Signal not valid: [7Fh]	$00 - $FF		
24		Yaw Rate (YRS) Format: 1 Bit = 0,902 °/s (Signed Hex) Range: -115,45 m/s2 ... +113,65 m/s2 [80h ... FFh, 00h ... 7Eh] Signal not valid: [7Fh]	$00 - $FF		
25	 0 1 2 3 4 5.. 7	Controller States = [EBD ABS ASR(TCS) MSR(DTC) ESP(VDC) Reserved]	0:disabled / 1:enabled 0/1 0/1 0/1 0/1 0/1 0		

© This document is the exclusive property of Robert Bosch GmbH. Without their consent it may not be reproduced or given to third parties.
If printed this is a uncontrolled document. The user must verify it is an authorized edition prior to use.

3.3.5. Service $22 - ReadDataByIdentifier

3.3.5.1. Description

This service allows the diagnostic tool to request data record values from the ECU identified by Record Data Identifiers. The client request message contains one 2-byte Data Identifier values that identifies the requested Data Record.

3.3.5.2. Availability

Supported Diagnostic Sessions	**X**	defaultSession
	X	extendedDiagnosticSession
Supported Addressing Modes	**X**	physical
	X	functional

3.3.5.3. Request Message

Byte	Bit	Description	Value + Unit	LSB	Offset
1		Request Service Id = [Read Data By Identifier]	$22		
2..3		Identifier	$xxxx		

3.3.5.4. Response Message

Refer to the subsection for each identifier for further details.

3.3.5.5. Negative Response Codes

Value	Description
$13	Incorrect Message Length
$31	Request Out Of Range
$22	Conditions not correct – EEPROM error
$78	Request Correctly Received – Response Pending

© This document is the exclusive property of Robert Bosch GmbH. Without their consent it may not be reproduced or given to third parties.
If printed this is a uncontrolled document. The user must verify it is an authorized edition prior to use.

3.3.5.6. Identifier $F180 - BootSoftwareVersionInformation

This identifier allows identifying the bootloader SW version details.

Byte	Bit	Description	Value + Unit	LSB	Offset
1		Response Service Id = [Read Data By Identifier]	$62		
2..3		Identifier = [BootSoftwareVersionInformation]	$F180		
4		numberOfModules	01		
5..7		Boot Software Version Information Major Byte Year Middle Byte Week Minor Byte Patch Level	 $00-$FF $01-$35 $00-$FF		

3.3.5.7. Identifier $F181 - applicationSoftwareIdentificationDataIdentifier

Byte	Bit	Description	Value + Unit	LSB	Offset
1		Response Service Id = [Read Data By Identifier]	$62		
2..3		Identifier = [applicationSoftwareIdentificationDataIdentifier]	$F181		
4		numberOfModules	01		
5 - 14		Software Part Number – AS Byte #1 Software Part Number High Byte Byte #2 Software Part Number Byte #3 Software Part Number Byte #4 Software Part Number Byte #5 Software Part Number Byte #6 Software Part Number Byte #7 Software Part Number Byte #8 Software Part Number Byte #9 Software Part Number Byte #10 Software Part Number Low Byte	ASCII $00-$FF		

EEPROM data is protected by checksum algorithms. If the EEPROM data is corrupted (e.g. because of power loss during writing) or if the EEPROM contents are empty, the negative response 0x22 will be returned.

Delivery content of all bytes is to be defined separately and not part of this document.

3.3.5.8. Identifier $F186 - activeDiagnosticSessionDataIdentifier

This identifier return the currently active diagnostic session, selected with service ID $10.

Byte	Bit	Description	Value + Unit	LSB	Offset
1		Response Service Id = [Read Data By Identifier]	$62		
2..3		Identifier = [activeDiagnosticSessionDataIdentifier]	$F186		
4		Diagnostic Session Type [01h] Default Diagnostic Session [02h] Programming Session [03h] Extended Diagnostic Session	$xx		

3.3.5.9. Identifier

© This document is the exclusive property of Robert Bosch GmbH. Without their consent it may not be reproduced or given to third parties.
If printed this is a uncontrolled document. The user must verify it is an authorized edition prior to use.

$F190 - VINDataIdentifier

This identifier returns the Vehicle Identification Number, which is stored in EEPROM. Refer to service ID $2E for changing the data of this identifier. A range of 17 bytes of EEPROM is reserved, which allows storing the VIN in ASCII format.

Byte	Bit	Description	Value + Unit	LSB	Offset
1		Response Service Id = [Read Data By Identifier]	$62		
2..3		Identifier = [VINDataIdentifier]	$F190		
4 .. 20		Vehicle Identification Number	17-byte ASCII		

EEPROM data is protected by checksum algorithms. If the EEPROM data is corrupted the negative response 0x22 will be returned.

Delivery content of all bytes is 0x30.

3.3.5.10. Identifier $F191 - vehicleManufacturerECUHardwareNumberDataIdentifier

Byte	Bit	Description	Value + Unit	LSB	Offset
1		Response Service Id = [Read Data By Identifier]	$62		
2..3		Identifier = [vehicleManufacturerECUHardwareNumberDataIdentifier]	$F191		
4 - 13		Hardware Part Number – AS Byte #1 Hardware Part Number High Byte Byte #2 Hardware Part Number Byte #3 Hardware Part Number Byte #4 Hardware Part Number Byte #5 Hardware Part Number Byte #6 Hardware Part Number Byte #7 Hardware Part Number Byte #8 Hardware Part Number Byte #9 Hardware Part Number Byte #10 Hardware Part Number Low Byte	ASCII $00-$FF		

EEPROM data is protected by checksum algorithms. If the EEPROM data is corrupted (e.g. because of power loss during writing) or if the EEPROM contents are empty, the negative response 0x22 will be returned.

Delivery content of all bytes is to be defined separately and not part of this document.

3.3.5.11. Identifier $F193 - systemSupplierECUHardwareVersionNumberDataIdentifier

This identifier allows identifying the HW version details.

Byte	Bit	Description	Value + Unit	LSB	Offset
1		Response Service Id = [Read Data By Identifier]	$62		
2..3		Identifier = [systemSupplierECUHardwareVersionNumberDataIdentifier]	$F193		

© This document is the exclusive property of Robert Bosch GmbH. Without their consent it may not be reproduced or given to third parties.
If printed this is a uncontrolled document. The user must verify it is an authorized edition prior to use.

4..6		Hardware Version Information Major Byte Year Middle Byte Week Minor Byte Patch Level	 $00-$FF $01-$35 $00-$FF		

3.3.5.12. Identifier $F194 - *systemSupplierECUSoftwareNumberDataIdentifier*

This identifier allows identifying the application SW details.

Byte	Bit	Description	Value + Unit	LSB	Offset
1		Response Service Id = [Read Data By Identifier]	$62		
2..3		Identifier = [systemSupplierECUSoftwareNumberDataIdentifier]	$F194		
4 - 8		Bosch Software BB-Number Byte #1 Bosch BB-Number – (High Byte) Byte #2 Bosch BB-Number Byte #3 Bosch BB-Number Byte #4 Bosch BB-Number Byte #5 Bosch BB-Number – (Low Byte)	ASCII $00-$FF		
9..16		Bosch Software Version Number Byte #1 Bosch Software Version Number – (MSB) Byte #2 Bosch Software Version Number Byte #3 Bosch Software Version Number Byte #4 Bosch Software Version Number Byte #5 Bosch Software Version Number Byte #6 Bosch Software Version Number Byte #7 Bosch Software Version Number Byte #8 Bosch Software Version Number – (LSB)	ASCII $00-$FF		

3.3.5.13. Identifier $F195 - *systemSupplierECUSoftwareVersionNumberDataIdentifier*

This identifier allows identifying the SW version details.

Byte	Bit	Description	Value + Unit	LSB	Offset
1		Response Service Id = [Read Data By Identifier]	$62		
2..3		Identifier = [systemSupplierECUSoftwareVersionNumberDataIdentifier]	$F195		
4..6		Software Version Information Major Byte Year Middle Byte Week Minor Byte Patch Level	 $00-$FF $01-$35 $00-$FF		

3.3.5.14. Identifier $FD00 - speedInformationDataIdentifier

This identifier allows reading information about the current vehicle and wheel speeds.

Byte	Bit	Description	Value + Unit	LSB	Offset
1		Response Service Id = [Read Data By Identifier]	$62		
2..3		Identifier = [speedInformationDataIdentifier]	$FD00		

© This document is the exclusive property of Robert Bosch GmbH. Without their consent it may not be reproduced or given to third parties.
If printed this is a uncontrolled document. The user must verify it is an authorized edition prior to use.

Byte	Bit	Description	Value + Unit	LSB	Offset
4 .. 5		Wheel Speed Front Left Byte #1 Wheel Speed (High Byte) Byte #2 Wheel Speed (Low Byte) Format: 1 Bit = 0,0078125 km/h (unsigned Hex) Range: 0 km/h … 360 km/h [0000h … B400h] Wheel Speed Invalid [FFFFh]	$00-$FF		0
6 .. 7		Wheel Speed Front Right Byte #1 Wheel Speed (High Byte) Byte #2 Wheel Speed (Low Byte) Format: 1 Bit = 0,0078125 km/h (unsigned Hex) Range: 0 km/h … 360 km/h [0000h … B400h] Wheel Speed Invalid [FFFFh]	$00-$FF		0
8 .. 9		Wheel Speed Rear Left Byte #1 Wheel Speed (High Byte) Byte #2 Wheel Speed (Low Byte) Format: 1 Bit = 0,0078125 km/h (unsigned Hex) Range: 0 km/h … 360 km/h [0000h … B400h] Wheel Speed Invalid [FFFFh]	0 .. 250 km/h	0.05625	0
10 .. 11		Wheel Speed Rear Right Byte #1 Wheel Speed (High Byte) Byte #2 Wheel Speed (Low Byte) Format: 1 Bit = 0,0078125 km/h (unsigned Hex) Range: 0 km/h … 360 km/h [0000h … B400h] Wheel Speed Invalid [FFFFh]	0 .. 250 km/h	0.05625	0

3.3.5.15. Identifier $FD01 - inputDataIdentifier

This identifier allows reading information about several ECU inputs.

Byte	Bit	Description	Value + Unit	LSB	Offset
1		Response Service Id = [Read Data By Identifier]	$62		
2..3		Identifier = [inputDataIdentifier]	$FD01		
4		Battery Voltage	0 .. 20.4 V	0.08	0
5		Brake Light Switch	$00 = not applied $01 = applied		
6		reserved	$00		

[1] this byte is not supported with ABS, value is 0

3.3.5.16. Identifier $FD02 - actuationStateDataIdentifier

This identifier allows reading information about the actuation state of the ECU's actuators.

Byte	Bit	Description	Value + Unit	LSB	Offset
1		Response Service Id = [Read Data By Identifier]	$62		
2..3		Identifier = [actuationStateDataIdentifier]	$FD02		
4	0	Valve Actuation State: Inlet Valve Front Left (EVFL)	0 = inactive, 1 = active		
	1	Valve Actuation State: Outlet Valve Front Left (AVFL)	0 = inactive, 1 = active		
	2	Valve Actuation State: Inlet Valve Front Right (EVFR)	0 = inactive, 1 = active		
	3	Valve Actuation State: Outlet Valve Front Left (AVFR)	0 = inactive, 1 = active		
	4	Valve Actuation State: Inlet Valve Rear Left (EVRL)	0 = inactive, 1 = active		
	5	Valve Actuation State: Outlet Valve Rear Left (AVRL)	0 = inactive, 1 = active		
	6	Valve Actuation State: Inlet Valve Rear Right (EVRR)	0 = inactive, 1 = active		
	7	Valve Actuation State: Outlet Valve Rear Left (AVRR)	0 = inactive, 1 = active		
5	0	Valve Actuation State: Valve USV1	0 = inactive, 1 = active		

© This document is the exclusive property of Robert Bosch GmbH. Without their consent it may not be reproduced or given to third parties.
If printed this is a uncontrolled document. The user must verify it is an authorized edition prior to use.

Byte	Bit	Description	Value + Unit	LSB	Offset
	1	Valve Actuation State: Valve USV2	0 = inactive, 1 = active		
	2	Valve Actuation State: Valve HSV1	0 = inactive, 1 = active		
	3	Valve Actuation State: Valve HSV2	0 = inactive, 1 = active		
	4	Valve Relay Status	0 = inactive, 1 = active		
	5	Pump Motor Status	0 = inactive, 1 = active		
	6	Electric Vacuum Pump	0 = inactive, 1 = active		
	7	Reserved	0		

[1] this byte is not supported with ABS, value is 0

3.3.5.17. Identifier $FD03 – systemSensorDataIdentifier

This identifier allows reading information about the sensors delivering data to the ECU.

Byte	Bit	Description	Value + Unit	LSB	Offset
1		Response Service Id = [Read Data By Identifier]	$62		
2..3		Identifier = [systemSensorDataIdentifier]	$FD03		
4 .. 5		Master Cylinder Pressure Byte #1 Master Cylinder Pressure (High Byte) Byte #2 Master Cylinder Pressure (Low Byte) Format: 1 Bit = 0,01530 bar (signed Hex) Range: -42,5 bar … +425,0 bar [F526h … FFFFh, 0000h … 6C82h]	$00 - $FF		0
6	0 1-7	Status of Master Cylinder Pressure Status of Master Cylinder Pressure signal [00h] = signal valid [01h] = signal invalid Reserved (set to zero)	$00 - $FF		
7 .. 8		Steering Angle Byte #1 Steering Angle (High Byte) Byte #2 Steering Angle (Low Byte) Format: 1 Bit = 0,1 ° (signed Hex) Range: -720 ° … +720 ° [E3E0h … FFFFh, 0000h … 1C20h]	$00 - $FF		0
9	0 1-7	Status of Steering Angle Sensor (SA) Status of SA signal [00h] = signal valid [01h] = signal invalid Reserved (set to zero)	$00 - $FF		
10 .. 11		Yaw Rate Byte #1 Yaw Rate (High Byte) Byte #2 Yaw Rate (Low Byte) Format: 1 Bit = 0,12219 °/s (signed Hex) Range: -120,0 °/s … +120,0 °/s [FC2Ah … FFFFh, 0000h … 03D6h]	$00 - $FF		0
12	0 1-7	Status of Yaw Rate (YR) Bit 0 Status of YR signal [00h] = signal valid [01h] = signal invalid Bit 1...7 Reserved (set to zero)	$00 - $FF		
13 .. 14		Lateral Acceleration Byte #1 Lateral Acceleration (High Byte) Byte #2 Lateral Acceleration (Low Byte) Format: 1 Bit = 0,02713 m/s2 (signed Hex) Range: -21,59 m/s2 … +21,59 m/s2 [FCE4h … FFFFh, 0000h, … 031Ch]	$00 - $FF		0

© This document is the exclusive property of Robert Bosch GmbH. Without their consent it may not be reproduced or given to third parties.
If printed this is a uncontrolled document. The user must verify it is an authorized edition prior to use.

15	0 1-7	Status of Lateral Acceleration (AY) Status of AY signal [00h] = signal valid [01h] = signal invalid Reserved (set to zero)	$00 - $FF		
16 .. 17		Longitudinal Acceleration Byte #1 Longitudinal Acceleration (High Byte) Byte #2 Longitudinal Acceleration (Low Byte) Format: 1 Bit = 0,02713 m/s2 (signed Hex) Range: -21,59 m/s2 … +21,59 m/s2 [FCE4h … FFFFh, 0000h, … 031Ch]	$00 - $FF		
18	0 1-7	Status of Longitudinal Acceleration (AX) Status of AX signal [00h] = signal valid [01h] = signal invalid Reserved (set to zero)	$00 - $FF		
19 .. 20		Pressure Vacuum Sensor Byte #1 Pressure from Vacuum Sensor (High Byte) Byte #2 Pressure from Vacuum Sensor (Low Byte) Range: -2047.6 to 2047 mbar Format: 1 Bit = 0,001 bar (signed Hex)	$00 - $FF		

3.3.5.18. Identifier $FD04 – controllerStatusDataIdentifier

This identifier allows reading information about the current controller status.

Byte	Bit	Description	Value + Unit	LSB	Offset
1		Response Service Id = [Read Data By Identifier]	$62		
2..3		Identifier = [controllerStatusDataIdentifier]	$FD04		
1	0	ABS Controller Status	$00 = deactivated $01 = available		
1	1	TCS Controller Status	$00 = deactivated $01 = available		
1	2	ESP Controller Status	$00 = deactivated $01 = available		
1	3	EBD Controller Status	$00 = deactivated $01 = available		
1	4-7	reserved			

3.3.6. Service $28 – Communication Control

3.3.6.1. Description

The purpose of this service is to switch on/ off the transmission of ECU messages (e.g. application communication messages)
The ECU is enabling the transmission of CAN-messages when switching the ECU to the Default

© This document is the exclusive property of Robert Bosch GmbH. Without their consent it may not be reproduced or given to third parties.
If printed this is a uncontrolled document. The user must verify it is an authorized edition prior to use.

Session (by Service Start Default Diagnostic Session, ECU Reset or P3-Timeout)

3.3.6.2. Availability

Supported Diagnostic Sessions		defaultSession
	X	extendedDiagnosticSession
Supported Addressing Modes	**X**	physical
	X	functional

3.3.6.3. Request Message

Byte	Bit	Description	Value + Unit	LSB	Offset
1		Request Service Id = [CommunicationControl]	$28		
2	0-6 7	Subfunction Control Type [00h] = EnableRxAndEnableTx [01h] = EnableRxAndDisableTx Suppress Positive Response Message Indication Bit [00h] = ECU is sending a positive response message [01h] = ECU is not sending a positive response message			
3	0 1-7	communicationType Normal Communication Messages [00h]= Off; [01h]= On Reserved (set to zero)			

3.3.6.4. Response Message

Byte	Bit	Description	Value + Unit	LSB	Offset
1		Response Service Id = [Write Data By Identifier]	$68		

3.3.6.5. Negative Response Codes

Value	Description
$13	Incorrect Message Length
$31	Request Out Of Range
$7F	Service Not Supported in Active Session

3.3.7. Service $2E – WriteDataByIdentifier

3.3.7.1. Description

This service allows the diagnostic tool to write data records into the ECU identified by Record Data Identifiers. The client request message contains one 2-byte Data Identifier values that identifies the requested Data Record.

© This document is the exclusive property of Robert Bosch GmbH. Without their consent it may not be reproduced or given to third parties.
If printed this is a uncontrolled document. The user must verify it is an authorized edition prior to use.

3.3.7.2. Availability

Supported Diagnostic Sessions		defaultSession
	X	extendedDiagnosticSession
Supported Addressing Modes	**X**	physical
		functional

3.3.7.3. Request Message

Refer to the subsection for each identifier for further details.

3.3.7.4. Response Message

Byte	Bit	Description	Value + Unit	LSB	Offset
1		Response Service Id = [Write Data By Identifier]	$6E		
2..3		Identifier	$xxxx		

3.3.7.5. Negative Response Codes

Value	Description
$13	Incorrect Message Length
$31	Request Out Of Range
$78	Request Correctly Received – Response Pending

–

3.3.7.6. Identifier $F190 – VINDataIdentifier

This identifier writes the Vehicle Identification Number, which is stored in EEPROM. Refer to service ID $22 for reading the data of this identifier. A range of 17 bytes of EEPROM is reserved, which allows to store the VIN in ASCII format.

Byte	Bit	Description	Value + Unit	LSB	Offset
1		Request Service Id = [Write Data By Identifier]	$2E		
2..3		Identifier = [VINDataIdentifier]	$F190		
4 .. 20		Vehicle Identification Number	17-byte Hex		

3.3.8. Service $2F – Input Output Control By Identifier

3.3.8.1. Description

The service Input Output Control By Local Identifier is used by the diagnostic tool to substitute a value for an input signal and / or control an output (actuator) of the ECU.

© This document is the exclusive property of Robert Bosch GmbH. Without their consent it may not be reproduced or given to third parties.
If printed this is a uncontrolled document. The user must verify it is an authorized edition prior to use.

3.3.8.2. Availability

Supported Diagnostic Sessions		defaultSession
	X	extendedDiagnosticSession
Supported Addressing Modes	**X**	physical
		functional

3.3.8.3. Request Message

Refer to the subsection for each identifier for further details.

3.3.8.4. Negative Response Codes

Value	Description
$13	Incorrect Message Length
$31	Request Out Of Range
$7F	**Service Not Supported in Active Session**

3.3.8.5. Control Type 00h - Return Control To ECU

3.3.8.5.1. Positive Response Message

Byte	Bit	Description	Value + Unit
1		Positive Response Service Id = [Input Output Control By Identifier]	$6F
2 3		Data Identifier Byte #1 Data Identifier High Byte Byte #2 Data Identifier Low Byte	$00-FF $00-FF
4		Input Output Control Type = [Return Control To ECU]	$00

3.3.8.5.2. Identifier D00Dh - Electrical Vacuum Pump

Byte	Bit	Description	Coding	Hex
1		Request Service Id = [Input Output Control By Identifier]	Hex	2F
2 3		Data Identifier = [Electrical Vacuum Pump] Byte #1 Data Identifier High Byte Byte #2 Data Identifier Low Byte	Hex	D0 0D
4		Input Output Control Type = [Return Control To ECU]	Hex	00

3.3.8.6. Control Type 03h - Short Term Adjustment

3.3.8.6.1. Positive Response Message

© This document is the exclusive property of Robert Bosch GmbH. Without their consent it may not be reproduced or given to third parties.
If printed this is a uncontrolled document. The user must verify it is an authorized edition prior to use.

Byte	Bit	Description	Value + Unit
1		Positive Response Service Id = [Input Output Control By Identifier]	$6F
2 3		Data Identifier Byte #1 Data Identifier High Byte Byte #2 Data Identifier Low Byte	$00-FF $00-FF
4		Input Output Control Type = [Short Term Adjustment]	$03

3.3.8.6.2. Identifier D00Dh - Electrical Vacuum Pump

Byte	Bit	Description	Coding	Hex
1		Request Service Id = [Input Output Control By Identifier]	Hex	2F
2 3		Data Identifier = [Electrical Vacuum Pump] Byte #1 Data Identifier High Byte Byte #2 Data Identifier Low Byte	Hex	D0 0D
4		Input Output Control Type = [Short Term Adjustment]	Hex	03
5	0 1-7	Electrical Vacuum Pump Electrical Vacuum Pump [00h] = disable [01h] = enable Reserved (set to zero)	Hex	00-01

3.3.9. Service $31 – RoutineControl

3.3.9.1. Description

The Routine Control service is used by a diagnostic tool to start a routine, to stop a routine and to request the routine results.

Note that the actual description of the end-of-line testing, evacuation/filling and repair bleeding sequences are described in separate documents, provided by CC/ESU1.

3.3.9.2. Availability

Supported Diagnostic Sessions		defaultSession
	X	extendedDiagnosticSession
Supported Addressing Modes	**X**	physical
	X	functional

3.3.9.3. Request Message

Refer to the sub-sections for each routine control type and identifier for details.

3.3.9.4. Response Message

Refer to the sub-sections for each routine control type and identifier for details.

3.3.9.5. Negative Response Codes

© This document is the exclusive property of Robert Bosch GmbH. Without their consent it may not be reproduced or given to third parties.
If printed this is a uncontrolled document. The user must verify it is an authorized edition prior to use.

Value	Description
$12	Sub Function Not Supported
$13	Incorrect Message Length
$22	Conditions Not Correct
$24	Request Sequence Error
$31	Request Out Of Range
$78	Request Correctly Received – Response Pending

3.3.9.6. Routine Control Type $01 – Start Routine

3.3.9.6.1. Response Message

Byte	Bit	Description	Value + Unit	LSB	Offset
1		Response Service Id = [Routine Control]	$71		
2		Sub Function = [Start Routine]	$01		
3..4		Routine Identifier	$xxxx		
5		Routine Status Byte	$01 = start successful $02 = already started $03 = start not possible *Only used if no RequestRoutineResult identifier is supported:* $04 = finished $05 = routine error		

3.3.9.6.2. Identifier $F000 – EvacAndFill

Byte	Bit	Description	Value + Unit	LSB	Offset
1		Request Service Id = [Routine Control]	$31		
2	0..6	Sub Function = [Start Routine]	$01		
	7	Suppress Positive Response Bit	0 = ECU is sending a positive response 1 = ECU is not sending a positive response		
3..4		Routine Identifier = [EvacAndFill]	$F000		
5		Evac and fill time Format: 1 Bit = 1s (unsigned Hex) Range: 1s … 150s (01h ... 96h)	$01-$96	1	0
6		Time until start of pump motor Resolution: 1 Bit = 1s (unsigned Hex) Range:: [01h ... FEh] = 1 … 254s [00h] = 1s [FFh] = “Pump motor is not running”	$00-$FF	1	0

<u>Evac and fill time</u>
After evac and filling time, the pump motor will run for 2 additional seconds, if the delay time in byte 6 is not $FF.

3.3.9.6.3. Identifier $F001 – RepairBleed

Byte	Bit	Description	Value + Unit	LSB	Offset

© This document is the exclusive property of Robert Bosch GmbH. Without their consent it may not be reproduced or given to third parties.
If printed this is a uncontrolled document. The user must verify it is an authorized edition prior to use.

Byte	Bit	Description	Value + Unit	LSB	Offset
1		Request Service Id = [Routine Control]	$31		
2	0..6	Sub Function = [Start Routine]	$01		
	7	Suppress Positive Response Bit	0 = ECU is sending a positive response 1 = ECU is not sending a positive response		
3..4		Routine Identifier = [RepairBleed]	$F001		
5		Repair bleeding phase [01h] = EOL Repair Bleeding Phase 1 [02h] = EOL Repair Bleeding Phase 2 [03h] = EOL Repair Bleeding Phase 3 [04h] = EOL Repair Bleeding Phase 4	1 .. 4		
6		Repetition counter [03h] = 3 repetitions [04h] = 4 repetitions [05h] = 5 repetitions This Parameter is always required, but only valid for Phase 3, 4	3 .. 5		

Repair bleeding phase
The Repair Bleeding function should always be executed in increasing phase sequence starting with Phase 1. A repetition of the same phase is allowed, but no phase shall be skipped. If this is not assured, the pump might be damaged due to dry run.

Repetition counter
This parameter defines the number of inner loop repetitions in phase 3 and 4. This Parameter is always required, but only valid for Phase 3, 4. For other phases, it is ignored.

3.3.9.6.4. Identifier $F002 – WheelSpeedSensorTest

The “Wheel Speed Sensor Test” is used to check the correct connection, correlation and function of the wheel speed sensors as well as a damaged multi pole wheel. A wrong air gap or eccentricity will also be detected. The test can be executed for both acceleration and deceleration.
The “Wheel Speed Sensor Test” requires a brake dynamometer with the possibility to actuate each wheel on the test bench.

Byte	Bit	Description	Value + Unit	LSB	Offset
1		Request Service Id = [Routine Control]	$31		
2	0..6	Sub Function = [Start Routine]	$01		
	7	Suppress Positive Response Bit	0 = ECU is sending a positive response 1 = ECU is not sending a positive response		
3..4		Routine Identifier = [WheelSpeedSensorTest]	$F002		
5 .. 6		VStopp Format 1 Bit = 0,01km/h (Unsigned Hex) Range: 0km/h ... 655,35km/h (theoretically)[0000h ... FFFFh]	$00-$FF		
7		Testing Phase Format [00h] = Deceleration; [01h] = Acceleration Reserved (set to zero)	$00-$01		

© This document is the exclusive property of Robert Bosch GmbH. Without their consent it may not be reproduced or given to third parties.
If printed this is a uncontrolled document. The user must verify it is an authorized edition prior to use.

3.3.9.6.5. Identifier $F003 - StaticTest

Byte	Bit	Description	Value + Unit	LSB	Offset
1		Request Service Id = [Routine Control]	$31		
2	0..6	Sub Function = [Start Routine]	$01		
	7	Suppress Positive Response Bit	0 = ECU is sending a positive response 1 = ECU is not sending a positive response		
3..4		Routine Identifier = [StaticTest]	$F003		

© This document is the exclusive property of Robert Bosch GmbH. Without their consent it may not be reproduced or given to third parties.
If printed this is a uncontrolled document. The user must verify it is an authorized edition prior to use.

3.3.9.6.6. Identifier $F00A– Actuator Test

The Actuator Test will be used to check the hydraulic connections, the tightness and correlation of the valves, the function of the pump and the air in the brake system. This test controls up to 4 actuators according to the actuation pattern shown below.

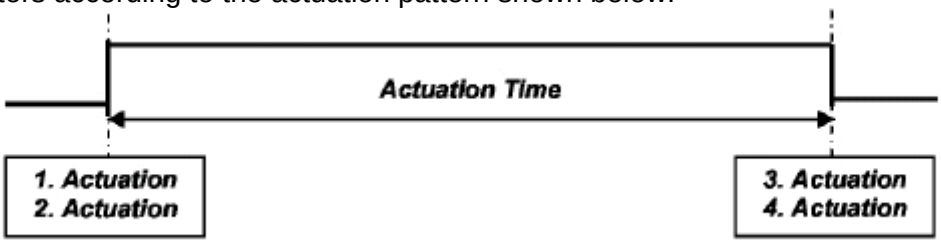

Byte	Bit	Description	Coding	Hex Val
1		Request Service Id = [Routine Control]		31
2		Sub Function Routine Control Type [01h] = Start Routine		01
		Routine Identifier = [Actuator Test]		
3		Byte #1 Routine Identifier High Byte	Hex	F0
4		Byte #2 Routine Identifier Low Byte	Hex	04
		Actuation 1		
5		Byte #1 Actuator 1 Value High Byte	Hex	00-00
6		Byte #2 Actuator 1 Value Low Byte	Hex	00-64
7		Byte #3 Actuator 1 Identifier High Byte	Hex	00-FF
8		Byte #4 Actuator 1 Identifier Low Byte	Hex	00-FF
		Actuation 2		
9		Byte #1 Actuator 2 Value High Byte	Hex	00-00
10		Byte #2 Actuator 2 Value Low Byte	Hex	00-64
11		Byte #3 Actuator 2 Identifier High Byte	Hex	00-FF
12		Byte #4 Actuator 2 Identifier Low Byte	Hex	00-FF
		Actuation Time		
13		Byte #1 Actuation Time High Byte	Hex	00-FF
14		Byte #2 Actuation Time Low Byte	Hex	00-FF
		Format 1 Bit = 10 ms (Unsigned Hex)		
		Range: 10 ms ... 327,67 s [0001h ... 7FFFh] other values are undefined!		
		Actuation 3		
15		Byte #1 Actuator 3 Value High Byte	Hex	00-00
16		Byte #2 Actuator 3 Value Low Byte	Hex	00-64
17		Byte #3 Actuator 3 Identifier High Byte	Hex	00-FF
18		Byte #4 Actuator 3 Identifier Low Byte	Hex	00-FF
		Actuation 4		
19		Byte #1 Actuator 4 Value High Byte	Hex	00-00
20		Byte #2 Actuator 4 Value Low Byte	Hex	00-64
21		Byte #3 Actuator 4 Identifier High Byte	Hex	00-FF
22		Byte #4 Actuator 4 Identifier Low Byte	Hex	00-FF

© This document is the exclusive property of Robert Bosch GmbH. Without their consent it may not be reproduced or given to third parties.
If printed this is a uncontrolled document. The user must verify it is an authorized edition prior to use.

3.3.9.6.7. Identifier $F100 – SensorCalibrationCalibration

This Identifier is not supported for ABS

Byte	Bit	Description	Value + Unit	LSB	Offset
1		Request Service Id = [Routine Control]	$31		
2	0..6	Sub Function = [Start Routine]	$01		
	7	Suppress Positive Response Bit	0 = ECU is sending a positive response 1 = ECU is not sending a positive response		
3..4		Routine Identifier = [SASCalibration]	$F100		
5	 0 1 2-7	Routine parameter Reserved (set to zero) Calibrate AX –Ay Sensor [00h] = No; [01h] = Yes Reserved (set to zero)			

3.3.9.7. Routine Control Type $02 - Stop Routine

3.3.9.7.1. Request Message

Byte	Bit	Description	Value + Unit	LSB	Offset
1		Request Service Id = [Routine Control]	$31		
2	0..6	Sub Function = [Start Routine]	$02		
	7	Suppress Positive Response Bit	0 = ECU is sending a positive response 1 = ECU is not sending a positive response		
3..4		Routine Identifier	$F000 = EvacFill $F001 = RepairBleed $F002 = WSSTest $F003 = StaticTest $F004=ActuatorTest		

3.3.9.7.2. Response Message

Byte	Bit	Description	Value + Unit	LSB	Offset
1		Response Service Id = [Routine Control]	$71		
2		Sub Function = [Start Routine]	$02		
3..4		Routine Identifier	$xxxx		
5		Routine Status Byte	$01 = stop successful $02 = already stopped or not started $03 = routine stopped abnormally		

3.3.9.8. Routine Control Type $03 - Request Routine Results

3.3.9.8.1. Request Message

Byte	Bit	Description	Value + Unit	LSB	Offset
1		Request Service Id = [Routine Control]	$31		

© This document is the exclusive property of Robert Bosch GmbH. Without their consent it may not be reproduced or given to third parties.
If printed this is a uncontrolled document. The user must verify it is an authorized edition prior to use.

Byte	Bit	Description	Value + Unit	LSB	Offset
2	0..6	Sub Function = [RoutineResult]	$03		
	7	Suppress Positive Response Bit	0 = ECU is sending a positive response 1 = ECU is not sending a positive response		
3..4		Routine Identifier	$xxxx		

3.3.9.8.2. Identifier $F000 - EvacAndFill

Byte	Bit	Description	Value + Unit	LSB	Offset
1		Response Service Id = [Routine Control]	$71		
2		Sub Function = [RoutineResult]	$03		
3..4		Routine Identifier = [EvacAndFill]	$F000		
5		Routine Status Byte	01 = Routine completed successfully 02 = Routine not yet completed 03 = Routine canceled by ECU 04 = Routine Identifier not correct 05 = Routine cancelled by Tester 06 = Routine was not started$01 = finished $02 = still running $03 = stopped or not started $04 = routine stopped abnormally		

3.3.9.8.3. Identifier $F001 - Repair Bleed

Byte	Bit	Description	Value + Unit	LSB	Offset
1		Response Service Id = [Routine Control]	$71		
2		Sub Function = [RoutineResult]	$03		
3..4		Routine Identifier = [RepairBleed]	$F001		
5		Routine Status Byte	01 = Routine completed successfully 02 = Routine not yet completed 03 = Routine canceled by ECU 04 = Routine Identifier not correct 05 = Routine cancelled by Tester 06 = Routine was not started$01 = finished $02 = still running $03 = stopped or not started $04 = routine stopped abnormally		

© This document is the exclusive property of Robert Bosch GmbH. Without their consent it may not be reproduced or given to third parties.
If printed this is a uncontrolled document. The user must verify it is an authorized edition prior to use.

3.3.9.8.4. Identifier $F002 - WheelSpeedSensorTest

Byte	Bit	Description	Value + Unit
1		Response Service Id = [Routine Control]	$71
2		Sub Function = [RoutineResult]	$03
3..4		Routine Identifier = [WheelSpeedSensorTest]	$F002
5		Routine Status Byte	01 = Routine completed successfully 02 = Routine not yet completed 03 = Routine canceled by ECU 04 = Routine Identifier not correct 05 = Routine cancelled by Tester 06 = Routine was not started$01 = finished $02 = still running $03 = stopped or not started $04 = routine stopped abnormally
6 .. 7		Vst FL Byte #1 High Byte Byte #2 Low Byte Format 1 Bit = 0,01km/h (Unsigned Hex) Range: 0km/s ... 655,35km/s (theoretically)[0000h ... FFFFh]Wheel Speed Front Left, maximum	00-FF 00-FF-100 .. 100 m/s
8 .. 9		Vst FR Byte #1 High Byte Byte #2 Low Byte Format 1 Bit = 0,01km/h (Unsigned Hex) Range: 0km/s ... 655,35km/s (theoretically)[0000h ... FFFFh]Wheel Speed Front Left, minimum	00-FF 00-FF-100 .. 100 m/s
10 .. 11		Vst RL Byte #1 High Byte Byte #2 Low Byte Format 1 Bit = 0,01km/h (Unsigned Hex) Range: 0km/s ... 655,35km/s (theoretically)[0000h ... FFFFh]Wheel Speed Front Right, maximum	00-FF 00-FF-100 .. 100 m/s
12 .. 13		Vst RR Byte #1 High Byte Byte #2 Low Byte Format 1 Bit = 0,01km/h (Unsigned Hex) Range: 0km/s ... 655,35km/s (theoretically)[0000h ... FFFFh]Wheel Speed Front Right, minimum	00-FF 00-FF-100 .. 100 m/s
14 .. 15		dV FL Byte #1 High Byte Byte #2 Low Byte Format 1 Bit = 0,01km/h (Unsigned Hex) Range: 0km/s ... 655,35km/s (theoretically)[0000h ... FFFFh]Wheel Speed Rear Left, maximum	00-FF 00-FF-100 .. 100 m/s
16 .. 17		dV FR Byte #1 High Byte Byte #2 Low Byte Format 1 Bit = 0,01km/h (Unsigned Hex) Range: 0km/s ... 655,35km/s (theoretically)[0000h ... FFFFh]Wheel Speed Rear Left, minimum	00-FF 00-FF-100 .. 100 m/s
18 .. 19		dV RL Byte #1 High Byte Byte #2 Low Byte Format 1 Bit = 0,01km/h (Unsigned Hex)	00-FF 00-FF-100 .. 100 m/s

© This document is the exclusive property of Robert Bosch GmbH. Without their consent it may not be reproduced or given to third parties.
If printed this is a uncontrolled document. The user must verify it is an authorized edition prior to use.

		Range: 0km/s ... 655,35km/s (theoretically)[0000h ... FFFFh]Wheel Speed Rear Right, maximum	
20 .. 21		dV RR Byte #1 High Byte Byte #2 Low Byte Format 1 Bit = 0,01km/h (Unsigned Hex) Range: 0km/s ... 655,35km/s (theoretically)[0000h ... FFFFh]Wheel Speed Rear Right, minimum	00-FF 00-FF-100 .. 100 m/s

3.3.9.8.5. Identifier $F003 - DynamicTestStaticTest

Byte	Bit	Description	Value + Unit	LSB	Offset
1		Response Service Id = [Routine Control]	$71		
2		Sub Function = [RoutineResult]	$03		
3..4		Routine Identifier = [DynamicTest]	$F003		
5		Routine Status Byte	01 = Routine completed successfully 02 = Routine not yet completed 03 = Routine canceled by ECU 04 = Routine Identifier not correct 05 = Routine cancelled by Tester 06 = Routine was not started$01 = finished $02 = still running $03 = stopped or not started $04 = routine stopped abnormally		
6 .. 7		Wheel Speed Delta Front Left	-100 .. 100 m/s	1/64	0
8 .. 9		Wheel Speed Delta Front Right	-100 .. 100 m/s	1/64	0
10 .. 11		Wheel Speed Delta Rear Left	-100 .. 100 m/s	1/64	0
12 .. 13		Wheel Speed Delta Rear Right	-100 .. 100 m/s	1/64	0

3.3.9.8.6. Identifier $F00A F004 – ActuatorTest

Byte	Bit	Description	Value + Unit	LSB	Offset
1		Response Service Id = [Routine Control]	$71		
2		Sub Function = [RoutineResult]	$03		
3..4		Routine Identifier = [ActuatorTest]	$F00AF004		
5		Routine Status Byte	01 = Routine completed successfully 02 = Routine not yet completed 03 = Routine canceled by ECU 04 = Routine Identifier not correct 05 = Routine cancelled by Tester 06 = Routine was not started$01 = finished $02 = still running $03 = stopped or not started $04 = routine stopped abnormally		

© This document is the exclusive property of Robert Bosch GmbH. Without their consent it may not be reproduced or given to third parties.
If printed this is a uncontrolled document. The user must verify it is an authorized edition prior to use.

3.3.10. Service $3E - TesterPresent

3.3.10.1. Description

This service is used to indicate to an ECU that the diagnostic tool is still connected to the vehicle and that diagnostic sessions are to remain active.

3.3.10.2. Availability

Supported Diagnostic Sessions	**X**	defaultSession
	X	extendedDiagnosticSession
Supported Addressing Modes	**X**	physical
	X	functional

3.3.10.3. Request Message

Byte	Bit	Description	Value + Unit	LSB	Offset
1		Request Service Id = [Tester Present]	$3E		
2	0..6	Sub Function = [Zero Sub Function]	$00		
	7	Suppress Positive Response Bit	0 = ECU is sending a positive response 1 = ECU is not sending a positive response		

3.3.10.4. Response Message

Byte	Bit	Description	Value + Unit	LSB	Offset
1		Response Service Id = [Tester Present]	$7E		
2		Sub Function = [Zero Sub Function]	$00		

3.3.10.5. Negative Response Codes

Value	Description
$12	Sub Function Not Supported
$13	Incorrect Message Length

© This document is the exclusive property of Robert Bosch GmbH. Without their consent it may not be reproduced or given to third parties.
If printed this is a uncontrolled document. The user must verify it is an authorized edition prior to use.

3.3.11. Service $7F - Negative Response

3.3.11.1. Description

This section does not describe a diagnostic service itself, but provides additional details about the used negative response codes.

3.3.11.2. Response Message

Byte	Bit	Description	Value + Unit	LSB	Offset
1		Response Service Id = [Negative Response]	$7F		
2		Request Service ID	$xx		
3		Negative Response Code	$xx		

3.3.11.3. Negative Response Codes

Negative Response Codes	
11h	**Service Not Supported** This response code indicates that the requested action will not be taken because the ECU does not support the requested service
12h	**Sub Function Not Supported** This response code indicates that the requested action will not be taken because the ECU does not support the requested sub function
13h	**Incorrect Message Length or Invalid Format** This response code indicates that the requested action will not be taken because the length of the received request message is incorrect
22h	**Conditions Not Correct** This response code indicates that the requested action will not be taken, because conditions are not correct or a time-out has appeared.
24h	**RequestSequenceError** This response code indicates that the requested action will not be taken because the server expects a different sequence of request messages or message to that sent by the client. This may occur when sequence-sensitive requests are issued in the wrong order.
31h	**Request Out Of Range** This response code indicates that the requested action will not be taken because the request has incorrect parameters
78h	**Request Correctly Received – Response Pending** This response code indicates, that the request message was received correctly and that all parameters in the request message are valid, but the request cannot be completed within P2_CAN_ECU_max. (e.g. Access of EEPROM data)
7Fh	**Service Not Supported in Active Session** This response code indicates that the requested action will not be taken because the ECU does not support the requested service in the current session.

© This document is the exclusive property of Robert Bosch GmbH. Without their consent it may not be reproduced or given to third parties.
If printed this is a uncontrolled document. The user must verify it is an authorized edition prior to use.

3.3.12. Service $85 - ControlDTCSetting

3.3.12.1. Description

The ControlDTCSetting service is used by a diagnostic tool to stop or resume the setting of diagnostic trouble codes (DTC) in the ECU.

The ECU is enabling the storage of DTCs when switching the ECU to default session (by Service Start Default Diagnostic Session, ECUReset or P3-Timeout).

3.3.12.2. Availability

Supported Diagnostic Sessions		defaultSession
	X	extendedDiagnosticSession
Supported Addressing Modes	**X**	physical
	X	functional

3.3.12.3. Request Message

Byte	Bit	Description	Value + Unit	LSB	Offset
1		Request Service Id = [Control DTC Setting]	$85		
2	0..6	Sub Function = [DTC Setting Type]	$01 = on $02 = off		
	7	Suppress Positive Response Bit	0 = ECU is sending a positive response 1 = ECU is not sending a positive response		

3.3.12.4. Response Message

Byte	Bit	Description	Value + Unit	LSB	Offset
1		Response Service Id = [Control DTC Setting]	$C5		
2		Sub Function = [DTC Setting Type]	$xx		

3.3.12.5. Negative Response Codes

Value	Description
$12	Sub function not supported
$13	Incorrect Message Length

© This document is the exclusive property of Robert Bosch GmbH. Without their consent it may not be reproduced or given to third parties.
If printed this is a uncontrolled document. The user must verify it is an authorized edition prior to use.

3.4. Application: End-Of-Line Routines

Note that the actual description of the end-of-line testing, evacuation/filling and repair bleeding sequences are described in separate documents, provided by CC/ESU1.

3.4.1. Actuator Table

The following table lists the available actuator identifiers for service $31. In particular, they are relevant for the dynamic test.

Actuator – ID	Channel	Actuator – Value
$0000	No activation	
$0022	Pump-Motor (RFP)	[$0064] = on [$0000] = off
$0030	EV front left (EVVL) (Inlet Valve FL)	[$0064] = on [$0000] = off
$0032	AV front left (AVVL) (Outlet Valve FL)	[$0064] = on [$0000] = off
$0034	EV front right (EVVR) (Inlet Valve FR)	[$0064] = on [$0000] = off
$0036	AV front right (AVVR) (Outlet Valve FR)	[$0064] = on [$0000] = off
$0038	EV rear right (EVHR) (Inlet Valve RR)	[$0064] = on [$0000] = off
$003A	AV rear right (AVHR) (Outlet Valve RR)	[$0064] = on [$0000] = off
$003C	EV rear left (EVHL) (Inlet Valve RL)	[$0064] = on [$0000] = off
$003E	AV rear left (AVHL) (Outlet Valve RL)	[$0064] = on [$0000] = off
$004E	Control Valve USV 1	[$0064] = on [$0000] = off
$0050	Control Valve USV 2	[$0064] = on [$0000] = off
$0052	High Pressure Control Valve (HSV) 1	[$0064] = on [$0000] = off
$0054	High Pressure Control Valve (HSV) 2	[$0064] = on [$0000] = off
$0062	Disable / Enable Overheat Protection	[$00A5] = Disable [$0000] = Enable
$0064	Disable / Enable (Value Relais) VR-Shut down	[$00AB] = Disable [$0000] = Enable

3.4.2. Actuation Limitations

Valves and pump motor are covered by protection measures to avoid destruction due to excessive actuation. In case the protection measures are triggered, a fault entry is stored in the fault memory to document the overheat situation.

© This document is the exclusive property of Robert Bosch GmbH. Without their consent it may not be reproduced or given to third parties.
If printed this is a uncontrolled document. The user must verify it is an authorized edition prior to use.

Protections measures can be disabled by usage of actuator 0062. Actuation of valves or pump with disabled protection measures may damage the brake system due to excess temperature or excess pressure conditions.Valves and pump motor are covered by protection measures to avoid destruction due to excessive actuation. In case the protection measures are triggered, a fault entry is stored in the fault memory to document the overheat situation.

Too short actuations of the pump motor shall be avoided. The minimum allowed control duration for the actuator “Pump Motor” is 20ms.

3.5. Application: Fault Memory

3.5.1. Diagnostic Trouble Codes

The DTC coding information is according to the format ISO14229-1DTCFormat, meaning there is no standardized decoding defined - instead the DTCs are defined as specified by the vehicle manufacturer.

The DTC code consists of 3 bytes. Middle and lower byte are used to determine the affected part of the system, the high byte is always considered to be 0x00.

DTC Code (High Byte)	DTC Code (Middle Byte)	DTC Code (Low Byte = DTC Failure Type Byte)
Two byte hexadecimal number indicating the affected part of the system. DTC Failure Type Byte, containing DTC Failure Category and DTC Failure Subtype.		

The following table describes the middle and low byte of the DTC Code. The values have been chosen for the Chassis Group between $4xxx and $7xxx.

DTC Code (Middle Byte, Low Byte)	Description
$4020	Return Pump
$4031	Wheel Speed Sensor Front Left
$4032	Wheel Speed Sensor Front Left Magnetic
$4034	Wheel Speed Sensor Front Right
$4035	Wheel Speed Sensor Front Right Magnetic
$4037	Wheel Speed Sensor Rear Left
$4038	Wheel Speed Sensor Rear Left Magnetic
$403A	Wheel Speed Sensor Rear Right
$403B	Wheel Speed Sensor Rear Right Magnetic
$5000	Generic Wheel Speed Sensor
$4040	Brake Light Switch
$4051[1]	Steering Wheel Angle Sensor
$4063[1]	Yaw Rate Sensor
$5100	Electronic Control Unit
$5110	Valve Relay
$5130	Power Supply
$5200	Generic Can
$6000	Overheat of Valves

[1] these DTCs are not supported with ABS

© This document is the exclusive property of Robert Bosch GmbH. Without their consent it may not be reproduced or given to third parties.
If printed this is a uncontrolled document. The user must verify it is an authorized edition prior to use.