INDEX	
PAGE TITLE	PAGE
TITLE BLOCK	1
REVISION BLOCK	2
PART BLOCK	3
KPC BLOCK	4
DATUM BLOCK	5
GD&T	6
NOTES	7
PINOUTS	8
DETAILS	9
CONNECTION SYSTEM MATING INSTRUCTIONS	10
LABEL-ID, FORMAT	11

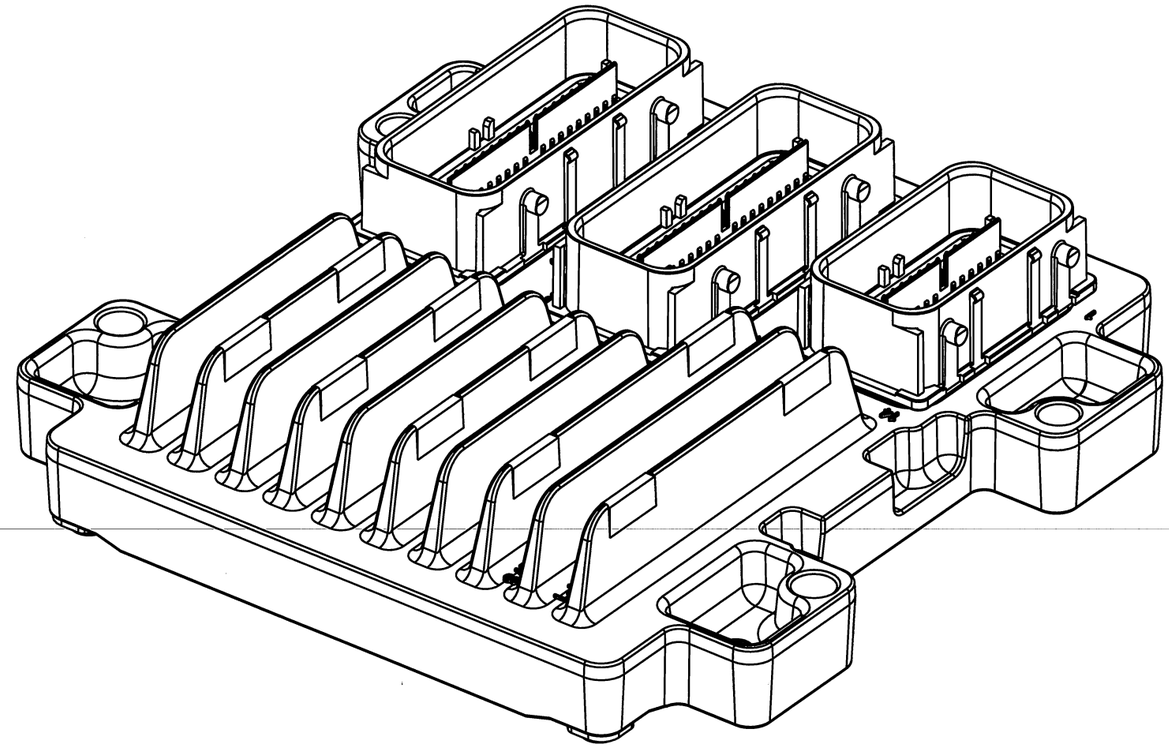

SCALE 1/1

E78 MY16 SYSTEM 2 ECM - GEN 2, 6 AND 8 CYLINDER

APPROXIMATE OVERALL DIMENSIONS:

LENGTH: 160.0
WIDTH: 159.0
HEIGHT: 40.3

GM

THIS DOCUMENT IS IN ACCORDANCE WITH ASME Y14.5M-1994 AS AMENDED BY THE GM GLOBAL DIMENSIONING AND TOLERANCING ADDENDUM - 2004.

UG

CHANGE RESTRICTED
NO MANUAL CHANGES

DO NOT SCALE

METRIC

DIMENSIONS SHOWN IN MILLIMETERS UNLESS OTHERWISE SPECIFIED

REFERENCE
2016 E78
12F

		DATE
DRAFTER	DEREK DELRYMPLE	11FE14
APVD1	M.R. OOSTERINK	30AP14
APVD2	J. SWARTZ	30AP14
APVD3	M. SIDRAK	16MY14
APVD4		
APVD5		

DRAWING NAME
MODULE ASM-ENG CONT

DRAWING NUMBER
12662834

DWG STATUS			PAGE NUMBER
ST	REV	PDI	
R	001		1 OF 11

PAGE	DWG STATUS					REVISION HISTORY	AUTH	DR	CK	ENG
	DATE	ST	REV	CHG	PDI					
	16MY14	R	001	A		RELEASED TO PRODUCTION AT DLS A	GXPFH	DAD	MRO	MS

	GM	PAGE TITLE REVISION BLOCK		DRAWING NUMBER 12662834	DWG STATUS ST: R REV: 001 PDI:		PAGE NUMBER 2 OF 11

HIERARCHY /QUANTITY	DWG ITM	DWG RLTN SHIP	PART NUMBER	P-A ITM	DLS	ST	REV	PDI	NMCI	MASS (KG)	PART NAME	NOTES
	01	RD	12662834		A	2	001			0.68	MOD ASM-ENG CONT	
											DRAWING	

PARTS SHOWN ON DRAWING

GM	PAGE TITLE PART BLOCK		DRAWING NUMBER 12662834	DWG STATUS ST: R REV: 001 PDI:	PAGE NUMBER 3 OF 11	

KEY PRODUCT CHARACTERISTICS
(IN ACCORDANCE WITH QN 1805 OR QN 1050)

▽ SAFETY/COMPLIANCE

◇ FIT/FUNCTION

TOTAL ON DRAWING	16
LAST NO. USED	16

NO	TYPE	DESCRIPTION	RATIONALE	PAGE/ZONE
1	S/C	INJECTOR PULSE WIDTH ACCURACY	SYSTEM EMISSIONS	4
2	S/C	FUEL INJECTOR START OF INJECTION ACCURACY	SYSTEM EMISSIONS	4
3	F/F	MASS AIR FLOW ACCURACY TO SOFTWARE	SYSTEM EMISSIONS	4
4	S/C	THROTTLE POSITION SENSOR ACCURACY TO SOFTWARE	SYSTEM EMISSIONS	4
5	S/C	THROTTLE POSITION SENSOR #2 ACCURACY TO SOFTWARE	SYSTEM EMISSIONS	4
6	S/C	PEDAL POSITION SENSOR #1 ACCURACY TO SOFTWARE	SYSTEM PERFORMANCE	4
7	S/C	PEDAL POSITION SENSOR #2 ACCURACY TO SOFTWARE	SYSTEM PERFORMANCE	4
8	S/C	MANIFOLD AIR PRESSURE A/D INPUT CONVERSION ACCURACY	SYSTEM EMISSIONS	4
9	S/C	EXHAUST OXYGEN SENSOR; A/D INPUT CONVERSION ACCURACY	SYSTEM EMISSIONS	4
10	S/C	EOS CORRELATION (MULTIPLE SENSOR) CONVERSION ACCURACY CORRELATION	SYSTEM EMISSIONS	4
11	S/C	CONTROLLER A/D REFERENCE VOLTAGE CORRELATION ACCURACY TO THE CONTROLLER 5.0 VOLT SENSOR POWER OUTPUT (V5BX)	SYSTEM PERFORMANCE	4
12	F/F	STANDBY CURRENT PARASITIC LOAD	SYSTEM PERFORMANCE	4
13	F/F	EXTERNAL COVER BAR CODE LABEL READABILITY	SYSTEM PERFORMANCE	4
*14	F/F	CAM POSTS	CONNECTION SYSTEM	9
*15	F/F	SLIDE RELEASE BUMPS	CONNECTION SYSTEM	9
*16	F/F	ANTI-ROCK PADS	CONNECTION SYSTEM	9

* HEADER SUPPLIER SHALL BE RESPONSIBLE FOR COLLECTION OF KPC DATA

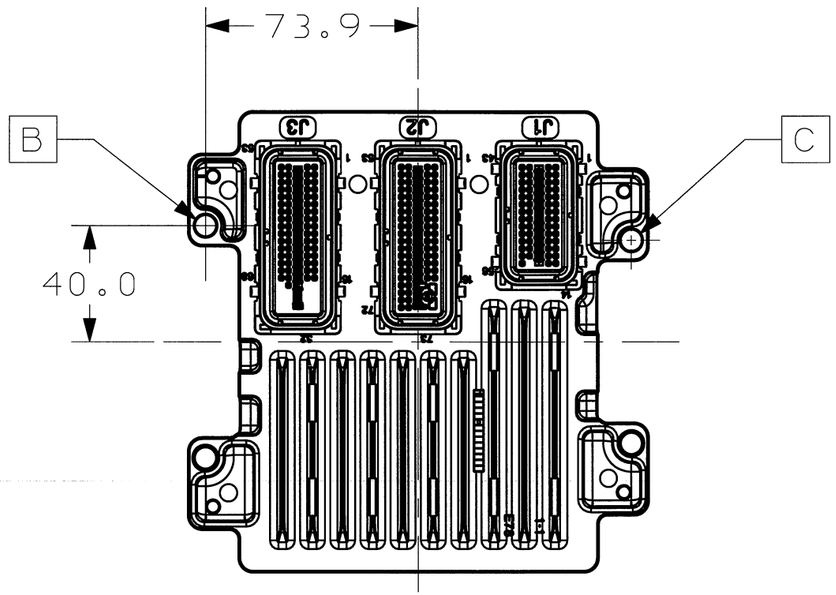

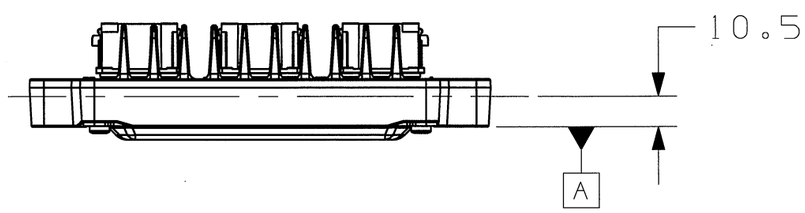

DATUMS			
PAGE	DATUM	DESCRIPTION	DIRECTION
5	A	MATING CONSIST OF DATUM A	UP/DOWN
5	B	MATING CONSIST OF MOUNTING HOLE	FORE/AFT CROSS CAR
5	C	MATING CONSIST OF MOUNTING HOLE	FORE/AFT CROSS CAR

FOR REFERENCE PURPOSES ONLY.
APPROXIMATE CENTER
OF GRAVITY LOCATION:

X= 73.9
Y= 40.0
Z= 10.5

GM	PAGE TITLE	DRAWING NUMBER	DWG STATUS			PAGE NUMBER
			ST	REV	PDI	
	DATUM BLOCK	12662834	R	001		5 OF 11

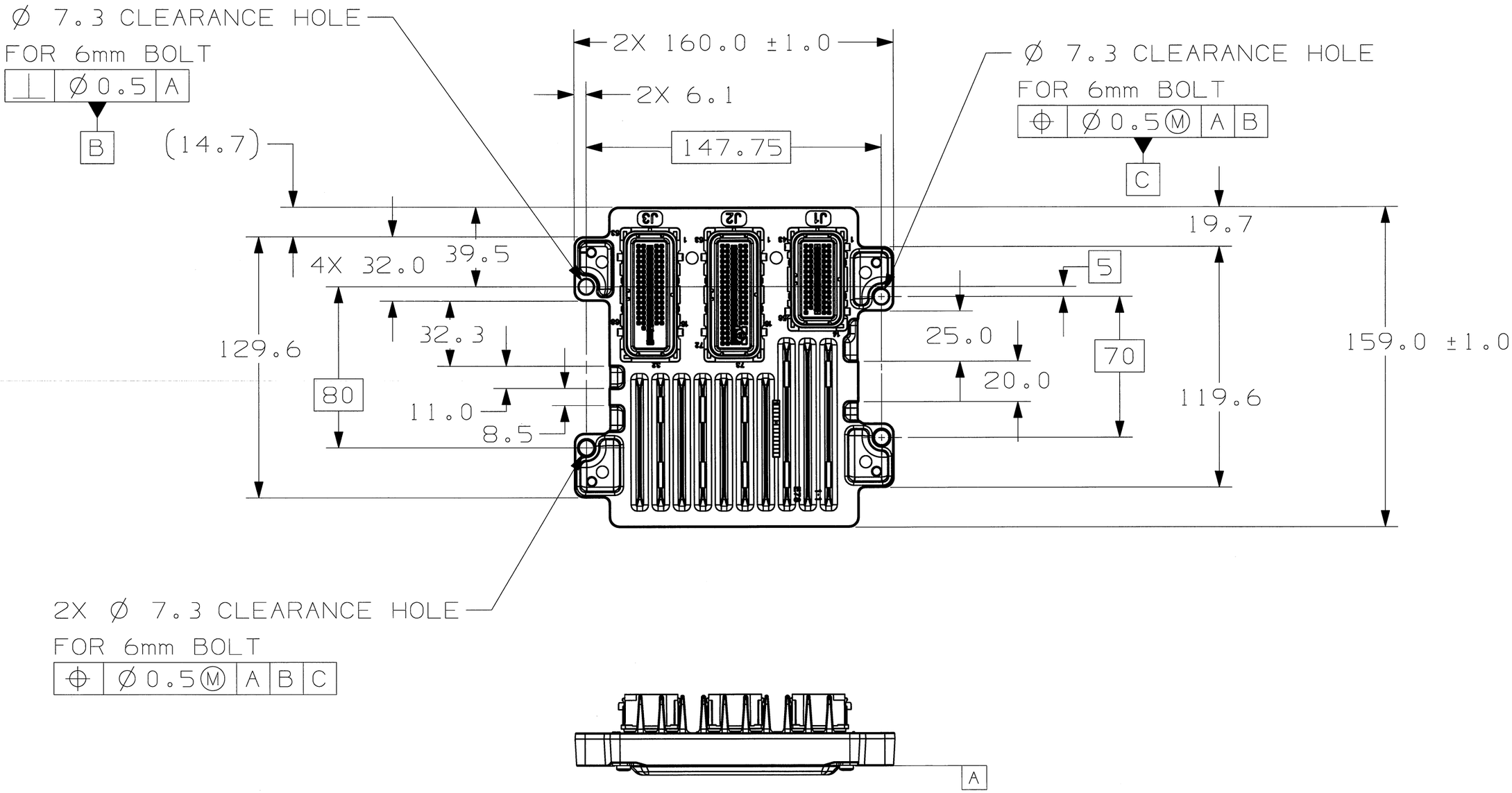

	GM	PAGE TITLE GD&T		DRAWING NUMBER 12662834	DWG STATUS ST: R	REV: 001	PDI:	PAGE NUMBER 6 OF 11

NOTES:

1. APPROXIMATE MASS: 0.68 Kg.

2. RESTRICTED AND REPORTABLE CHEMICALS PER GMW3059.

3. PARTS AS DELIVERED TO ASSEMBLY PLANTS SHALL BE CLEAN AND FREE OF DEBRIS, RESIDUAL ABRASIVE MATERIAL, AND CORROSIVE PRODUCTS ADVERSELY AFFECTING FUNCTION OR APPEARANCE.

4. REFERENCE GM PART NUMBER 12582682 AND 12582683 FOR CONNECTOR DETAILS AND APPLICABLE KPC DIMENSIONS.

VIEWS AND SECTIONS ON THIS DRAWING ARE IN ACCORDANCE WITH GM DCS SECTION C3

WHERE DIMENSIONS ARE SPECIFIED ON THE DRAWING, THE DRAWING IS THE AUTHORITY FOR DIMENSIONAL VALUES.

WHERE DIMENSIONS ARE NOT SPECIFIED ON THE DRAWING, THE DIGITAL MODEL IS THE AUTHORITY FOR DIMENSIONAL VALUES.

DIMENSIONS OBTAINED FROM THE DIGITAL MODEL ARE BASIC:

1. FOR RELATIONSHIPS BETWEEN FEATURES WHEN ESTABLISHED BY GEOMETRIC TOLERANCES.
2. FOR THE FORM OF A FEATURE WHEN CONTROLLED BY A PROFILE TOLERANCE.
3. FOR THE SIZE, FORM AND/OR RELATIONSHIP BETWEEN FIXED DATUM TARGETS.

DIMENSIONS OBTAINED FROM THE DIGITAL MODEL ARE ROUNDED TO TWO DECIMAL PLACES (PER IEEE/ASTM SI 10-2002)

THE DIGITAL MODEL MUST CORRESPOND TO THE RELEASE LEVEL SHOWN IN THE PART BLOCK ON THIS DOCUMENT.

UNLESS OTHERWISE SPECIFIED:
1 PLACE DECIMALS ± 1.0
2 PLACE DECIMALS ± 0.50
ANGLES ± 1°30'

CONNECTOR J1 PINOUT

PIN NO.	DESCRIPTION	PIN NO.	DESCRIPTION
J1-1	CAN2HI	J1-29	CANHI_T
J1-2	PPP3S2	J1-30	RTN_PP2
J1-3	HSMAF	J1-31	RTN_IAT:RTN_INAIR
J1-4	4WDL	J1-32	RTN_ERT
J1-5	4WDM:RAXLO	J1-33	BRAKEPA
J1-6	CLSW	J1-34	NEUTSSW3
J1-7	FANSPD	J1-35	RTN_FANS
J1-8	HUMIDS	J1-36	RTN_LEG:RTN_EMSW
J1-9	AAP2	J1-37	RTN_AAP2:RTN_OATS
J1-10	PPS1	J1-38	RTN_PP1
J1-11	AAP	J1-39	RTN_AAP
J1-12	ACPRESS	J1-40	PTRELAY
J1-13	RTN_ACP	J1-41	FAN1
J1-14	FUELP2	J1-42	NO CONNECT
J1-15	CAN2LO	J1-43	CANLO_T
J1-16	V5BC_PP2	J1-44	INAIR
J1-17	V5BA_INAIR	J1-45	IAT
J1-18	ACCESS	J1-46	ERT
J1-19	IGN	J1-47	GENLTRM
J1-20	V_BATT	J1-48	REPCRNK
J1-21	V5BB_FANS	J1-49	REPCAM
J1-22	V5BB_LEG:V5BB_EMSW	J1-50	RWHSP
J1-23	V5BB_AAP2	J1-51	AIRSOL
J1-24	V5BD_PP1	J1-52	MIL
J1-25	V5BA_AAP	J1-53	ACCC
J1-26	V5BA_ACP	J1-54	FAN2
J1-27	STCNTL2	J1-55	AIRPUMP
J1-28	FUELP	J1-56	CVS

CONNECTOR J2 PINOUT

PIN NO.	DESCRIPTION	PIN NO.	DESCRIPTION	PIN NO.	DESCRIPTION
J2-1	ESTA	J2-29	CAMPHLOW	J2-57	CAMX
J2-2	INJA	J2-30	CAMPHLOX	J2-58	CAMY
J2-3	INJB	J2-31	OILPRSW	J2-59	CAMZ
J2-4	INJC	J2-32	CAMPHCZ:LEGR	J2-60	CAMW
J2-5	INJD	J2-33	ESTC	J2-61	EOP
J2-6	INJE	J2-34	ESTF	J2-62	FTVP2
J2-7	INJF	J2-35	ESTRTN	J2-63	TPS1
J2-8	INJG	J2-36	V5BB_60X	J2-64	LEGRPOS:EMSW
J2-9	INJH	J2-37	V5BA_CAMX	J2-65	TPS2
J2-10	CAMPHCX	J2-38	V5BA_CAMY	J2-66	EOT:HOODSTSW
J2-11	CAMPHCW	J2-39	V5BA_CAMZ	J2-67	O2AH1
J2-12	CAMPHCY	J2-40	V5BA_CAMW	J2-68	O2BH1
J2-13	PTIGN2	J2-41	V5BA_EOP	J2-69	KNSA_DAQ
J2-14	THMSTC	J2-42	V5BA_NGS	J2-70	KNSA2_DAQ
J2-15	ETCM_OP	J2-43	V5BD_TPSS	J2-71	CAMPHLOY
J2-16	ETCM_CL	J2-44	RTN_TPSS	J2-72	O2AHT
J2-17	ESTB	J2-45	TPS1_2	J2-73	PWRGND
J2-18	ESTG	J2-46	IAT2:OATS		
J2-19	ESTRTN2	J2-47	O2ALO		
J2-20	RTN_60X	J2-48	O2BLO		
J2-21	RTN_CAMX	J2-49	KNSA_RTN		
J2-22	RTN_CAMY	J2-50	KNSA2_RTN		
J2-23	RTN_CAMZ	J2-51	CAMPHLOZ		
J2-24	RTN_CAMW	J2-52	O2BHT		
J2-25	RTN_EOP	J2-53	ESTD		
J2-26	RTN_NGS	J2-54	ESTE		
J2-27	RTN_EOT	J2-55	ESTH		
J2-28	PTIGN	J2-56	CRANK60X		

CONNECTOR J3 PINOUT

PIN NO.	DESCRIPTION	PIN NO.	DESCRIPTION	PIN NO.	DESCRIPTION
J3-1	REVGRSW	J3-29	RTN_MAP	J3-57	AIRPPS
J3-2	PTOENGK	J3-30	RTN_ECT	J3-58	BPP:CPP
J3-3	CYLDA:TBD:ELCMPMM	J3-31	RTN_TOT	J3-59	BRKBVAC:ELCMPS
J3-4	CYLDC:ELCMSV	J3-32	O2CHT	J3-60	SPANA
J3-5	CYLDB:TBD:DCV	J3-33	CMCVPS	J3-61	SPAN2
J3-6	CYLDD:MAFEN	J3-34	FCS	J3-62	FRAILP
J3-7	BCCNTRL	J3-35	V5BB_TOSS	J3-63	FTVP
J3-8	HLPRELAY	J3-36	V5BB_APS2	J3-64	FLS
J3-9	CMCV	J3-37	V5BB_APS	J3-65	O2DH1
J3-10	CCP	J3-38	V5BB_BPP:V5BB_CPP	J3-66	O2DLO
J3-11	SKIPSHIFT	J3-39	V5BB_BRV:V5BB_ELCMPS	J3-67	O2CH1
J3-12	IMTV	J3-40	V5BA_ANA	J3-68	O2CLO
J3-13	BBCNTRL	J3-41	V5BA_AN2	J3-69	NO CONNECT
J3-14	SHFTLCK	J3-42	V5BA_FUELP	J3-70	NO CONNECT
J3-15	BPCNTRL	J3-43	V5BA_FT	J3-71	NO CONNECT
J3-16	O2DHT	J3-44	FLS2	J3-72	NO CONNECT
J3-17	GENFTRM	J3-45	MAP	J3-73	NO CONNECT
J3-18	OILCOND:OILLEVLO	J3-46	ECT		
J3-19	RTN_TOSS	J3-47	TROILT		
J3-20	RTN_APS2	J3-48	TOSSHI		
J3-21	RTN_APS	J3-49	TOSSLO		
J3-22	RTN_BPP:RTN_CPP	J3-50	NO CONNECT		
J3-23	RTN_BRV:RTN_ELCMPS	J3-51	NO CONNECT		
J3-24	RTN_ANA	J3-52	NO CONNECT		
J3-25	RTN_AN2	J3-53	IMTVPS		
J3-26	RTN_FUELP	J3-54	IMTVPS2:CMCVPS2:NGS		
J3-27	RTN_FT	J3-55	TOSSHI:RTOSIN		
J3-28	V5BC_MAP	J3-56	AIRPPS2		

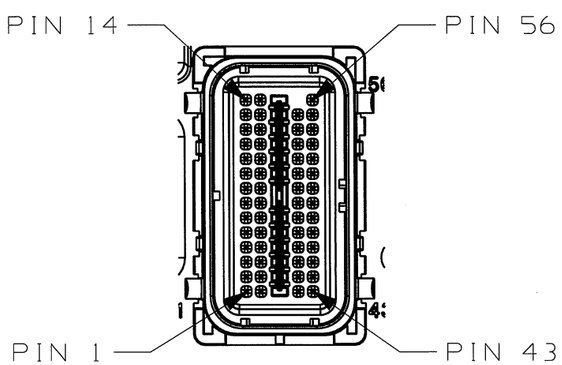

CONNECTOR J1
SCALE 1/1

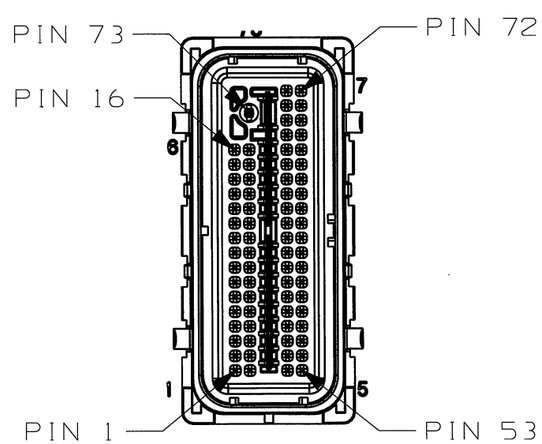

CONNECTOR J2
SCALE 1/1

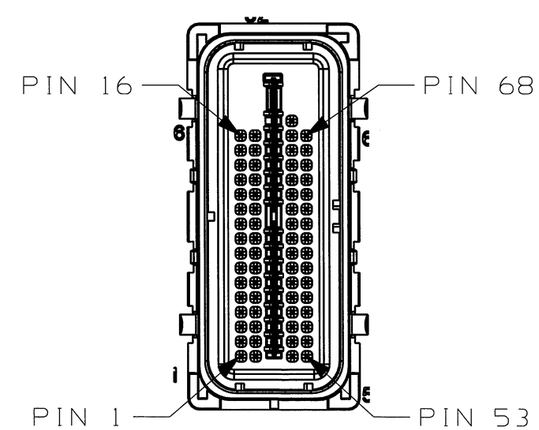

CONNECTOR J3
SCALE 1/1

GM	PAGE TITLE PINOUTS		DRAWING NUMBER 12662834	DWG STATUS ST: R REV: 001 PDI:	PAGE NUMBER 8 OF 11	

J3 MATING HARNESS CONNECTOR
COLOR CODE: GREY
12582678 73 WAY ASM, KEY B
12582676 WIRE DRESS COVER
12582686 GT280 SEAL
12582684 0.64 TERMINAL 18/20 GA.
OR EQUIVALENT*

J2 MATING HARNESS CONNECTOR
COLOR CODE: BLACK
12582677 73 WAY ASM, KEY A
12582676 WIRE DRESS COVER
12582686 GT280 SEAL
12582684 0.64 TERMINAL 18/20 GA.
12582685 2.8mm TERMINAL 14 GA.
OR EQUIVALENT*

J1 MATING HARNESS CONNECTOR
COLOR CODE: BLUE
12582680 56 WAY ASM, KEY G
12582679 WIRE DRESS COVER
12582684 0.64 TERMINAL 18/20 GA.
OR EQUIVALENT*

*PART NUMBERS FOR
REFERENCE PURPOSES ONLY.

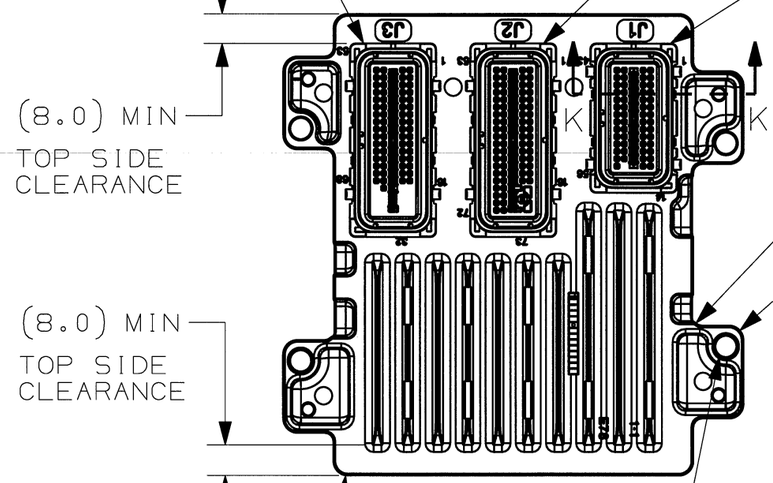

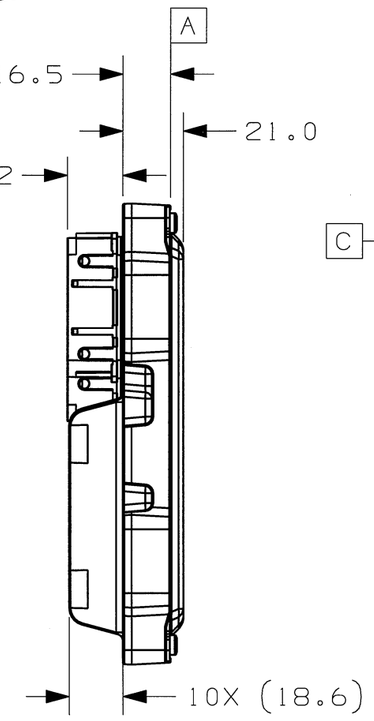

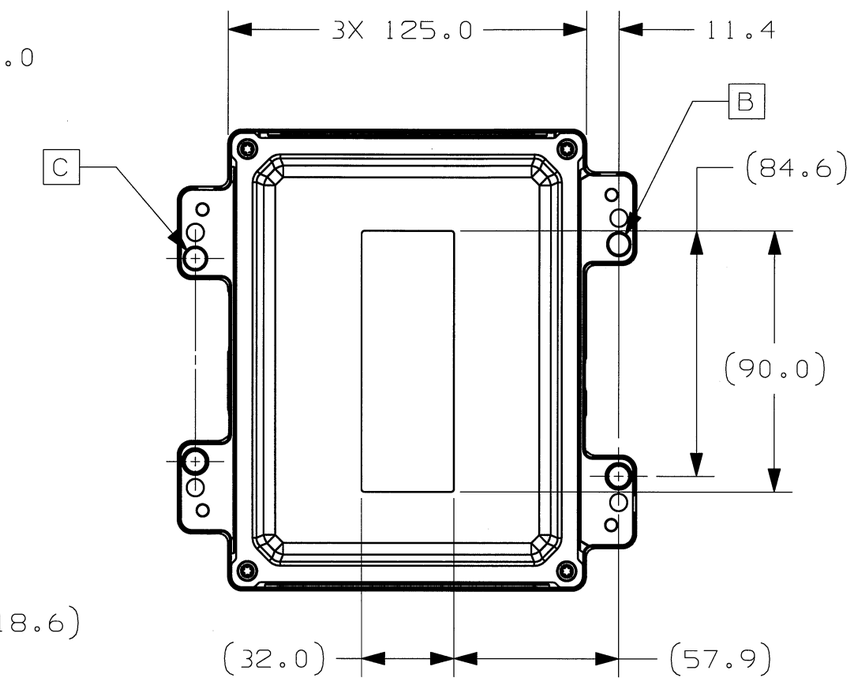

11.0 TOP SIDE RADIAL CLEARANCE
AND 13.5 BOTTOM SIDE
RADIAL CLEARANCE 4 PLACES.

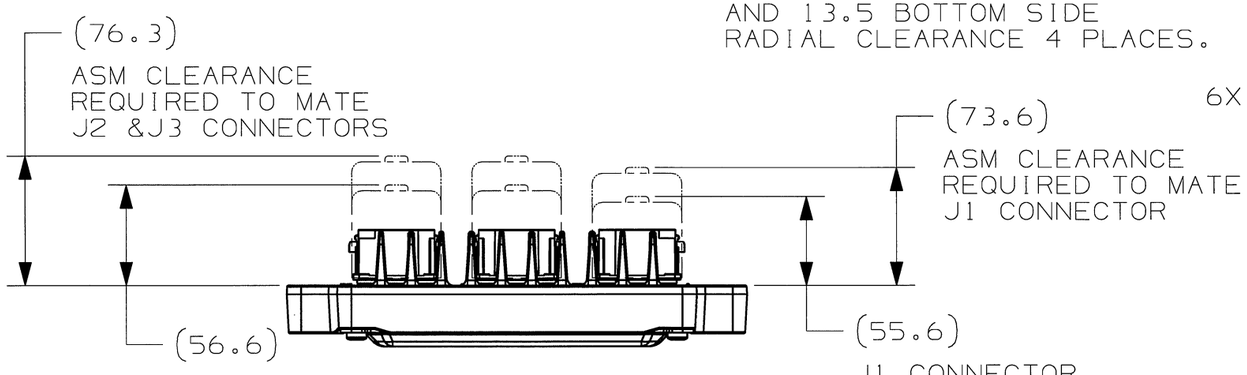

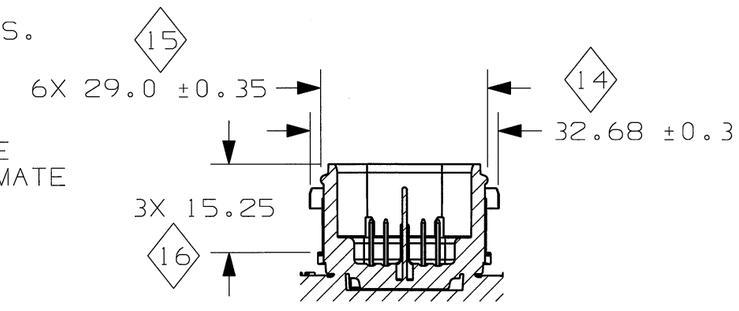

SECTION K-K
SCALE 1/1

GM	PAGE TITLE DETAILS		DRAWING NUMBER 12662834	DWG STATUS ST: R	REV: 001	PDI:	PAGE NUMBER 9 OF 11

CONNECTION SYSTEM MATING INSTRUCTIONS:

1. IF THE SPECIFIC APPLICATION ALLOWS, FIRST ASSEMBLE CONTROLLER TO VEHICLE MOUNTING BRACKET OR PLACE CONTROLLER IN MOUNTING POSITION BEFORE MATING ANY CONNECTORS.

2. CHECK HARNESSES TO ENSURE THE SLIDE ASSIST LEVER IS IN FRONT MOST (FULLY OPEN) POSITION ON THE CONNECTOR AND THAT THE HARNESS CONNECTORS DO NOT EXHIBIT ANY VISIBLE DAMAGE. THE ABILITY TO ASSEMBLE THE HARNESS AND HEADER CONNECTOR IS EASIER WHEN HARNESS WIRES ARE NOT CONSTRAINED. PRIOR TO MATING, WIRE HARNESS BUNDLE MUST BE FREE OF ANY CONSTRAINTS, FOR A MIN OF 100mm AS MEASURED ALONG WIRE BUNDLE AND FROM BACK OF CONNECTOR SHROUD.

3. EACH HARNESS CONNECTOR SHOULD BE ASSEMBLED, PER THE TDA COLOR CODING, TO THE CORRECT HEADER CONNECTOR BAY. THE HARNESS-TO-HEADER BAY CONNECTION ORDER SHOULD BE DETERMINED BY THE EASE OF HARNESS ACCESS. THE SLIDE ASSIST LEVER MUST REMAIN IN THE FRONT MOST (FULLY OPEN) POSITION ON THE CONNECTOR UNTIL THE HARNESS IS SEATED ON THE HEADER CONNECTOR BAY.

4. CORRECTLY ORIENT HARNESS CONNECTOR USING ALIGNMENT FEATURES. PUSH CONNECTOR IN A STRAIGHT MOTION ONTO HEADER BAY UNTIL CONNECTOR HOUSING HAS SNAPPED OVER THE LOCK FEATURES, USER WILL HEAR AN AUDIBLE CLICK. A PRE-STAGED CONNECTOR WILL BE PARALLEL TO THE CONTROLLER CASE, AND THE LEVER WILL MOVE INTO "PRE-STAGE" POSITION TOWARDS HARNESS BUNDLE. INITIATE THE SLIDE ASSIST LEVER TO COMPLETE HARNESS TO HEADER ENGAGEMENT.

   IF THE SLIDE ASSIST LEVER WILL NOT ROTATE DURING THE MATING ACTION, DO NOT FORCE THE CONNECTION, INSTEAD:
   REMOVE THE CONNECTOR
   1. MOVE THE SLIDE ASSIST LEVER TO THE FRONT MOST (FULLY OPEN) POSITION.
   2. RESEAT THE CONNECTOR ONTO THE HEADER BAY REPEATING THE ACTUATION OF THE LEVER.

5. TO ENSURE THE LEVER/CONNECTOR IS FULLY SEATED:

   1. PUSH CPA INTO FINAL SEAT POSITION.
   2. THE LEVER WILL BE BEHIND THE SNAP FEATURE LOCATED ON TOP OF THE WIRE DRESS COVER, AND CPA BACK SURFACE SHOULD BE FLUSH WITH TOP OF LEVER POCKET.
   3. CONNECTOR SHOULD BE PARALLEL TO CONTROLLER CASE TOP SURFACE.

6. REPEAT FOR ALL HARNESS POSITIONS.

7. SECURE HARNESS WIRES AS INTENDED IN VEHICLE NEAR THE CONTROLLER. (WITHIN 100mm ON-ENGINE, WITHIN 300mm OFF-ENGINE).

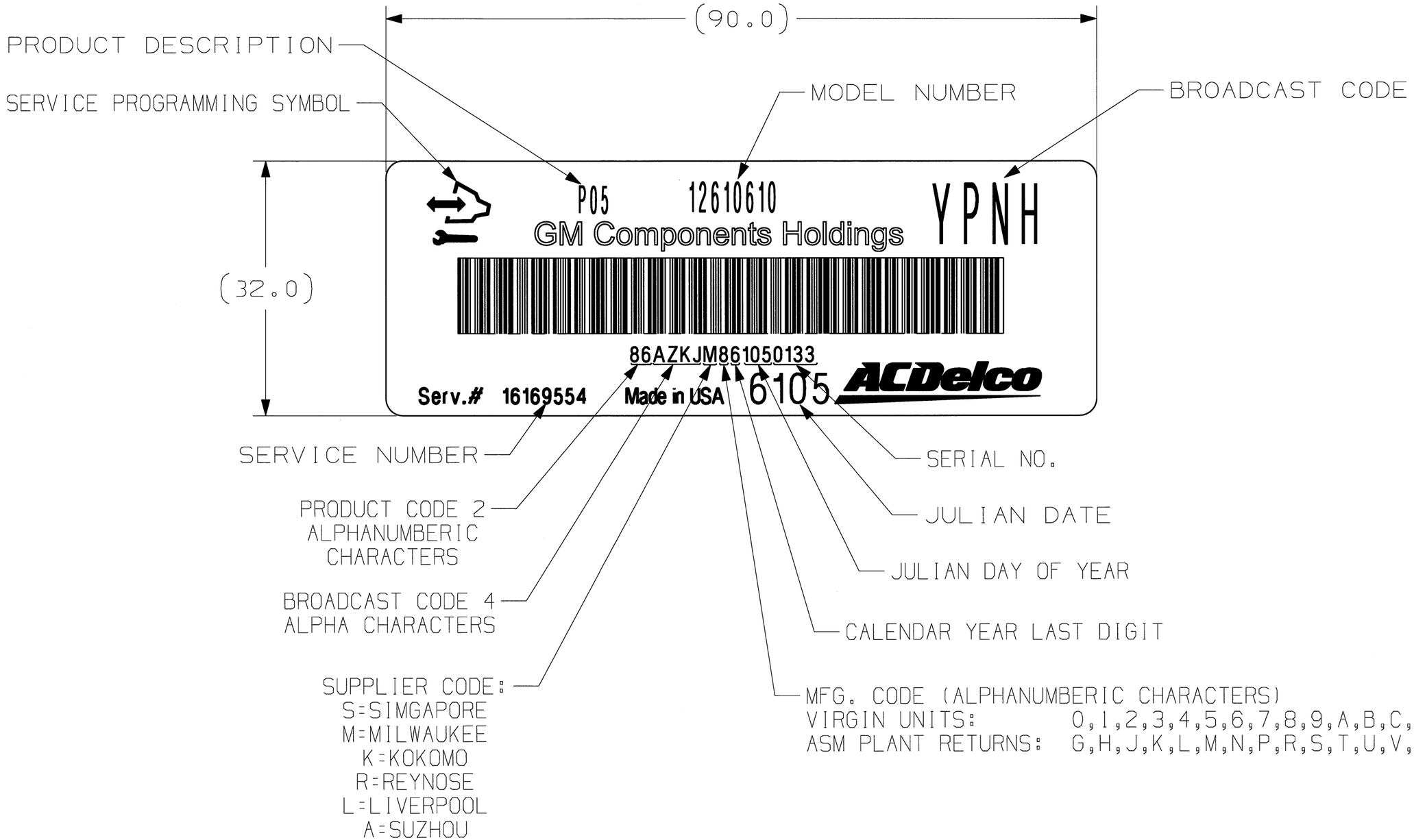

ALL LABEL INFORMATION ON THIS PAGE
IS FOR CUSTOMER REFERENCE PURPOSES ONLY.

GM	PAGE TITLE LABEL-ID, FORMAT		DRAWING NUMBER 12662834	DWG STATUS ST: R	REV: 001	PDI:	PAGE NUMBER 11 OF 11