Diagnosis Functional Description

ABS/ESP-System Tesla MY14 (ESP2.0)

Protocol: ***UDS*** (ISO 14229-1)
Communication Bus: ***CAN***

© This document is the exclusive property of Robert Bosch GmbH. Without their consent it may not be reproduced or given to third parties.
If printed this is a uncontrolled document. The user must verify it is an authorized edition prior to use.

History

Corrections of misspelling are excluded from the following list:

Ver.	Date	Editor	Chapter	Description of changes
01	2010-07-29	L.Franzitta	New edition	--
02	2011-02-09	L.Franzitta	all	Overall update
03	2011-02-11	L.Franzitta	3.3.5	Updated DIDs to make them UDS conform
04	2011-03-03	L.Franzitta	3.1.5 3.3.9 3.3.8 3.3.5	CAN identifier for response and receive messages Removed routine for activation of EVP Included Service IOCBI for EVP activation Updated DIDs to include EVP data
05	2011-03-25	L.Franzitta	3.3.9	Corrected routine id for Actuator Test
06	2011-08-10	L.Franzitta	3.3.5	Added LID 0xFD05 for EVP data
07	2012-01-24	S. Vargas	3.1, 3.2.4, 3.3.5, 3.3.7.6, 3.3.9, 3.4.1, 3.5.1	Parameters for communication establish (section 3.1) Service 19: Monitor-ID to freeze frame data added Service 22: $F1A0 for reading VIN added Service 2E: $FD05 for writing EVP lifetime data added. Service 31: 0x0068 ID for disabling speed limit monitoring added Service 31: routines for VIN store $0404, VIN reset $F102, Roller Test Bench $F150 added. Removed routine for calibration of Ax Sensor DTC list updated
08	2012-03-01	S. Vargas	3.3.3, 3.3.7.6, 3.3.5.16, 3.5.1	Supported sessions for Service $14 updated Conditions for writing EVP coding life time added In identifier $FD02 description of state valve relay corrected DTC List updated
09	2012-04-13	S. Vargas	3.3.5.14, 3.3.5.10, 3.3.7.7 3.5.1	Service 22: $F212 for reading vehicle performance added. $F191 content changed. Service 2E: $F212 for writing vehicle performance added. DTC list updated
10	2013-12-18	N.Patel		Service $31: $F100 Ax sensor calibration

© This document is the exclusive property of Robert Bosch GmbH. Without their consent it may not be reproduced or given to third parties.
If printed this is a uncontrolled document. The user must verify it is an authorized edition prior to use.

11	2014-02-24	J.Jacob	3.3.5.14 3.3.7.7 3.3.9.6.11 3.3.9.8.8	Service $22 and $2E: $F212 Vehicle Performance Configuration - Variant table updated. Service $31: $F103 SAS Calibration routine Added
12	2014-05-07	J.Jacob	 3.3.9.8.8 3.3.5.21	Modified: Table of Contents Service $19: Subfunction $06 -Byte 25 Added: Service $31: $F100 Ax sensor Calibration-request routine result. Service $22: $FD06 Read TCS Configuration Data Identifier.
13	2014-05-16	J.Jacob	 3.3.1.7,3.3.1.8 3.3.4.8.2 3.3.5.7,3.3.5.9 3.3.5.10, 3.3.5.11. 3.3.5.14 3.3.5.18 3.3.9.6.9 3.3.9.7.2 3.3.9.8.4	Modified: Comments updated. Comments updated. Original Odometer: Range updated Most Recent Odometer: Range updated UVR, UB ECU, and UBVR: Comments updated. Controller Status: Bit positions updated. Comments updated. Variant definitions Updated. Steering Angle: Range updated Reset VIN: Comments updated. Routine Status Byte: value for incorrect routine identifier added. Wheel Speed Sensor Test: Comments updated.
14	2014-07-28	J.Jacob	 3.3.5.22 3.3.9.6.12 3.3.9.7.1 3.3.5.6 3.3.5.7 3.3.5.10 3.3.5.17 3.3.5.18 3.3.5.20 3.3.7.6 3.3.8.6.2	Updates till BL6.2 (ESP2.0 Serial Release) Added: $0101 – Read Component and Firmware Type. Routine control service - control Failsafe Reactions 0xFF05 Updated: $F180 – Boot Software Version Information data definitions changed $F181 and $F191 – Response length increased by 2 bytes. Hint provided in following services that not relevant for Tesla MY14 ESP2.0 $FD02 – Actuation State Data $FD03 – System Sensor Data $FD05 – EVP Data $FD05 – EVP Life Time. $D00D - Electrical Vacuum Pump.

© This document is the exclusive property of Robert Bosch GmbH. Without their consent it may not be reproduced or given to third parties.
If printed this is a uncontrolled document. The user must verify it is an authorized edition prior to use.

15	2014-11-06	J.Jacob		Updates for BL7.0 (ESP2.0 RC1) Added: $F196 – Read ECU Serial Number $F200 – Alert Message Activation Status Updated: $FD00-Speed Information Data Identifier: New byte info for wheel speed qualifiers added. DTC Table Updated
			3.3.5.23 3.3.5.24, 3.3.7.8 3.3.5.15 3.5.1	

© This document is the exclusive property of Robert Bosch GmbH. Without their consent it may not be reproduced or given to third parties.
If printed this is a uncontrolled document. The user must verify it is an authorized edition prior to use.

Table of Contents

1. SHORT DESCRIPTION OF DIAGNOSTIC COMMUNICATION 8

2. CONTEXT INFORMATION 9

2.1. OPERATIONAL ENVIRONMENT 9
2.2. USE CASES 9
2.3. REFERENCED DOCUMENTS 10
2.3.1. International Documents 10

3. REQUIREMENTS 11

3.1. TRANSPORT PROTOCOL: CAN 11
3.1.1. Data Stream 11
3.1.1.1. Non-Segmented Data Stream 11
3.1.1.2. Segmented Data Stream 11
3.1.2. Message Types 12
3.1.2.1. Single Frame 13
3.1.2.2. First Frame 13
3.1.2.3. Consecutive Frame 13
3.1.2.4. Flow Control 14
3.1.3. Addressing Types 14
3.1.3.1. Physical Address Type 14
3.1.3.2. Functional Address Type 15
3.1.4. CAN Communication Failures 15
3.1.4.1. Unexpected Messages 15
3.1.4.2. Missing Messages 15
3.1.5. CAN Identifier 15
3.1.6. CAN Timing Parameters 15
3.1.6.1. Performance Parameters 16
3.1.6.2. Timeout Parameters 16
3.2. COMMUNICATION MANAGER 17
3.2.1. Session Handling 17
3.2.2. Concurrent Tester Present ("Keep Alive" Logic) 17
3.2.3. Suppress Positive Response Bit 17
3.2.4. Speed Limit 17
3.3. APPLICATION: DIAGNOSTIC SERVICES 19
3.3.1. Service $10 – Diagnostic Session Control 19
3.3.1.1. Description 19
3.3.1.2. Availability 19
3.3.1.3. Request Message 20
3.3.1.4. Response Message 20
3.3.1.5. Negative Response Codes 20
3.3.1.6. Subfunction $01 – Default Session 20
3.3.1.7. Subfunction $02 – Reprogramming Session 20
3.3.1.8. Subfunction $03 – Extended Diagnostic Session 21
3.3.2. Service $11 – ECU Reset 22
3.3.2.1. Description 22
3.3.2.2. Availability 22
3.3.2.3. Request Message 22
3.3.2.4. Response Message 22
3.3.2.5. Negative Response Codes 22
3.3.3. Service $14 – Clear Diagnostic Information 23
3.3.3.1. Description 23
3.3.3.2. Availability 23
3.3.3.3. Request Message 23
3.3.3.4. Response Message 23
3.3.3.5. Negative Response Codes 23
3.3.4. Service $19 – Read DTC Information 24
3.3.4.1. Description 24
3.3.4.2. Availability 24

© This document is the exclusive property of Robert Bosch GmbH. Without their consent it may not be reproduced or given to third parties.
If printed this is a uncontrolled document. The user must verify it is an authorized edition prior to use.

3.3.4.3. Request Message ... 24
3.3.4.4. Response Message ... 24
3.3.4.5. Negative Response Codes ... 24
3.3.4.6. Subfunction $01 – Report Number Of DTC By Status Mask ... 25
3.3.4.7. Subfunction $02 – Report DTC By Status Mask ... 25
3.3.4.8. Subfunction $06 – Report DTC Extended Data Record By DTC Number ... 27
3.3.5. Service $22 – Read Data By Identifier ... 30
3.3.5.1. Description ... 30
3.3.5.2. Availability ... 30
3.3.5.3. Request Message ... 30
3.3.5.4. Response Message ... 30
3.3.5.5. Negative Response Codes ... 30
3.3.5.6. Identifier $F180 – Boot Software Version Information ... 31
3.3.5.7. Identifier $F181 – Application Software Identification Data Identifier ... 31
3.3.5.8. Identifier $F186 – Active Diagnostic Session Data Identifier ... 31
3.3.5.9. Identifier $F1A0 – VIN Data Identifier ... 32
3.3.5.10. Identifier $F191 – Vehicle Manufacturer ECU Hardware Number Data Identifier ... 32
3.3.5.11. Identifier $F193 – System Supplier ECU Hardware Version Number Data Identifier ... 32
3.3.5.12. Identifier $F194 – System Supplier ECU Software Number Data Identifier ... 33
3.3.5.13. Identifier $F195 – System Supplier ECU Software Version Number Data Identifier ... 33
3.3.5.14. Identifier $F212 – Vehicle Performance Configuration Data Identifier ... 34
3.3.5.15. Identifier $FD00 – Speed Information Data Identifier ... 34
3.3.5.16. Identifier $FD01 – Input Data Identifier ... 34
3.3.5.17. Identifier $FD02 – Actuation State Data Identifier ... 35
3.3.5.18. Identifier $FD03 – System Sensor Data Identifier ... 35
3.3.5.19. Identifier $FD04 – Controller Status Data Identifier ... 36
3.3.5.20. Identifier $FD05 – EVP Data (Not For Tesla ESP 2.0) ... 37
3.3.5.21. Identifier $FD06 – Read TCS Configuration Data Identifier ... 37
3.3.5.22. Identifier $0101 – Read Component and Firmware Type ... 37
3.3.5.23. Identifier $F196 – Read ECU Serial Number ... 38
3.3.5.24. Identifier $F200 – Alert Message Activation Status ... 38
3.3.6. Service $28 – Communication Control ... 39
3.3.6.1. Description ... 39
3.3.6.2. Availability ... 39
3.3.6.3. Request Message ... 39
3.3.6.4. Response Message ... 39
3.3.6.5. Negative Response Codes ... 39
3.3.7. Service $2E – Write Data By Identifier ... 40
3.3.7.1. Description ... 40
3.3.7.2. Availability ... 40
3.3.7.3. Request Message ... 40
3.3.7.4. Response Message ... 40
3.3.7.5. Negative Response Codes ... 40
3.3.7.6. Identifier $FD05 – EVP Life Time Coding (Not For Tesla ESP 2.0) ... 40
3.3.7.7. Identifier $F212 – Vehicle Performance Configuration ... 41
3.3.7.8. Identifier $F200 – Alert Message Activation Status ... 41
3.3.8. Service $2F – Input Output Control By Identifier ... 42
3.3.8.1. Description ... 42
3.3.8.2. Availability ... 42
3.3.8.3. Request Message ... 42
3.3.8.4. Negative Response Codes ... 42
3.3.8.5. Control Type 00h – Return Control To ECU ... 42
3.3.8.6. Control Type 03h – Short Term Adjustment ... 43
3.3.9. Service $31 – Routine Control ... 44
3.3.9.1. Description ... 44
3.3.9.2. Availability ... 44
3.3.9.3. Request Message ... 44
3.3.9.4. Response Message ... 44
3.3.9.5. Negative Response Codes ... 44
3.3.9.6. Routine Control Type $01 – Start Routine ... 45
3.3.9.7. Routine Control Type $02 – Stop Routine ... 51
3.3.9.8. Routine Control Type $03 – Request Routine Results ... 52
3.3.10. Service $3E – Tester Present ... 57
3.3.10.1. Description ... 57

© This document is the exclusive property of Robert Bosch GmbH. Without their consent it may not be reproduced or given to third parties.
If printed this is a uncontrolled document. The user must verify it is an authorized edition prior to use.

3.3.10.2. Availability ... 57
3.3.10.3. Request Message ... 57
3.3.10.4. Response Message ... 57
3.3.10.5. Negative Response Codes ... 57
3.3.11. Service $7F - Negative Response ... 58
3.3.11.1. Description ... 58
3.3.11.2. Response Message ... 58
3.3.11.3. Negative Response Codes ... 58
3.3.12. Service $85 – Control DTC Setting ... 59
3.3.12.1. Description ... 59
3.3.12.2. Availability ... 59
3.3.12.3. Request Message ... 59
3.3.12.4. Response Message ... 59
3.3.12.5. Negative Response Codes ... 59
3.4. APPLICATION: END-OF-LINE ROUTINES ... 60
3.4.1. Actuator Table ... 60
3.4.2. Actuation Limitations ... 61
3.5. APPLICATION: FAULT MEMORY ... 62
3.5.1. Diagnostic Trouble Codes ... 62

© This document is the exclusive property of Robert Bosch GmbH. Without their consent it may not be reproduced or given to third parties.
If printed this is a uncontrolled document. The user must verify it is an authorized edition prior to use.

1. Short Description of Diagnostic Communication

Diagnostic communication provides the capability of quickly accessing information and functions of the control unit via external tester tools. Diagnostic communication provides services to:

- Identify the ECU
- Read input signals of the ECU
- Read input signals
- Write output signals to the actuators
- Read ECU-internal information (e.g. contents of the fault memory)

Diagnostic communication can be used for end-of-line testing or in the servicing workshop. The testing time can be reduced substantially by using the services provided by diagnosis.

This document describes the diagnostic communication functions and specifications of the diagnostic Session. The Flash Reprogramming Session is described in a separate document.

© This document is the exclusive property of Robert Bosch GmbH. Without their consent it may not be reproduced or given to third parties.
If printed this is a uncontrolled document. The user must verify it is an authorized edition prior to use.

2. Context Information

2.1. Operational Environment

Within a vehicle, normally several ECUs exist. The ECUs share a common diagnostic bus: several ECUs are connected to this bus and an additional connector allows an external tester tool to be connected to the vehicle. This connector is known as the OBD (On Board Diagnosis) connector:

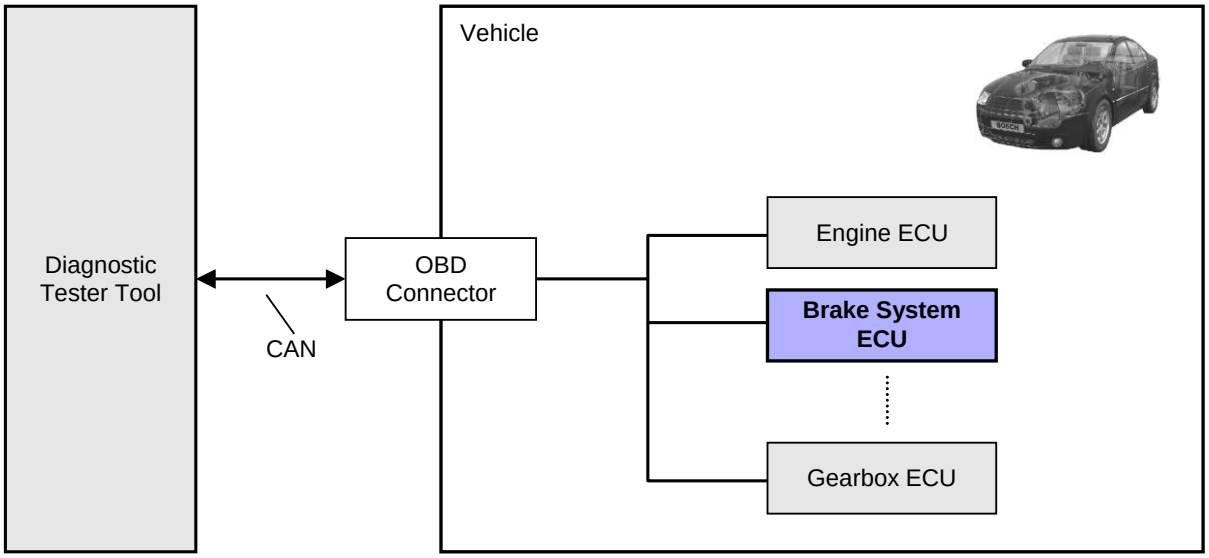

2.2. Use Cases

The Diagnostic Tester Tool can be a production facility in the vehicle production plant or a tool that is used in the repair shop. These tester tools send diagnostic requests to the ECUs in the vehicle and evaluate the responses. As the brake system ECU is also part of the vehicle, all Bosch brake system ECU's support a diagnosis communication interface to transfer information from an ECU to an off-board tester and vice-versa.

The information transferred consists of ECU fault information, signal reporting, control routines, calibration values and many other types of data used either in performing ECU diagnostics, re-programming or any other data transfer not associated with normal node to node communication.

The diagnostic communication (DCOM) part of the software is described in the following sub-chapters: its main task is to maintain correct communication between tester tools and the brake system ECU.

© This document is the exclusive property of Robert Bosch GmbH. Without their consent it may not be reproduced or given to third parties.
If printed this is a uncontrolled document. The user must verify it is an authorized edition prior to use.

2.3. Referenced Documents

2.3.1. International Documents

The general requirements of the diagnosis communication protocol are based on ISO requirements, specified in the following documents:

- ISO 14229-1: Road Vehicles - Unified Diagnostic Services (UDS)
- ISO 15765-2: Road Vehicles - Diagnostics on CAN: Network Layer Services

© This document is the exclusive property of Robert Bosch GmbH. Without their consent it may not be reproduced or given to third parties.
If printed this is a uncontrolled document. The user must verify it is an authorized edition prior to use.

3. Requirements

3.1. Transport Protocol: CAN

3.1.1. Data Stream

The ECU supports CAN diagnostic messages using the Unacknowledged Segmented Data Transfer (USDT) mechanism as specified in ISO 15765-2. Accordingly the following two types of CAN data streams are supported:

3.1.1.1. Non-Segmented Data Stream

A non-segmented data stream consists of a Single Frame (SF). Non-segmented data stream are used for messages with a maximum data length of 7 data bytes in case of normal addressing.

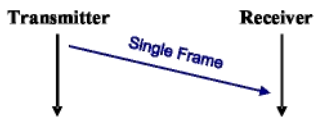

3.1.1.2. Segmented Data Stream

A segmented data stream consists of multiple frames of segmented CAN messages. A segmented data stream must be used if the maximum data length exceeds 7 data bytes in case of normal addressing.

The data stream comprises a First Frame (FF) and a number of Consecutive Frames (CF) containing the subsequent data bytes, following the First Frame. The receiver has to send a Flow Control (FC) after reception of the First Frame.

The Flow Control contains information regarding Block Size and the Separation Time. The Block Size (BS) is the maximum number of Consecutive Frames the receiver allows the sender to send, before waiting for an authorisation (Additional Flow Control Frames) from the receiver to continue transmission. The Separation Time (Stmin) is the (minimum) time the sender has to wait between transmissions of two consecutive frames.

© This document is the exclusive property of Robert Bosch GmbH. Without their consent it may not be reproduced or given to third parties.
If printed this is a uncontrolled document. The user must verify it is an authorized edition prior to use.

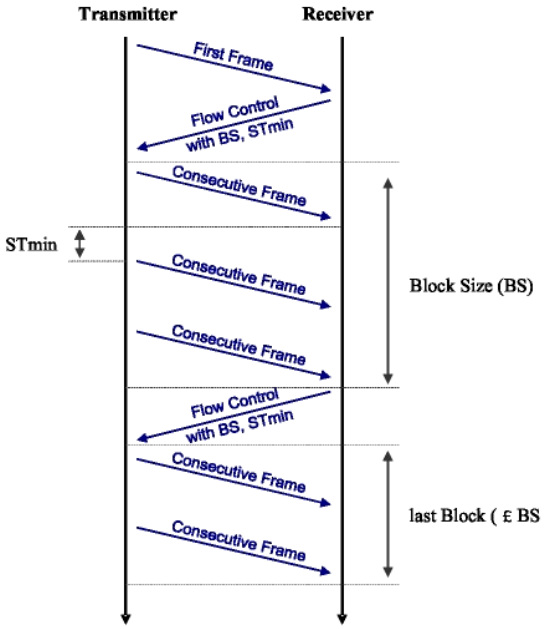

.

3.1.2. Message Types

Each Single Frame (SF), First Frame (FF), Consecutive Frame (CF) or Flow Control (FC) has an 8-byte Data Field (DLC of CAN message is set to 8) consisting of the following parts:
•Protocol Control Information (PCI)
indicates the frame type, number of frames, data length etc
•Transmission data (Data)
contains data to be sent

Data Field Structure					
Frame Type	**Byte 1**		**Byte 2**	**Byte 3**	**Byte 4 – 8**
	Bit 7- 4	**Bit 3 – 0**			
Single Frame (SF)	Type_SF = 0000B	SF_DL	DB 1	DB 2	DB 3 – 7
First Frame (FF)	Type_FF = 0001B	FF_DL		DB 1	DB 2 – 6
Consecutive Frame (CF)	Type_CF = 0010B	SN	DB x_1	DB x_2	DB x_3-x_7
Flow Control (FC)	Type_FC = 0011B	FS	BS	Stmin	N/A

SF_DL: 4 Bit Single Frame Data length
FF_DL: 12 Bit First Frame Data length
SN: Sequence Number
FS: Status of data stream
BS: Block Size
Stmin: Minimum Separation Time
DB: Data Byte

© This document is the exclusive property of Robert Bosch GmbH. Without their consent it may not be reproduced or given to third parties.
If printed this is a uncontrolled document. The user must verify it is an authorized edition prior to use.

3.1.2.1. Single Frame

A Single Frame message type is used for data messages with a maximum data length of 7 data bytes. The PCI Type 0000B identifies a Single Frame. The Single Frame data length SF_DL is defined as:

Single Frame Data Length (SF_DL):

Hex Value	Description
0h – 7h	Single Frame Data length (SF_DL) contains number of data Bytes

3.1.2.2. First Frame

Messages longer than 7 data bytes are segmented into a First Frame and one or more Consecutive Frames. The PCI Type 0001B identifies a First Frame. The First Frame data length FF_DL is defined as:

First Frame Data Length (FF_DL):

Hex Value	Description of FF_DL
000h – 007h	Reserved
008h – FFFh	First Frame Data length (FF_DL) contains number of data bytes. 12 Bit FF_DL theoretically supports sending of up to 4096 data bytes. Note: The ECU supports segmented data messages up to maximally 50 data bytes.

3.1.2.3. Consecutive Frame

Consecutive Frames are following a First Frame. The PCI Type 0010B identifies a Consecutive Frame. The Sequence Number (SN) in the lower nibble of a Consecutive Frame is specified as follows:

- The first Consecutive Frame always starts with Sequence Number 1.
- The Sequence Number is incremented by one for each additional Consecutive Frame.
- The Sequence Number (SN) value is not affected by any Flow Control (FC) frame.
- When the Sequence Number reaches the value of 15, the next Consecutive Frame will be sent with a Sequence Number set to 0.

Definition of Sequence Number (SN):

Protocol Data name	FF	CF	CF	CF	CF	CF	CF	CF	CF
SN (hex)	--	1	2	...	E	F	0	1	...

Hex Value	Description
0h – Fh	Sequence Number (SN) The Sequence Number has a range of 0 to 15. The Sequence Number is stored in the lower 4 bits of Byte 1.

© This document is the exclusive property of Robert Bosch GmbH. Without their consent it may not be reproduced or given to third parties.
If printed this is a uncontrolled document. The user must verify it is an authorized edition prior to use.

3.1.2.4. Flow Control

After the First Frame or the last Consecutive Frame of a block of frames (when further Consecutive Frames are required to complete the data transfer) the receiver must send a Flow Control (FC) frame. The PCI Type 0011B identifies a Flow Control Frame.

The flow control mechanism allows the receiver to inform the sender about the receiver's capabilities. The Flow Control contains information regarding Block Size and the Separation Time. The Block Size (BS) is the maximum number of Consecutive Frames the receiver allows the sender to send, before waiting for an authorisation (Additional Flow Control Frames) from the receiver to continue transmission. The Separation Time (Stmin) is the (minimum) time the sender has to wait between the transmissions of two consecutive frames.

Flow Status (FS):

Hex Value	Description
0h	Continue To Send (CTS) The Receiver is ready and is waiting for maximally BS Consecutive Frames

Block Size (Bsmax):

Hex Value	Description
00h	Block Size (BS) Indicates that no more Flow Control (FC) frames are allowed during transmission of the segmented data frame. All Consecutive Frames (CF) will be send without any stop for further Flow Control frames.
01h – FFh	Block Size (BS) Defines the maximal amount of Consecutive Frames (CF) that can be received without an intermediate Flow Control (FC) frame.

Separation Time (Stmin):

Hex Value	Description
00h – FFh	Separation Time (Stmin) The Separation Time defines the minimum allowed time gap (in ms) between the transmission of Consecutive Frames (CF).

3.1.3. Addressing Types

3.1.3.1. Physical Address Type

Physical addressing is used for a point-to-point communication between the diagnostic tool and the ECU (1:1 communication).

The diagnostic tool is sending a physically addressed request messages with CAN identifier CANID_REQ_PHYS to the ECU and the ECU will generally send a response message with CAN Identifier CANID_RES_PHYS

Requirements

•Physical addressing (1 to 1 communication) is supported for all types of network layer messages.

© This document is the exclusive property of Robert Bosch GmbH. Without their consent it may not be reproduced or given to third parties.
If printed this is a uncontrolled document. The user must verify it is an authorized edition prior to use.

3.1.3.2. Functional Address Type

Functional addressing is used for broadcast communication between the diagnostic tool and all connected ECUs (1:n communication).

The diagnostic tool is sending a functionally addressed request messages with CAN identifier CANID_REQ_FUNC to all ECU's and each ECU is sending a response message with the CAN Identifier CANID_RES_PHYS

Requirements

•Functional addressing (1 to n communication) is only supported for Single Frame communication. The ECU is ignoring all other Functional addressed frames (e.g. a First Frame).

3.1.4. CAN Communication Failures

3.1.4.1. Unexpected Messages

As a general rule, the arrival of an unexpected message or a message with illegal format from any node will be ignored.

3.1.4.2. Missing Messages

If the ECU is detecting a communication failure (e.g. timing violations of the Network Layer) during a diagnostic tool request, the ECU discards the request and no response will be sent.

3.1.5. CAN Identifier

Description	Name	CAN-ID
CAN Identifier for Physical addressed request messages	CANID_REQ_PHYS	**645**
CAN Identifier for response messages	CANID_RES_PHYS	**655**
CAN Identifier for Functional addressed request messages	CANID_REQ_FUNC	**7DF**

3.1.6. CAN Timing Parameters

Requirements:

•ECU timings have an accuracy error < +/- 2 ms

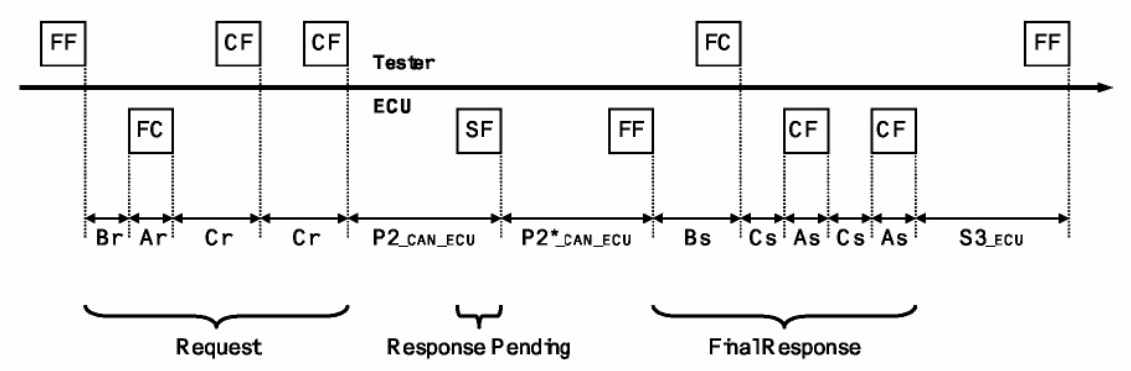

© This document is the exclusive property of Robert Bosch GmbH. Without their consent it may not be reproduced or given to third parties.
If printed this is a uncontrolled document. The user must verify it is an authorized edition prior to use.

3.1.6.1. Performance Parameters

Parameter	Description	Min Value	Max Value
P2_CAN_ECU	Performance requirement for the ECU to start with the response message after the reception of a request message	N/A	50
P2*_CAN_ECU	Performance requirement for the ECU to start with a further response message after transmission of a negative response message with negative response code 78h (Response Pending)	N/A	4000
Br	Performance requirement for the ECU to transmit a required Flow Control Frame after reception of a First Frame or Consecutive Frame from Tester	N/A	20
Cs	Performance requirement for the ECU to transmit a First Consecutive Frame after reception of a Flow Control. Performance requirement for the ECU to transmit a Next Consecutive Frame after Sending of a Consecutive Frame	N/A	150
P3_CAN_ECU	Minimal Time between response from the ECU and the next request from the tester	5 ms	N/A
Stmin,r	Stmin,r is the timing parameter in the FC sent by a tester to control the transmission rate of CF frames sent by the ECU	0 ms	127 ms
Stmin,s	Stmin,s is the timing parameter in the FC sent by a ECU to control the transmission rate of CF frames sent by the tester	N/A	10

3.1.6.2. Timeout Parameters

Parameter	Description	Min Value	Max Value
As/Ar	Timeout for a ECU to access a network and to transmit a diagnostic CAN frame	N/A	1000
Bs	Timeout for a ECU to wait for a Flow Control from the tester after sending a First Frame (or a Next Consecutive Frame)	N/A	1000
Cr	Timeout for a ECU to wait for a Consecutive Frame after Sending a Flow Control Frame or Receiving a Consecutive Frame	N/A	800
S3_ECU	Timeout for a ECU wait for any diagnostic request message to keep a diagnostic session other than Default Session active.	N/A	5000 ms

© This document is the exclusive property of Robert Bosch GmbH. Without their consent it may not be reproduced or given to third parties.
If printed this is a uncontrolled document. The user must verify it is an authorized edition prior to use.

3.2. Communication Manager

3.2.1. Session Handling

Any diagnostic session will be active as long as the ECU is powered.

Timeout Monitoring (S3max):
If the ECU is not in the Default Session and not receiving any request from the diagnostic tool for P3_ECU_CAN the ECU will start the Default Session.

3.2.2. Concurrent Tester Present ("Keep Alive" Logic)

There is only one diagnostic protocol instance available in the ECU, which can handle only one request at a time. The rule is that any received message (regardless of addressing mode Physical or Functional) occupies this resource until the request message is processed (with final response sent or application call without response).

There is one exception from this rule: The Keep-Alive-Logic in the ECU. A functionally addressed valid Tester Present message with SPRMIB (Suppress Positive Response Message Indication Bit) = 01h can be processed in parallel.

3.2.3. Suppress Positive Response Bit

The Suppress Positive Response Bit is only supported for services which are explicitly specified to be addressed functionally. The Suppress Positive Response bit is then considered for both address types.

The Suppress Positive Response Bit is not supported for services which are not explicitly specified to be addressed functionally. A service with SPRMIB (Suppress Positive Response Message Indication Bit) = 01h is answered with a negative response message with negative response code “sub function not supported”.

Behaviour for Physical Addressing:
- The positive response may be suppressed if the optional Suppress Positive Response Message Indication Bit is set.
- The ECU is always sending a negative response.

Behaviour for Functional Addressing:
- The positive response may be suppressed if the optional Suppress Positive Response Message Indication Bit is set.
- The ECU is always sending a negative response, except for the negative response codes SNS (Service Not Supported), SFNS (Sub Function Not Supported) or ROOR (Request Out Of Range) if the message is addressed functionally.

3.2.4. Speed Limit

If the *Extended Diagnostic Session* is active, a speed limit monitoring is active.

The speed limit value is defined to **10** km/h. As soon as this vehicle speed is exceeded, the Extended Diagnostic Session is automatically deactivated.

Speed limit monitoring can be deactivated by an actuator number (refer to service ID $31).

© This document is the exclusive property of Robert Bosch GmbH. Without their consent it may not be reproduced or given to third parties.
If printed this is a uncontrolled document. The user must verify it is an authorized edition prior to use.

Activation of the Extended Diagnostic Session is not allowed if the speed limit is already exceeded if service $10 is received.

© This document is the exclusive property of Robert Bosch GmbH. Without their consent it may not be reproduced or given to third parties.
If printed this is a uncontrolled document. The user must verify it is an authorized edition prior to use.

3.3. Application: Diagnostic Services

3.3.1. Service $10 – Diagnostic Session Control

3.3.1.1. Description

The Diagnostic session control service is used to enable different diagnostic sessions in the ECU.

State Transitions

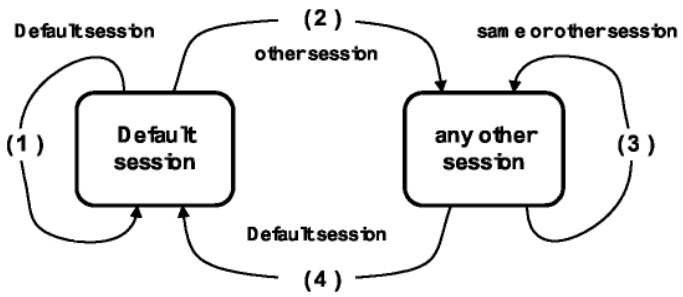

•If a diagnostic session, which is already active, is requested by the diagnostic tool, then the ECU is sending a positive response message and performs all initialisation in the same way as if it changed from a different session.

•Start default session:
The ECU is initializing the default session. The ECU is resetting all activated settings & controls. This session is active after power on or after an explicit change to Default Session.

Start any other session:
The ECU is (re-) initializing the requested session. The states of Communication Control and Control DTC Setting services are not affected.

3.3.1.2. Availability

Supported Diagnostic Sessions	X	Default Session
	X	Extended Diagnostic Session
Supported Addressing Modes	X	Physical
	X	Functional

© This document is the exclusive property of Robert Bosch GmbH. Without their consent it may not be reproduced or given to third parties.
If printed this is a uncontrolled document. The user must verify it is an authorized edition prior to use.

3.3.1.3. Request Message

Byte	Bit	Description	Value + Unit	LSB	Offset
1		Request Service Id = [Diagnostic Session Control]	$10		
2	0..6	Sub Function Diagnostic Session Type	$xx		
	7	Suppress Positive Response Bit	0 = ECU is sending a positive response 1 = ECU is not sending a positive response		

Diagnostic Session Type
Select the desired diagnostic session. Refer to the subsections below for additional details.

Value	Description
$01	Default Session
$02	Reprogramming Session
$03	Extended Diagnostic Session

3.3.1.4. Response Message

Byte	Bit	Description	Value + Unit	LSB	Offset
1		Response Service Id = [Diagnostic Session Control]	$50		
2		Diagnostic Session Type	$xx		
3..4		P2_CAN_ECU_max	0 .. 65535 ms	1	0
5..6		P2*_CAN_ECU_max	0 .. 655350 ms	10	0

3.3.1.5. Negative Response Codes

Value	Description
$12	Sub Function Not Supported
$13	Incorrect Message Length
$22	Conditions Not Correct
$78	Request Correctly Received – Response Pending

3.3.1.6. Subfunction $01 – Default Session

The ECU starts in the Default Session when powered up.
The Default Session has no influence on controller functionality.

3.3.1.7. Subfunction $02 – Reprogramming Session

The ECU will always send a Negative Response with response code Response Pending (78h) to start the Reprogramming Session in order to fulfil P2_CAN_ECU CAN timing specifications.

According to UDS in this case also a Final Positive Response Message has to be send. (The Suppress Positive Response Bit will not be considered).

© This document is the exclusive property of Robert Bosch GmbH. Without their consent it may not be reproduced or given to third parties.
If printed this is a uncontrolled document. The user must verify it is an authorized edition prior to use.

The ECU Flash Reprogramming Session is safety protected and will only be started if the following requirements are met:

- No controller intervention (ABS, ASR and FZR).
- At least 3 Wheel Speeds < 10 km/h

Note:
・ CAN Communication is only available for the Diagnostic Flash Reprogramming protocol.
・ This document does not refer to services which only available in the Reprogramming Session.

3.3.1.8. Subfunction $03 – Extended Diagnostic Session

The Extended Diagnostic Session allows dedicated actuator activations and advanced troubleshooting routines. As long as the extended diagnostic session is running, no controller is active to prevent actuation conflicts.

Additionally, this session is protected by a speed limit of 10 km/h. The session cannot be activated if the speed limit is exceeded. Also, a currently active extended diagnostic session is terminated when the speed limit is exceeded.

The Extended Diagnostic Session is safety protected and will only be started if the following requirements are met:
- No controller intervention (ABS, ASR and FZR).
- At least 3 Wheel Speeds < 10 km/h

© This document is the exclusive property of Robert Bosch GmbH. Without their consent it may not be reproduced or given to third parties.
If printed this is a uncontrolled document. The user must verify it is an authorized edition prior to use.

3.3.2. Service $11 – ECU Reset

3.3.2.1. Description

This service requests the ECU to effectively perform a reset. The ECU Reset positive response message (if required) is sent before the reset is executed in the ECU.

After a successful reset the ECU is starting the default diagnostic session.

3.3.2.2. Availability

Supported Diagnostic Sessions	**X**	Default Session
	X	Extended Diagnostic Session
Supported Addressing Modes	**X**	Physical
	X	Functional

3.3.2.3. Request Message

Byte	Bit	Description	Value + Unit	LSB	Offset
1		Request Service Id = [Diagnostic Session Control]	$11		
2	0..6	Sub Function = [Reset Type]	$01 = Hard Reset $03 = Soft Reset		
	7	Suppress Positive Response Bit	0 = ECU is sending a positive response 1 = ECU is not sending a positive response		

3.3.2.4. Response Message

Byte	Bit	Description	Value + Unit	LSB	Offset
1		Response Service Id = [ECU Reset]	$51		
2		Sub Function = [Reset Type]	$01 / $03		

3.3.2.5. Negative Response Codes

Value	Description
$12	Sub Function Not Supported
$13	Incorrect Message Length

© This document is the exclusive property of Robert Bosch GmbH. Without their consent it may not be reproduced or given to third parties.
If printed this is a uncontrolled document. The user must verify it is an authorized edition prior to use.

3.3.3. Service $14 – Clear Diagnostic Information

3.3.3.1. Description

The service Clear Diagnostic Information is used to clear the diagnostic information stored in the ECU's memory. The diagnostic information consists of

- DTC status bytes
- Captured snapshot data

Clear Diagnostic Information resets any "drive-cycle" faults, which might require a dedicated good-check in subsequent ignition/power cycles.

3.3.3.2. Availability

Supported Diagnostic Sessions	X	Default Session
	X	Extended Diagnostic Session
Supported Addressing Modes	X	Physical
		Functional

3.3.3.3. Request Message

Byte	Bit	Description	Value + Unit	LSB	Offset
1		Request Service Id = [ClearDTCInformation]	$14		
2..4		groupOfDTC[] = [groupOfDTCHighByte groupOfDTCMiddleByte groupOfDTCLowByte]	 $xx $xx $xx		

The only supported groupOfDTC is "All Groups (all DTCs)".

Byte	Bit	Description	Value + Unit	LSB	Offset
1		Request Service Id = [ClearDTCInformation]	$14		
2..4		groupOfDTC[] = [All Groups (all DTCs)]	$FF $FF $FF		

3.3.3.4. Response Message

Byte	Bit	Description	Value + Unit	LSB	Offset
1		Response Service Id = [Clear Diagnostic Information]	$54		

3.3.3.5. Negative Response Codes

Value	Description
$13	Incorrect Message Length
$22	Conditions Not Correct
$31	Request Out Of Range
$78	Request Correctly Received – Response Pending

© This document is the exclusive property of Robert Bosch GmbH. Without their consent it may not be reproduced or given to third parties.
If printed this is a uncontrolled document. The user must verify it is an authorized edition prior to use.

3.3.4. Service $19 – Read DTC Information

3.3.4.1. Description

The service Read DTC Information allows a client to read DTC information from the ECU. The type of information which is read depends on the selected subfunction.
The EEPROM based fault memory of the ECU supports 20 failure entries. The Status of DTC parameter “Warning Indicator” is supported for confirmed DTCs only.

3.3.4.2. Availability

Supported Diagnostic Sessions	**X**	Default Session
	X	Extended Diagnostic Session
Supported Addressing Modes	**X**	Physical
		Functional

3.3.4.3. Request Message

Byte	Bit	Description	Value + Unit	LSB	Offset
1		Request Service Id = [ReadDTCInformation]	$19		
2		Subfunction	$xx		
3..x		Additional Data	...		

Note: The additional data depends on the Subfunction. Request messages are described for each sub function later on.

3.3.4.4. Response Message

Byte	Bit	Description	Value + Unit	LSB	Offset
1		Response Service Id = [ReadDTCInformation]	$59		
2		Subfunction	$xx		
3..x		Additional Data	...		

Note: The additional data depends on the Subfunction. Request messages are described for each sub function later on.

3.3.4.5. Negative Response Codes

Value	Description
$12	Sub Function Not Supported
$13	Incorrect Message Length
$22	Conditions Not Correct
$31	Request Out Of Range
$78	Request Correctly Received – Response Pending
$7F	Service Not Supported in Active Session

© This document is the exclusive property of Robert Bosch GmbH. Without their consent it may not be reproduced or given to third parties.
If printed this is a uncontrolled document. The user must verify it is an authorized edition prior to use.

3.3.4.6. Subfunction $01 – Report Number Of DTC By Status Mask

The Subfunction $01 – Report Number of DTC by Status Mask can be used to retrieve the number of diagnostic trouble codes matching a defined status mask to the diagnostic tool

Structure of the parameters statusOfDTC and DTCStatusMask:

Bit	Description
0	Test Failed (01h = Yes)
1	Reserved (0)
2	Reserved (0)
3	confirmedDTC (01h = Yes)
4	Test Not Complete Since Last Clear (01h = Yes)
5	Test Failed Since Last Clear (01h = Yes)
6	Reserved (0)
7	Warning Indicator requested (01h = Yes)

3.3.4.6.1. Request Message

Byte	Bit	Description	Value + Unit	LSB	Offset
1		Request Service Id = [ReadDTCInformation]	$19		
2		Subfunction reportDTCByStatusMask	$01		
3		DTCStatusMask	$xx		

3.3.4.6.2. Response Message

Byte	Bit	Description	Value + Unit	LSB	Offset
1		Response Service Id = [ReadDTCInformation]	$59		
2		Subfunction reportDTCByStatusMask	$01		
3		DTCStatusMask	$B9		
4		DTC Format Identifier [00h] ISO15031-6 DTC Format	$00		
5 6		DTC Count Byte #1 DTC Count High Byte Byte #2 DTC Count Low Byte	$00-$FF $00-$FF		

3.3.4.7. Subfunction $02 – Report DTC By Status Mask

The Subfunction $02 – Report DTC By Status Mask can be used to retrieve a list of DTCs including their status.

Structure of the parameters statusOfDTC and DTCStatusMask:

Bit	Description
0	Test Failed (01h = Yes)
1	Reserved (0)
2	Reserved (0)
3	*confirmedDTC (01h = Yes)*

© This document is the exclusive property of Robert Bosch GmbH. Without their consent it may not be reproduced or given to third parties.
If printed this is a uncontrolled document. The user must verify it is an authorized edition prior to use.

4	Test Not Complete Since Last Clear (01h = Yes)
5	Test Failed Since Last Clear (01h = Yes)
6	Reserved (0)
7	Warning Indicator requested (01h = Yes)

Confirmed DTC:
This bit indicates if a set of DTC Snapshot Data Records was stored in the failure memory and is currently available. The maximum number of stored DTCs is 20.

A value of 1 indicates that snapshot information is currently available; a value of 0 indicates that currently there is no snapshot information available.

This bit is reset to 0 after the run of Clear Diagnostic Information . This bit is saved in non-volatile memory.

The DTCs are filtered by the DTCStatusMask which is part of the request. The evaluation is done as a bit-wise logical AND-ing operation between the DTCStatusMask and the statusOfDTC. Whenever the result of this AND-ing operation is not zero, the DTC will be part of the list that is sent by the ECU. If the client uses bits in the DTCStatusMask that are not supported by the ECU, the ECU will ignore these bits and just use the bits that are supported.

```
IF [DTCStatusMask & statusOfDTC] > 1
        SEND DTC
ELSE
        DO NOT SEND DTC
```

3.3.4.7.1. Request Message

Byte	Bit	Description	Value + Unit	LSB	Offset
1		Request Service Id = [ReadDTCInformation]	$19		
2		Subfunction reportDTCByStatusMask	$02		
3		DTCStatusMask	$xx		

© This document is the exclusive property of Robert Bosch GmbH. Without their consent it may not be reproduced or given to third parties.
If printed this is a uncontrolled document. The user must verify it is an authorized edition prior to use.

3.3.4.7.2. Response Message

Byte	Bit	Description	Value + Unit	LSB	Offset
1		Response Service Id = [ReadDTCInformation]	$59		
2		Subfunction reportDTCByStatusMask	$02		
3		DTCStatusAvailabilityMask	$B9		
		DTCAndStatusRecord[] = [			
4		DTCHighByte#1	$xx		
5		DTCMiddleByte#1	$xx		
6		DTCLowByte#1	$xx		
7		statusOfDTC#1	$xx		
8		DTCHighByte#2	$xx		
9		DTCMiddleByte#2	$xx		
10		DTCLowByte#2	$xx		
11		statusOfDTC#2	$xx		
..		..	$xx		
..		..	$xx		
n-3		DTCHighByte#m	$xx		
n-2		DTCMiddleByte#m	$xx		
n-1		DTCLowByte#m	$xx		
n		statusOfDTC#m]	$xx		

Remark:

- ・The parameters DTC #1 and Status of DTC #1 are only present if a least one DTC is available to be reported according to the requested DTC Status Mask.
- ・The parameters DTC #n and Status of DTC #n are only present if more than one DTCs are available to be reported according to the requested DTC Status Mask.

3.3.4.8. Subfunction $06 – Report DTC Extended Data Record By DTC Number

The Subfunction $06 – Report DTC Extended Data Record By DTC Number can be used to retrieve the environmental data from the fault memory, associated with a particular DTC.

3.3.4.8.1. Request Message

Byte	Bit	Description	Value + Unit	LSB	Offset
1		Request Service Id = [ReadDTCInformation]	$19		
2		Subfunction reportDTCExtendedDataRecordByDTCNumber	$06		
		DTCMaskRecord[] = [	$FF		
3		DTCHighByte			
4		DTCMiddleByte			
5		DTCLowByte]			
6		DTCExtendedRecordNumber	$01 or $FF		

DTCExtendedRecordNumber = [FFh] for reporting all Records

© This document is the exclusive property of Robert Bosch GmbH. Without their consent it may not be reproduced or given to third parties.
If printed this is a uncontrolled document. The user must verify it is an authorized edition prior to use.

3.3.4.8.2. Response Message

Byte	Bit	Description	Value + Unit	LSB	Offset
1		Response Service Id = [ReadDTCInformation]	$59		
2		Subfunction reportDTCExtendedDataRecordByDTCNumber	$06		
3 4 5 6		DTCAndStatusRecord[] = [DTCHighByte#1 DTCMiddleByte#1 DTCLowByte#1 statusOfDTC#m]	$xx $xx $xx $xx		
7		ExtendedDataRecord No 1	$01		
8..9		Original Odometer Byte #1 Original Odometer (High Byte) Byte #2 Original Odometer (Low Byte) Format: 1 Bit = 16km (unsigned Hex) Range: [0000h] ... [FFFFh] (0km...1048560km): Odometer value above 1048560km will be limited to 0xFFFF. Odometer value at the original (first) instance of a specific fault.	$00-FF $00-FF	16 Km	
10..11		Most Recent Odometer Byte #1 Original Odometer (High Byte) Byte #2 Original Odometer (Low Byte) Format: 1 Bit = 16km (unsigned Hex) Range: [0000h] ... [FFFFh] (0km...1048560km): Odometer value above 1048560km will be limited to 0xFFFF. Odometer value at the most recent instance of a specific fault The Most Recent Odometer is updated when a DTC status is changing from “not active” to “active” and when the DTC status was not active in the previous operation cycle!	$00-FF $00-FF	16km	
12.		UVR Format: 1 Bit = 0,08 V (unsigned Hex) Range: 0 V ... 20,4 V [00h ... FFh] Valve Relay Voltage (voltage after valve relay) The UVR voltage is only available in Extended Session. VR is switched OFF in Normal Session and only active during regulation.	$00-$FF (0 .. 20.4 V)	0.08	0
13		UB ECU Format: 1 Bit = 0,08 V (unsigned Hex) Range: 0 V ... 20,4 V [00h ... FFh] Power Supply of electronic components like µC	$00-$FF (0 .. 20.4 V)	0.08	0
14	0-6 7	Wheel Speed Front Left Resolution: 1 Bit = 2 km/h (Unsigned Hex) Range: 0 km/h … 252 km/h [00h … 7Eh] Signal not valid: [7Fh] Reserved	$00-$FF (0 .. 252 km/h)	1Bit = 2km/h	0
15	0-6 7	Wheel Speed Front Right Resolution: 1 Bit = 2 km/h (Unsigned Hex) Range: 0 km/h … 252 km/h [00h … 7Eh] Signal not valid: [7Fh] Reserved	$00-$FF (0 .. 252 km/h)	1Bit = 2km/h	0

© This document is the exclusive property of Robert Bosch GmbH. Without their consent it may not be reproduced or given to third parties.
If printed this is a uncontrolled document. The user must verify it is an authorized edition prior to use.

16	0-6 7	Wheel Speed Rear Left Resolution: 1 Bit = 2 km/h (Unsigned Hex) Range: 0 km/h … 252 km/h [00h … 7Eh] Signal not valid: [7Fh] Reserved	$00-$FF (0 .. 252 km/h)	1Bit = 2km/h	0
17	0-6 7	Wheel Speed Rear Right Resolution: 1 Bit = 2 km/h (Unsigned Hex) Range: 0 km/h … 252 km/h [00h … 7Eh] Signal not valid: [7Fh] Reserved	$00-$FF (0 .. 252 km/h)	1Bit = 2km/h	0
18		Power Supply of Valves-UBVR Format: 1 Bit = 0,08 V (unsigned Hex) Range: 0 V ... 20,4 V [00h ... FFh] Power Supply of Valves	0 .. 20.4 V	0.08	0
19		UPump - Supply Pump Voltage Format: 1 Bit = 0,08 V (unsigned Hex) Range: 0 V ... 20,4 V [00h ... FFh] Hint: For RFP control via ANS (Adaptive Noise Shaping) UB (U_{Battt}) Pump is physically measured For all other Pump control UB Pump is measured after motor relay.	0 ...20.4 V	0.08	
20		Master Cylinder Pressure Format: 1 Bit = 1.00 bar (Unsigned Hex) Range: -43bar … 211bar [00h … FEh] Offset: -43bar Signal not valid: [FFh]	$00 - $FE	1bar	-43bar
21		Steering Angle (SA) Format: 1 Bit = 6.4 ° (Signed Hex) Range: -819,2 ° ... +806,4 ° [80h … FFh, 00h … 7Eh] Signal not valid: [7Fh]	$00 - $FF	6.4deg	
22		Longitudinal Acceleration (AX) Format: 1 Bit = 0.1574 m/s2 (Signed Hex) Range: -20.14 m/s2 ... + 19.98 m/s2 [80h ... FFh, 00h ... 7Eh] Signal not valid: [7Fh]	$00 - $FF	0.1574 m/s2	
23		Lateral Acceleration (AY) Format: 1 Bit = 0,1574 m/s2 (Signed Hex) Range: -20,14 m/s2 ... +19.98 m/s2 [80h ... FFh, 00h ... 7Eh] Signal not valid: [7Fh]	$00 - $FF	0.1574 m/s2	
24		Yaw Rate (YRS) Format: 1 Bit = 0,902 °/s (Signed Hex) Range: -115,45 °/s ... +114.54°/s [80h ... FFh, 00h ... 7Eh] Signal not valid: [7Fh]	$00 - $FF		
25	0 1 2 3 4 5 6 7	Controller Status = [EBD ABS ASR(TCS) MSR(DTC) ESP(VDC) HHC] Configuration Status = [TCS Configuration Reserved	 0 = Inactive, 1 = Active 0 = Inactive, 1 = Active 0 = Inactive, 1 = Active 0 = Inactive, 1 = Active 0 = Inactive, 1 = Active 0 = Inactive, 1 = Active 0 = Bosch TCS, 1 = Tesla TCS 0		
26, 27		Monitoring ID (Internal Bosch ID for a monitoring). Refer to DDL document for ID description	Byte 26: High Byte MID Byte 27: Low Byte MID		

© This document is the exclusive property of Robert Bosch GmbH. Without their consent it may not be reproduced or given to third parties.
If printed this is a uncontrolled document. The user must verify it is an authorized edition prior to use.

3.3.5. Service $22 – Read Data By Identifier

3.3.5.1. Description

This service allows the diagnostic tool to request data record values from the ECU identified by Record Data Identifiers. The client request message contains one 2-byte Data Identifier values that identifies the requested Data Record.

3.3.5.2. Availability

Supported Diagnostic Sessions	**X**	Default Session
	X	Extended Diagnostic Session
Supported Addressing Modes	**X**	Physical
		Functional

3.3.5.3. Request Message

Byte	Bit	Description	Value + Unit	LSB	Offset
1		Request Service Id = [Read Data By Identifier]	$22		
2..3		Identifier	$xxxx		

3.3.5.4. Response Message

Refer to the subsection for each identifier for further details.

3.3.5.5. Negative Response Codes

Value	Description
$13	Incorrect Message Length
$31	Request Out Of Range
$22	Conditions not correct – EEPROM error
$78	Request Correctly Received – Response Pending

© This document is the exclusive property of Robert Bosch GmbH. Without their consent it may not be reproduced or given to third parties.
If printed this is a uncontrolled document. The user must verify it is an authorized edition prior to use.

3.3.5.6. Identifier $F180 – Boot Software Version Information

This identifier allows identifying the boot loader SW version details.

Byte	Bit	Description	Value + Unit	LSB	Offset
1		Response Service Id = [Read Data By Identifier]	$62		
2..3		Identifier = [BootSoftwareVersionInformation]	$F180		
4..22		Boot Software Version Information Byte 0: Number of modules reported (value is always 0x01). Byte 1: MSB of Component ID, Byte 2: LSB of Component ID, Byte 3: PCBA ID, Byte 4: Assembly ID, Byte 5: MSB of Usage ID, Byte 6: LSB of Usage ID, Byte 7: 0x00 (unused), Byte 8: Firmware Type Bytes 9-12: 32 bit SVN revision number (MSB at byte 9 and LSB at byte 12) Bytes 13-16: 32 bit SVN URL Hash (MSB at byte 13 and LSB at byte 16) Bytes 17-18: 16 bit Build Configuration ID (MSB at byte 17 and LSB at byte 18)	$00-$FF		

3.3.5.7. Identifier $F181 – Application Software Identification Data Identifier

Byte	Bit	Description	Value + Unit	LSB	Offset
1		Response Service Id = [Read Data By Identifier]	$62		
2..3		Identifier = [ApplicationSoftwareIdentificationDataIdentifier]	$F181		
4 - 15		Software Part Number – AS Byte #1 Software Part Number High Byte Byte #2 Software Part Number Byte #3 Software Part Number Byte #4 Software Part Number Byte #5 Software Part Number Byte #6 Software Part Number Byte #7 Software Part Number Byte #8 Software Part Number Byte #9 Software Part Number Byte #10 Software Part Number Byte #11 Software Part Number Byte #12 Software Part Number Low Byte	ASCII $00-$FF		

Delivery content of all bytes is to be defined separately and not part of this document.

3.3.5.8. Identifier $F186 – Active Diagnostic Session Data Identifier

This identifier return the currently active diagnostic session, selected with service ID $10.

Byte	Bit	Description	Value + Unit	LSB	Offset
1		Response Service Id = [Read Data By Identifier]	$62		

© This document is the exclusive property of Robert Bosch GmbH. Without their consent it may not be reproduced or given to third parties.
If printed this is a uncontrolled document. The user must verify it is an authorized edition prior to use.

2..3		Identifier = [ActiveDiagnosticSessionDataIdentifier]	$F186		
4		Diagnostic Session Type [01h] Default Diagnostic Session [02h] Programming Session [03h] Extended Diagnostic Session	$xx		

If there is an internal error by getting the actual session, then the return session value is 0xFF.

3.3.5.9. Identifier $F1A0 – VIN Data Identifier

This identifier returns the Vehicle Identification Number, which is stored in EEPROM. Refer to service ID $31 for the learn routine of this identifier. A range of 17 bytes of EEPROM is reserved, which allows storing the VIN in ASCII format.

Byte	Bit	Description	Value + Unit	LSB	Offset
1		Response Service Id = [Read Data By Identifier]	$62		
2..3		Identifier = [VINDataIdentifier]	$F1A0		
4 .. 20		Vehicle Identification Number	17-byte ASCII		

EEPROM data is protected by checksum algorithms. If the EEPROM data is corrupted the negative response 0x22 will be returned. If PDM is empty all values will be return as 0x00.

3.3.5.10. Identifier $F191 – Vehicle Manufacturer ECU Hardware Number Data Identifier

Byte	Bit	Description	Value + Unit	LSB	Offset
1		Response Service Id = [Read Data By Identifier]	$62		
2..3		Identifier = [VehicleManufacturerECUHardwareNumberDataIdentifier]	$F191		
4 - 15		Software Part Number – AS Byte #1 Software Part Number High Byte Byte #2 Software Part Number Byte #3 Software Part Number Byte #4 Software Part Number Byte #5 Software Part Number Byte #6 Software Part Number Byte #7 Software Part Number Byte #8 Software Part Number Byte #9 Software Part Number Byte #10 Software Part Number Byte #11 Software Part Number Byte #12 Software Part Number Low Byte	ASCII $00-$FF		

The $F191 delivers the same information as the $F181.
Delivery content of all bytes is to be defined separately and not part of this document.

3.3.5.11. Identifier $F193 – System Supplier ECU Hardware Version Number Data Identifier

This identifier allows identifying the HW version details.

Byte	Bit	Description	Value + Unit	LSB	Offset

© This document is the exclusive property of Robert Bosch GmbH. Without their consent it may not be reproduced or given to third parties.
If printed this is a uncontrolled document. The user must verify it is an authorized edition prior to use.

1		Response Service Id = [Read Data By Identifier]	$62		
2..3		Identifier = [SystemSupplierECUHardwareVersionNumberDataIdentifier]	$F193		
4..6		Hardware Version Information Major Byte Year Middle Byte Week Minor Byte Patch Level	 $00-$FF $01-$35 $00-$FF		

EEPROM data is protected by checksum algorithms. If the EEPROM data is corrupted (e.g. because of power loss during writing), negative response 0x22 will be returned. If PDM is empty all values will be return as 0x00.
Delivery content of all bytes is to be defined separately and not part of this document.

3.3.5.12. Identifier $F194 – System Supplier ECU Software Number Data Identifier

This identifier allows identifying the application SW details.

Byte	Bit	Description	Value + Unit	LSB	Offset
1		Response Service Id = [Read Data By Identifier]	$62		
2..3		Identifier = [SystemSupplierECUSoftwareNumberDataIdentifier]	$F194		
4 - 8		Bosch Software BB-Number Byte #1 Bosch BB-Number – (High Byte) Byte #2 Bosch BB-Number Byte #3 Bosch BB-Number Byte #4 Bosch BB-Number Byte #5 Bosch BB-Number – (Low Byte)	ASCII $00-$FF		
9..16		Bosch Software Version Number Byte #1 Bosch Software Version Number – (MSB) Byte #2 Bosch Software Version Number Byte #3 Bosch Software Version Number Byte #4 Bosch Software Version Number Byte #5 Bosch Software Version Number Byte #6 Bosch Software Version Number Byte #7 Bosch Software Version Number Byte #8 Bosch Software Version Number – (LSB)	ASCII $00-$FF		

3.3.5.13. Identifier $F195 – System Supplier ECU Software Version Number Data Identifier

This identifier allows identifying the SW version details.

Byte	Bit	Description	Value + Unit	LSB	Offset
1		Response Service Id = [Read Data By Identifier]	$62		
2..3		Identifier = [SystemSupplierECUSoftwareVersionNumberDataIdentifier]	$F195		
4..6		Software Version Information Major Byte Year Middle Byte Week Minor Byte Patch Level	 $00-$FF $01-$35 $00-$FF		

© This document is the exclusive property of Robert Bosch GmbH. Without their consent it may not be reproduced or given to third parties.
If printed this is a uncontrolled document. The user must verify it is an authorized edition prior to use.

3.3.5.14. Identifier $F212 – Vehicle Performance Configuration Data Identifier

This identifier allows identifying the vehicle performance configuration.

Byte	Bit	Description	Value + Unit	LSB	Offset
1		Response Service Id = [Read Data By Identifier]	$62		
2..3		Identifier = [VehiclePerformanceConfigurationDataIdentifier]	$F212		
4		Configured vehicle performance	$00: Not configured $01: 4WD Vehicle $02: 2WD Vehicle $else: invalid / not configured		

3.3.5.15. Identifier $FD00 – Speed Information Data Identifier

This identifier allows reading information about the current wheel speeds.

Byte	Bit	Description	Value + Unit	LSB	Offset
1		Response Service Id = [Read Data By Identifier]	$62		
2..3		Identifier = [SpeedInformationDataIdentifier]	$FD00		
4..5		Wheel Speed Front Left Byte #1 Wheel Speed (High Byte) Byte #2 Wheel Speed (Low Byte) Format: 1 Bit = 1/64 m/s (unsigned Hex) Range: 0 m/s … 100 m/s [0000h … 1900h]	0…100m/s	0.015625	0
6..7		Wheel Speed Front Right Byte #1 Wheel Speed (High Byte) Byte #2 Wheel Speed (Low Byte) Format: 1 Bit = 1/64 m/s (unsigned Hex) Range: 0 m/s … 100 m/s [0000h … 1900h]	0…100m/s	0.015625	0
8..9		Wheel Speed Rear Left Byte #1 Wheel Speed (High Byte) Byte #2 Wheel Speed (Low Byte) Format: 1 Bit = 1/64 m/s (unsigned Hex) Range: 0 m/s … 100 m/s [0000h … 1900h]	0…100m/s	0.015625	0
10..11		Wheel Speed Rear Right Byte #1 Wheel Speed (High Byte) Byte #2 Wheel Speed (Low Byte) Format: 1 Bit = 1/64 m/s (unsigned Hex) Range: 0 m/s … 100 m/s [0000h … 1900h]	0…100m/s	0.015625	0
12		Wheel Speed Qualifiers			
	0	Wheel Speed Front Left	[1] = Valid; [0] = Invalid		
	1	Wheel Speed Front Right	[1] = Valid; [0] = Invalid		
	2	Wheel Speed Rear Left	[1] = Valid; [0] = Invalid		
	3	Wheel Speed Rear Right	[1] = Valid; [0] = Invalid		
	4..7	Reserved (set to 0)			

3.3.5.16. Identifier $FD01 – Input Data Identifier

This identifier allows reading information about several ECU inputs.

Byte	Bit	Description	Value + Unit	LSB	Offset
1		Response Service Id = [Read Data By Identifier]	$62		
2..3		Identifier = [InputDataIdentifier]	$FD01		

© This document is the exclusive property of Robert Bosch GmbH. Without their consent it may not be reproduced or given to third parties.
If printed this is a uncontrolled document. The user must verify it is an authorized edition prior to use.

4		Battery Voltage	0 .. 20.4 V	0.08	0
5		Brake Light Switch	$00 = not applied $01 = applied		

3.3.5.17. Identifier $FD02 – Actuation State Data Identifier

This identifier allows reading information about the actuation state of the ECU's actuators.

Byte	Bit	Description	Value + Unit	LSB	Offset
1		Response Service Id = [Read Data By Identifier]	$62		
2..3		Identifier = [ActuationStateDataIdentifier]	$FD02		
4	0	Valve Actuation State: Inlet Valve Front Left (EVFL)	0 = inactive, 1 = active		
	1	Valve Actuation State: Outlet Valve Front Left (AVFL)	0 = inactive, 1 = active		
	2	Valve Actuation State: Inlet Valve Front Right (EVFR)	0 = inactive, 1 = active		
	3	Valve Actuation State: Outlet Valve Front Left (AVFR)	0 = inactive, 1 = active		
	4	Valve Actuation State: Inlet Valve Rear Left (EVRL)	0 = inactive, 1 = active		
	5	Valve Actuation State: Outlet Valve Rear Left (AVRL)	0 = inactive, 1 = active		
	6	Valve Actuation State: Inlet Valve Rear Right (EVRR)	0 = inactive, 1 = active		
	7	Valve Actuation State: Outlet Valve Rear Left (AVRR)	0 = inactive, 1 = active		
5	0	Valve Actuation State: Valve USV1	0 = inactive, 1 = active		
	1	Valve Actuation State: Valve USV2	0 = inactive, 1 = active		
	2	Valve Actuation State: Valve HSV1	0 = inactive, 1 = active		
	3	Valve Actuation State: Valve HSV2	0 = inactive, 1 = active		
	4	Valve Relay Status	0 = error, 1 = state OK		
	5	Pump Motor Status	0 = inactive, 1 = active		
	6	Electric Vacuum Pump (Not For Tesla ESP 2.0)	0 = inactive, 1 = active		
	7	Reserved	0		

3.3.5.18. Identifier $FD03 – System Sensor Data Identifier

This identifier allows reading information about the sensors delivering data to the ECU.

Byte	Bit	Description	Value + Unit	LSB	Offset
1		Response Service Id = [Read Data By Identifier]	$62		
2..3		Identifier = [SystemSensorDataIdentifier]	$FD03		
4 .. 5		Master Cylinder Pressure Byte #1 Master Cylinder Pressure (High Byte) Byte #2 Master Cylinder Pressure (Low Byte) Format: 1 Bit = 0,01533 bar (signed Hex) Range: -42,5 bar … +425,0 bar [F526h … FFFFh, 0000h … 6C82h]	$00 - $FF		
6	0 1-7	Status of Master Cylinder Pressure Status of Master Cylinder Pressure signal [00h] = signal invalid [01h] = signal valid Reserved (set to zero)	$00 - $FF		
7..8		Steering Angle Byte #1 Steering Angle (High Byte) Byte #2 Steering Angle (Low Byte) Format: 1 Bit = 0,1 ° (signed Hex) Range: -819.2 ° … +819 ° [E000h … FFFFh, 0000h … 1FFEh]	$00 - $FF	0.1 deg	
9	0	Status of Steering Angle Sensor (SA) Status of SA signal [00h] = signal invalid	$00 - $FF		

© This document is the exclusive property of Robert Bosch GmbH. Without their consent it may not be reproduced or given to third parties.
If printed this is a uncontrolled document. The user must verify it is an authorized edition prior to use.

	1-7	[01h] = signal valid Reserved (set to zero)			
10..11		Yaw Rate Byte #1 Yaw Rate (High Byte) Byte #2 Yaw Rate (Low Byte) Format: 1 Bit = 0,12219 °/s (signed Hex) Range: -120,0 °/s … +120,0 °/s [FC2Ah … FFFFh, 0000h … 03D6h]	$00 - $FF		
12	0 1-7	Status of Yaw Rate (YR) Bit 0 Status of YR signal [00h] = signal invalid [01h] = signal valid Bit 1...7 Reserved (set to zero)	$00 - $FF		
13..14		Lateral Acceleration (Ay) Byte #1 Lateral Acceleration (High Byte) Byte #2 Lateral Acceleration (Low Byte) Format: 1 Bit = 0,02713 m/s2 (signed Hex) Range: -21,59 m/s2 … +21,59 m/s2 [FCE4h … FFFFh, 0000h, … 031Ch]	$00 - $FF		
15	0 1-7	Status of Lateral Acceleration (AY) Status of AY signal [00h] = signal invalid [01h] = signal valid Reserved (set to zero)	$00 - $FF		
16..17		Longitudinal Acceleration (Ax) Byte #1 Longitudinal Acceleration (High Byte) Byte #2 Longitudinal Acceleration (Low Byte) Format: 1 Bit = 0,02713 m/s2 (signed Hex) Range: -21,59 m/s2 … +21,59 m/s2 [FCE4h … FFFFh, 0000h, … 031Ch]	$00 - $FF		
18	0 1-7	Status of Longitudinal Acceleration (AX) Status of AX signal [00h] = signal invalid [01h] = signal valid Reserved (set to zero)	$00 - $FF		
19..20		Pressure Vacuum Sensor (Not For Tesla ESP 2.0) Byte #1 Pressure from Vacuum Sensor (High Byte) Byte #2 Pressure from Vacuum Sensor (Low Byte) Range: -2047.6 to 2047 mbar Format: 1 Bit = 1mbar (signed Hex) Reserved : $00 (For Tesla ESP 2.0)	$00 - $FF		

3.3.5.19. Identifier $FD04 – Controller Status Data Identifier

This identifier allows reading information about the current controller status.

Byte	Bit	Description	Value + Unit	LSB	Offset
1		Response Service Id = [Read Data By Identifier]	$62		
2..3		Identifier = [ControllerStatusDataIdentifier]	$FD04		
4	0	ABS Controller Status	$00 = deactivated $01 = activated		
4	1	TCS Controller Status	$00 = deactivated $01 = activated		
4	2	ESP Controller Status	$00 = deactivated $01 = activated		
4	3	EBD Controller Status	$00 = deactivated $01 = activated		
4	4-7	reserved			

© This document is the exclusive property of Robert Bosch GmbH. Without their consent it may not be reproduced or given to third parties.
If printed this is a uncontrolled document. The user must verify it is an authorized edition prior to use.

3.3.5.20. Identifier $FD05 – EVP Data (Not For Tesla ESP 2.0)

This identifier allows reading information about the EVP cycle counts and runtime.

Byte	Bit	Description	Value + Unit	LSB	Offset
1		Response Service Id = [Read Data By Identifier]	$62		
2..3		Identifier = [EVPData]	$FD05		
4 - 7		EVP runtime Byte #1 EVP Runtime (High Byte) Byte #2 EVP Runtime Byte #3 EVP Runtime Byte #4 EVP Runtime (Low Byte)	$00 00 00 00 - $FF FF FF FF Min value Physical: 0 [s] Max value Physical: 72.000.000 [s] (20000 [h]) Min value numerical: 0 Max value numerical: 3.600.000.000 Internal resolution: 0,02 [s] / bit		
8 - 11		EVP cycle counts Byte #1 EVP Cycle counts (High Byte) Byte #2 EVP Cycle counts Byte #3 EVP Cycle counts Byte #4 EVP Cycle counts (Low Byte)	$00 00 00 00 - $FF FF FF FF Min Physical: 0 Max Physical: 20.000.000 Min value numerical: 0 Max value Physical: 20.000.000 Internal resolution: 1		

3.3.5.21. Identifier $FD06 – Read TCS Configuration Data Identifier

This identifier allows reading information about the currently configured Traction Control System.

Byte	Bit	Description	Value + Unit	LSB	Offset
1		Response Service Id = [Read Data By Identifier]	$62		
2..3		Identifier = [ReadTCSConfigurationDataIdentifier]	$FD06		
4	0 1..7	TCS Configuration Reserved	0 = Bosch TCS, 1 = Tesla TCS 0		

3.3.5.22. Identifier $0101 – Read Component and Firmware Type

This identifier allows reading information about Component and Firmware Type.

Byte	Bit	Description	Value + Unit	LSB	Offset
1		Response Service Id = [Read Data By Identifier]	$62		
2..3		Identifier = [ReadTCSConfigurationDataIdentifier]	$0101		
4		Unused / Reserved	$FF		
5		Firmware Type	$00 = Application		
6		Bootloader Protocol Version	$05		

© This document is the exclusive property of Robert Bosch GmbH. Without their consent it may not be reproduced or given to third parties.
If printed this is a uncontrolled document. The user must verify it is an authorized edition prior to use.

3.3.5.23. Identifier $F196 – Read ECU Serial Number

This identifier allows reading information about ECU Serial Number.

Byte	Bit	Description	Value + Unit	LSB	Offset
1		Response Service Id = [Read Data By Identifier]	$62		
2..3		Identifier = [ReadECUSerialNumber]	$F196		
4		Fixed Leading for "("	$28 (ASCII)		
5		Fixed Leading for "S"	$53 (ASCII)		
6		Fixed Leading for ")"	$29 (ASCII)		
7 8 9		ECU Plant Code Byte #1 Plant Code (High Byte) Byte #2 Plant Code Byte #3 Plant Code (Low Byte	$00-$FF(ASCII)		
10 11		ECU Production Line Byte #1 ECU Production Line (High Byte) Byte #2 ECU Production Line (Low Byte)	$00-$FF(ASCII)		
12 13		ECU Production Year Byte #1 Year (High Byte) Byte #2 Year (Low Byte)	$00-$FF(ASCII)		
14 15 16		ECU Build Day Byte #1 Day (High Byte) Byte #2 Day Byte #3 Day (Low Byte)	$00-$FF(ASCII)		
17 18 19 20 21		ECU – Production Counter Byte #1 ECU Production Counter (High Byte) Byte #2 ECU Production Counter Byte #3 ECU Production Counter Byte #4 ECU Production Counter Byte #5 ECU Production Counter (Low Byte)	$00-$FF(ASCII)		

EEPROM data is protected by checksum algorithms. If the EEPROM data is corrupted or empty all values will be return as 0x30.

3.3.5.24. Identifier $F200 – Alert Message Activation Status

This identifier allows reading information about current activation status of Alert Messages.

Byte	Bit	Description	Value + Unit	LSB	Offset
1		Response Service Id = [Read Data By Identifier]	$62		
2..3		Identifier = [AlertMessageActivationStatus]	$F200		
4	0	Alert DTC Matrix message (ESP_dtcMatrix)	0 = Enabled (Default) 1 = Disabled		
	1	Alert Log Message (ESP_alertLog)	0 = Enabled (Default) 1 = Disabled		
	2..7	Reserved	0		

© This document is the exclusive property of Robert Bosch GmbH. Without their consent it may not be reproduced or given to third parties.
If printed this is a uncontrolled document. The user must verify it is an authorized edition prior to use.

3.3.6. Service $28 – Communication Control

3.3.6.1. Description

The purpose of this service is to switch on/ off the transmission of ECU messages (e.g. application communication messages)

The ECU is enabling the transmission of CAN-messages when switching the ECU to the Default Session (by Service Start Default Diagnostic Session, ECU Reset or P3-Timeout)

3.3.6.2. Availability

Supported Diagnostic Sessions		Default Session
	X	Extended Diagnostic Session
Supported Addressing Modes	**X**	Physical
	X	Functional

3.3.6.3. Request Message

Byte	Bit	Description	Value + Unit	LSB	Offset
1		Request Service Id = [CommunicationControl]	$28		
2	0-6 7	Subfunction *Control Type* [00h] = EnableRxAndEnableTx [01h] = EnableRxAndDisableTx Suppress Positive Response Message Indication Bit [00h] = ECU is sending a positive response message [01h] = ECU is not sending a positive response message			
3	0 1-7	*Communication Type* Normal Communication Messages [01h]= Disable normal communication message with control type (Byte2) equal to [00h] [01h]= Enable normal communication message with control type (Byte2) equal to [01h] Reserved (set to zero)			

3.3.6.4. Response Message

Byte	Bit	Description	Value + Unit	LSB	Offset
1		Response Service Id = [Write Data By Identifier]	$68		
2		Control Type	$xx		

3.3.6.5. Negative Response Codes

Value	Description
$12	Subfunction not supported
$13	Incorrect Message Length
$31	Request Out Of Range
$7F	Service Not Supported in Active Session

© This document is the exclusive property of Robert Bosch GmbH. Without their consent it may not be reproduced or given to third parties.
If printed this is a uncontrolled document. The user must verify it is an authorized edition prior to use.

3.3.7. Service $2E – Write Data By Identifier

3.3.7.1. Description

This service allows the diagnostic tool to write data records into the ECU identified by Record Data Identifiers. The client request message contains one 2-byte Data Identifier values that identifies the requested Data Record.

3.3.7.2. Availability

Supported Diagnostic Sessions		Default Session
	X	Extended Diagnostic Session
Supported Addressing Modes	X	Physical
		Functional

3.3.7.3. Request Message

Refer to the subsection for each identifier for further details.

3.3.7.4. Response Message

Byte	Bit	Description	Value + Unit	LSB	Offset
1		Response Service Id = [Write Data By Identifier]	$6E		
2..3		Identifier	$xxxx		

3.3.7.5. Negative Response Codes

Value	Description
$13	Incorrect Message Length
$22	Conditions not correct (Error by writing into EEPROM)
$31	Request Out Of Range
$78	Request Correctly Received – Response Pending

3.3.7.6. Identifier $FD05 – EVP Life Time Coding (Not For Tesla ESP 2.0)

This identifier writes the EVP (electric vacuum pump) life time data from the EEPROM. Refer to service ID $22 for reading the data of this identifier. A range of 8 bytes of EEPROM is reserved, which allows storing the life time data coding in HEX format.

Byte	Bit	Description	Value + Unit	LSB	Offset
1		Request Service Id = [Write Data By Identifier]	$2E		
2..3		Identifier = [EVPLifeTimeCoding]	$FD05		
4..7		Byte 4: Electric Vacuum Pump Run Time (High Byte) ... Byte 7: Electric Vacuum Pump Run Time (Low byte)	1 Bit → 20 [ms]		

© This document is the exclusive property of Robert Bosch GmbH. Without their consent it may not be reproduced or given to third parties.
If printed this is a uncontrolled document. The user must verify it is an authorized edition prior to use.

8..11		Byte 8: Electric Vacuum Pump Cycle counter (High Byte) ... Byte 11: Electric Vacuum Pump Cycle counter (Low Byte)	1 Bit -> 1 Cycle		

Hint: to reset the pump life time data set the run time and the working cycle counter to zero. A negative response "Out of Range" ($31) is set in case the set values are bigger than the limit values: 1,000 Hours for the EVP run time (in hex format 0xD693A400) and 20xE6 cycles (in hex format 0x1312D00).

3.3.7.7. Identifier $F212 – Vehicle Performance Configuration

This identifier writes the vehicle performance into the EEPROM. The configured vehicle performance is received by the ESP over the CAN bus (CAN signal *GTW_performanceConfig*). Refer to service ID $22 for reading the value of this identifier ($F212). A range of 1 byte of EEPROM is reserved, which allows storing the vehicle performance. The application SW (ASW) uses this value for selecting the parameters for the brake and dynamical controllers according with the configured vehicle.

Byte	Bit	Description	Value + Unit	LSB	Offset
1		Request Service Id = [Write Data By Identifier]	$2E		
2..3		Identifier = [VehiclePerformanceConfiguration]	$F212		

Hint: Note that there is no extra parameters in the diagnostic request just the identifier $F212. By using the $F212 write-command the diagnostics SW will save the received *GTW_performanceConfig* into the EEPROM. Additionally it is important to mention that it will be saved into EEPROM only a valid received performance value. Valid values are:

- *GTW_performanceConfig: 0x01 → 4WDVehicle,*
- *GTW_performanceConfig: 0x02 → 2WD Vehicle*

If an invalid value or no value is received and the write-command $F212 is requested, then the diagnostic SW sends negative response *"$22 Conditions not correct"*.

In order a new vehicle configuration in the ESP is activated it is required a cycle ignition.

3.3.7.8. Identifier $F200 – Alert Message Activation Status

This identifier allows, enabling/disabling the transmission of Alert Messages (ESP_alertLog and ESP_dtcMatrix) for the current Ignition Cycle.

Byte	Bit	Description	Value + Unit	LSB	Offset
1		Response Service Id = [Read Data By Identifier]	$62		
2..3		Identifier = [AlertMessageActivationStatus]	$F200		
4	0	Alert DTC Matrix message (ESP_dtcMatrix)	0 = Enabled (Default) 1 = Disabled		
	1	Alert Log Message (ESP_alertLog)	0 = Enabled (Default) 1 = Disabled		
	2..7	Reserved	0		

© This document is the exclusive property of Robert Bosch GmbH. Without their consent it may not be reproduced or given to third parties.
If printed this is a uncontrolled document. The user must verify it is an authorized edition prior to use.

3.3.8. Service $2F – Input Output Control By Identifier

3.3.8.1. Description

The service Input Output Control By Local Identifier is used by the diagnostic tool to substitute a value for an input signal and / or control an output (actuator) of the ECU.

3.3.8.2. Availability

Supported Diagnostic Sessions		Default Session
	X	Extended Diagnostic Session
Supported Addressing Modes	**X**	Physical
		Functional

3.3.8.3. Request Message

Refer to the subsection for each identifier for further details.

3.3.8.4. Negative Response Codes

Value	Description
$13	Incorrect Message Length
$31	Request Out Of Range
$7F	Service Not Supported in Active Session

3.3.8.5. Control Type 00h – Return Control To ECU

3.3.8.5.1. Positive Response Message

Byte	Bit	Description	Value + Unit
1		Positive Response Service Id = [Input Output Control By Identifier]	$6F
2 3		Data Identifier Byte #1 Data Identifier High Byte Byte #2 Data Identifier Low Byte	$00-FF $00-FF
4		Input Output: ***Control Type***: [00]: [Return Control To ECU] [03]: Short term adjustment	$00

© This document is the exclusive property of Robert Bosch GmbH. Without their consent it may not be reproduced or given to third parties.
If printed this is a uncontrolled document. The user must verify it is an authorized edition prior to use.

3.3.8.5.2. Identifier D00Dh - Electrical Vacuum Pump (Not For Tesla ESP 2.0)

Byte	Bit	Description	Coding	Hex
1		Request Service Id = [Input Output Control By Identifier]	Hex	2F
		Data Identifier = [Electrical Vacuum Pump]	Hex	
2		Byte #1 Data Identifier High Byte		D0
3		Byte #2 Data Identifier Low Byte		0D
4		Input Output Control Type = [Return Control To ECU]	Hex	00

3.3.8.6. Control Type 03h – Short Term Adjustment

3.3.8.6.1. Positive Response Message

Byte	Bit	Description	Value + Unit
1		Positive Response Service Id = [Input Output Control By Identifier]	$6F
		Data Identifier	
2		Byte #1 Data Identifier High Byte	$00-FF
3		Byte #2 Data Identifier Low Byte	$00-FF
4		Input Output Control Type = [Short Term Adjustment]	$03

3.3.8.6.2. Identifier D00Dh - Electrical Vacuum Pump (Not For Tesla ESP 2.0)

Byte	Bit	Description	Coding	Hex
1		Request Service Id = [Input Output Control By Identifier]	Hex	2F
		Data Identifier = [Electrical Vacuum Pump]	Hex	
2		Byte #1 Data Identifier High Byte		D0
3		Byte #2 Data Identifier Low Byte		0D
4		Input Output Control Type = [Short Term Adjustment]	Hex	03
5	0	Electrical Vacuum Pump: [00h] = disable [01h] = enable	Hex	00-01
	1-7	Reserved (set to zero)		

© This document is the exclusive property of Robert Bosch GmbH. Without their consent it may not be reproduced or given to third parties.
If printed this is a uncontrolled document. The user must verify it is an authorized edition prior to use.

3.3.9. Service $31 – Routine Control

3.3.9.1. Description

The Routine Control service is used by a diagnostic tool to start a routine, to stop a routine and to request the routine results.

Note that the actual description of the end-of-line testing, evacuation/filling and repair bleeding sequences are described in separate documents, provided by CC/ESU1.

3.3.9.2. Availability

Supported Diagnostic Sessions		Default Session
	X	Extended Diagnostic Session
Supported Addressing Modes	**X**	Physical
	P	Partly Functional (see Routine Description)

3.3.9.3. Request Message

Refer to the sub-sections for each routine control type and identifier for details.

Sub-Function	Description
$01	Start a routine
$02	Stop a routine
$03	Get the result or state of a routine

Following routines are supported for the TESLA S model.

Routine ID	Description
$F000	Evac and Fill
$F001	Repair bleed
$F002	Wheel speed sensor test
$F003	Static test
$F00A	Actuator test
$F150	Roller test bench
$0404	VIN storage
$F102	VIN reset
$F100	Ax Sensor Calibration
$F103	SAS Calibration
$FF05	Control Failsafe Reactions

3.3.9.4. Response Message

Refer to the sub-sections for each routine control type and identifier for details.

3.3.9.5. Negative Response Codes

Value	Description
$12	Sub Function Not Supported
$13	Incorrect Message Length
$22	Conditions Not Correct
$24	Request Sequence Error

© This document is the exclusive property of Robert Bosch GmbH. Without their consent it may not be reproduced or given to third parties.
If printed this is a uncontrolled document. The user must verify it is an authorized edition prior to use.

$31	Request Out Of Range
$78	Request Correctly Received – Response Pending

3.3.9.6. Routine Control Type $01 – Start Routine

3.3.9.6.1. Response Message

Byte	Bit	Description	Value + Unit	LSB	Offset
1		Response Service Id = [Routine Control]	$71		
2		Sub Function = [Start Routine]	$01		
3..4		Routine Identifier	$xxxx		
5		Routine Status Byte	$01 = start successful $02 = already started $03 = start not possible *Following states are only used if no RequestRoutineResult identifier is supported:* $04 = finished $05 = routine error		

3.3.9.6.2. Identifier $F000 – Evac And Fill

Byte	Bit	Description	Value + Unit	LSB	Offset
1		Request Service Id = [Routine Control]	$31		
2	0..6	Sub Function = [Start Routine]	$01		
	7	Suppress Positive Response Bit	0 = ECU is sending a positive response 1 = ECU is not sending a positive response		
3..4		Routine Identifier = [EvacAndFill]	$F000		
5		Evac and fill time Format: 1 Bit = 1s (unsigned Hex) Range: 1s … 150s (01h ... 96h)	$01-$96	1	0
6		Time until start of pump motor Resolution: 1 Bit = 1s (unsigned Hex) Range:: [01h ... FEh] = 1 … 254s [00h] = 1s [FFh] = “Pump motor is not running”	$00-$FF	1	0

Evac and fill time

After evac and filling time, the pump motor will run for 2 additional seconds, if the delay time in byte 6 is not $FF.

3.3.9.6.3. Identifier $F001 – Repair Bleed

Byte	Bit	Description	Value + Unit	LSB	Offset
1		Request Service Id = [Routine Control]	$31		
2	0..6	Sub Function = [Start Routine]	$01		
	7	Suppress Positive Response Bit	0 = ECU is sending a positive response		

© This document is the exclusive property of Robert Bosch GmbH. Without their consent it may not be reproduced or given to third parties.
If printed this is a uncontrolled document. The user must verify it is an authorized edition prior to use.

Byte	Bit	Description	Value + Unit	LSB	Offset
			1 = ECU is not sending a positive response		
3..4		Routine Identifier = [RepairBleed]	$F001		
5		Repair bleeding phase [01h] = EOL Repair Bleeding Phase 1 [02h] = EOL Repair Bleeding Phase 2 [03h] = EOL Repair Bleeding Phase 3 [04h] = EOL Repair Bleeding Phase 4	1 .. 4		
6		Repetition counter [03h] = 3 repetitions [04h] = 4 repetitions [05h] = 5 repetitions This Parameter is always required, but only valid for Phase 3, 4	3 .. 5		

Repair bleeding phase
The Repair Bleeding function should always be executed in increasing phase sequence starting with Phase 1. A repetition of the same phase is allowed, but no phase shall be skipped. If this is not assured, the pump might be damaged due to dry run.

Repetition counter
This parameter defines the number of inner loop repetitions in phase 3 and 4. This Parameter is always required, but only valid for Phase 3, 4. For other phases, it is ignored.

3.3.9.6.4. Identifier $F002 – Wheel Speed Sensor Test

The “Wheel Speed Sensor Test” is used to check the correct connection, correlation and function of the wheel speed sensors as well as a damaged multi pole wheel. A wrong air gap or eccentricity will also be detected. The test can be executed for both acceleration and deceleration. No valve or pump actuation is performed.

The “Wheel Speed Sensor Test” requires a brake dynamometer with the possibility to actuate each wheel on the test bench. The test duration is set to 10 [s]. At the beginning, the vehicle is at standstill in a low speed dynamometer. The test bench accelerates one wheel or more of the vehicle to a minimum speed.

The wheel speed sensor test routine is started and the ECU samples the maximum positive difference in speed of all sensors during the given test duration [10s]. *VStopp* (Byte 5 and 6) indicates a maximal speed value in case of acceleration phase was selected (Byte 7) or a minimal value in case of deceleration. At least one wheel speed should be greater/lesser than the specified stop speed.

Byte	Bit	Description	Value + Unit	LSB	Offset
1		Request Service Id = [Routine Control]	$31		
2	0..6	Sub Function = [Start Routine]	$01		
	7	Suppress Positive Response Bit	0 = ECU is sending a positive response 1 = ECU is not sending a positive response		
3..4		Routine Identifier = [WheelSpeedSensorTest]	$F002		
5 .. 6		*VStopp* Format 1 Bit = 0,01km/h (Unsigned Hex)	$00-$FF	0,01 km/h	0

© This document is the exclusive property of Robert Bosch GmbH. Without their consent it may not be reproduced or given to third parties.
If printed this is a uncontrolled document. The user must verify it is an authorized edition prior to use.

Byte	Bit	Description	Value + Unit	LSB	Offset
		Range: 0km/h ... 655,35km/h (theoretically) [0000h ... FFFFh]			
7		*Testing Phase* Format [00h] = Deceleration; [01h] = Acceleration	$00-$01		

3.3.9.6.5. Identifier $F003 – Static Test

Byte	Bit	Description	Value + Unit	LSB	Offset
1		Request Service Id = [Routine Control]	$31		
2	0..6	Sub Function = [Start Routine]	$01		
	7	Suppress Positive Response Bit	0 = ECU is sending a positive response 1 = ECU is not sending a positive response		
3..4		Routine Identifier = [StaticTest]	$F003		

3.3.9.6.6. Identifier $F00A – Actuator Test

The Actuator Test will be used to check the hydraulic connections, the tightness and correlation of the valves, the function of the pump and the air in the brake system. This test controls up to 4 actuators according to the actuation pattern shown below.

The actuator value must have a value between 0 – 100%. Values above this range are not accepted and test will not be executed (Negative response with value $31 "*RequestOutofRange*"). The execution time is limited to 5.46 [min] or a hex value of 0x7FFF

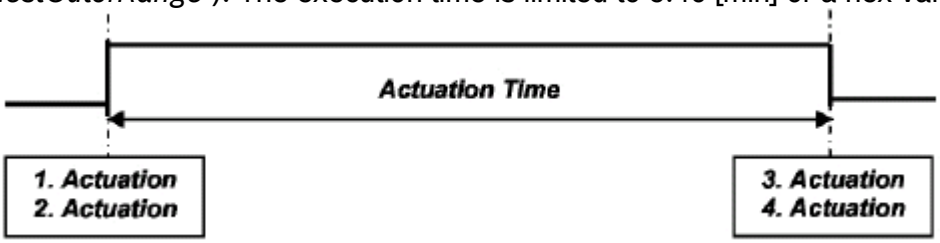

© This document is the exclusive property of Robert Bosch GmbH. Without their consent it may not be reproduced or given to third parties.
If printed this is a uncontrolled document. The user must verify it is an authorized edition prior to use.

Byte	Bit	Description	Coding	Hex Val
1		Request Service Id = [Routine Control]		31
2		Sub Function Routine Control Type [01h] = Start Routine		01
		Routine Identifier = [Actuator Test]		
3		Byte #1 Routine Identifier High Byte	Hex	F0
4		Byte #2 Routine Identifier Low Byte	Hex	0A
		Actuation 1		
5		Byte #1 Actuator 1 Value High Byte	Hex	00-00
6		Byte #2 Actuator 1 Value Low Byte	Hex	00-64
7		Byte #3 Actuator 1 Identifier High Byte	Hex	00-FF
8		Byte #4 Actuator 1 Identifier Low Byte	Hex	00-FF
		Actuation 2		
9		Byte #1 Actuator 2 Value High Byte	Hex	00-00
10		Byte #2 Actuator 2 Value Low Byte	Hex	00-64
11		Byte #3 Actuator 2 Identifier High Byte	Hex	00-FF
12		Byte #4 Actuator 2 Identifier Low Byte	Hex	00-FF
		Actuation Time		
13		Byte #1 Actuation Time High Byte	Hex	00-FF
14		Byte #2 Actuation Time Low Byte	Hex	00-FF
		Format 1 Bit = 10 ms (Unsigned Hex)		
		Range: 10 ms ... 327,67 s [0001h ... 7FFFh] other values are undefined!		
		Actuation 3		
15		Byte #1 Actuator 3 Value High Byte	Hex	00-00
16		Byte #2 Actuator 3 Value Low Byte	Hex	00-64
17		Byte #3 Actuator 3 Identifier High Byte	Hex	00-FF
18		Byte #4 Actuator 3 Identifier Low Byte	Hex	00-FF
		Actuation 4		
19		Byte #1 Actuator 4 Value High Byte	Hex	00-00
20		Byte #2 Actuator 4 Value Low Byte	Hex	00-64
21		Byte #3 Actuator 4 Identifier High Byte	Hex	00-FF
22		Byte #4 Actuator 4 Identifier Low Byte	Hex	00-FF

To find the actuator list with the corresponding actuator identifiers see the "*actuator table*" in section 3.6

3.3.9.6.7. Identifier $F150 – Roller Test Bench (DynoMode)

With this routine the systems changes to roller test modus (*Dyno Mode*) and a test of a vehicle in a roller bench is possible. While the Roller Test Bench is active, the ESP system will react as described in the TESLA specification "Stability Control Firmware Specification" version 09/07/2011. Implemented requirements are S-VE-ECU-157 to S-VE-ECU-167.

Byte	Bit	Description	Value + Unit	LSB	Offset
1		Request Service Id = [Routine Control]	$31		
2	0..6	Sub Function = [Start Routine]	$01		
	7	Suppress Positive Response Bit	0 = ECU is sending a positive response 1 = ECU is not sending a positive response		
3..4		Routine Identifier = [RollerTestBench]	$F150		

© This document is the exclusive property of Robert Bosch GmbH. Without their consent it may not be reproduced or given to third parties.
If printed this is a uncontrolled document. The user must verify it is an authorized edition prior to use.

3.3.9.6.8. Identifier $0404 – VIN Storage Routine

By starting this routine a received VIN will be written into the EEPROM. To store the VIN certain conditions must be filled like a valid VIN has to been received and no VIN was previously stored. The routine response will deliver the result of storing the VIN. This routine reacts as described in the TESLA specification "20140606_Electronic Stability Control Specification.pd" version 20140606. Implemented requirements are ReqID: 115628 to ReqID: 115638.

Byte	Bit	Description	Value + Unit	LSB	Offset
1		Request Service Id = [Routine Control]	$31		
2	0..6	Sub Function = [Start Routine]	$01		
	7	Suppress Positive Response Bit	0 = ECU is sending a positive response 1 = ECU is not sending a positive response		
3..4		Routine Identifier = [VINStorageRoutine]	$0404		

3.3.9.6.8.1. Positive Response for Routine Identifier $0404

Byte	Bit	Description	Value + Unit	LSB	Offset
1		Request Service Id = [Routine Control]	$71		
2		Sub Function = [Start Routine]	$01		
3..4		Routine Identifier = [RollerTestBench]	$0404		
5		Routine state result: 00: Routine Passed - VIN Stored 01: Specified VIN (From Car Configuration) Already Stored 02: Different VIN (From Car Configuration) Already Stored 03: Invalid VIN Received From Car Configuration 04: Test Timed Out Or Stopped Before VIN Received 05: Internal Storage Problem (e.g. EEPROM error) FE: No fail Reason Available Or Unspecified Fail Reason	$xx		

3.3.9.6.9. Identifier $F102– Reset VIN

Reset VIN will set all the VIN data values to 0x00.

Byte	Bit	Description	Value + Unit	LSB	Offset
1		Request Service Id = [Routine Control]	$31		
2	0..6	Sub Function = [Start Routine]	$01		
	7	Suppress Positive Response Bit	0 = ECU is sending a positive response 1 = ECU is not sending a positive response		
3..4		Routine Identifier = [VINResetRoutine]	$F102		

3.3.9.6.10. Identifier $F100 – Ax Sensor Calibration

This routine must be performed with the vehicle on a level ground.

© This document is the exclusive property of Robert Bosch GmbH. Without their consent it may not be reproduced or given to third parties.
If printed this is a uncontrolled document. The user must verify it is an authorized edition prior to use.

This routine takes the serial number from the Ax sensor via CAN and stores it to EEPROM. It also takes the Ax value on CAN and stores it to EEPROM. A flag is also set to trigger a reset of long term compensation by the algorithm software, which is also done immediately.
A positive response indicates that an attempt has been made for the above actions.
After running this routine, a clear DTC request must be initiated in the next ignition cycle to remove any previous DTC relating to serial number mismatch or invalid offset.
If DTCs still remain, the routine was not successful due to problems with the Ax sensor or EEPROM (based on the actual DTC).

Byte	Bit	Description	Value + Unit	LSB	Offset
1		Request Service Id = [Routine Control]	$31		
2	0..6	Sub Function = [Start Routine]	$01		
	7	Suppress Positive Response Bit	0 = ECU is sending a positive response 1 = ECU is not sending a positive response		
3..4		Routine Identifier = AxSensorCalibration]	$F100		
5	0 1 2..7	Data byte: Routine Parameter Reserved (set to zero) Calibrate AX Sensor [01h] = Yes Reserved (set to zero)	$02		

3.3.9.6.11. Identifier $F103 – SAS Calibration

With this routine SAS Offset in EEPROM (LTC-long-term compensation) can be reset.

Byte	Bit	Description	Value + Unit	LSB	Offset
1		Request Service Id = [Routine Control]	$31		
2	0..6	Sub Function = [Start Routine]	$01		
	7	Suppress Positive Response Bit	0 = ECU is sending a positive response 1 = ECU is not sending a positive response		
3..4		Routine Identifier = [SAS Calibration]	$F103		

3.3.9.6.12. Identifier $FF05 – Control Failsafe Reactions

- Routine is supported in functional addressing mode also
- This routine provides no functionality.

Byte	Bit	Description	Value + Unit	LSB	Offset
1		Request Service Id = [Routine Control]	$31		
2	0..6	Sub Function = [Start Routine]	$01		
	7	Suppress Positive Response Bit	0 = ECU is sending a positive response 1 = ECU is not sending a positive response		
3..4		Routine Identifier = [Control Failsafe Reactions]	$FF05		
5		Fail Safe Reaction : [00h] Range: [01h…FFh] not defined	$00		

© This document is the exclusive property of Robert Bosch GmbH. Without their consent it may not be reproduced or given to third parties.
If printed this is a uncontrolled document. The user must verify it is an authorized edition prior to use.

3.3.9.7. Routine Control Type $02 – Stop Routine

3.3.9.7.1. Request Message

Byte	Bit	Description	Value + Unit	LSB	Offset
1		Request Service Id = [Routine Control]	$31		
2	0..6	Sub Function = [Start Routine]	$02		
	7	Suppress Positive Response Bit	0 = ECU is sending a positive response 1 = ECU is not sending a positive response		
3..4		Routine Identifier	$F000 = EvacFill $F001 = RepairBleed $F002 = WSSTest $F003 = StaticTest $F00A = ActuatorTest $F150 = Roller Bench $FF05 = Control Fail Safe Reactions		

3.3.9.7.2. Response Message

Byte	Bit	Description	Value + Unit	LSB	Offset
1		Response Service Id = [Routine Control]	$71		
2		Sub Function = [Start Routine]	$02		
3..4		Routine Identifier	$xxxx		
5		Routine Status Byte	$01 = stop successful $02 = already stopped or not started $03 = routine stopped abnormally $04 = incorrect routine identifier		

© This document is the exclusive property of Robert Bosch GmbH. Without their consent it may not be reproduced or given to third parties.
If printed this is a uncontrolled document. The user must verify it is an authorized edition prior to use.

3.3.9.8. Routine Control Type $03 – Request Routine Results

3.3.9.8.1. Request Message

Byte	Bit	Description	Value + Unit	LSB	Offset
1		Request Service Id = [Routine Control]	$31		
2	0..6	Sub Function = [RoutineResult]	$03		
	7	Suppress Positive Response Bit	0 = ECU is sending a positive response 1 = ECU is not sending a positive response		
3..4		Routine Identifier	$xxxx		

3.3.9.8.2. Identifier $F000 – Evac And Fill

Byte	Bit	Description	Value + Unit	LSB	Offset
1		Response Service Id = [Routine Control]	$71		
2		Sub Function = [RoutineResult]	$03		
3..4		Routine Identifier = [EvacAndFill]	$F000		
5		Routine Status Byte	01 = finished 02 = still running 03 = Routine canceled by ECU 04 = Routine Identifier not correct 05 = Routine cancelled by Tester 06 = Routine was not started		

3.3.9.8.3. Identifier $F001 – Repair Bleed

Byte	Bit	Description	Value + Unit	LSB	Offset
1		Response Service Id = [Routine Control]	$71		
2		Sub Function = [RoutineResult]	$03		
3..4		Routine Identifier = [RepairBleed]	$F001		
5		Routine Status Byte	01 = finished 02 = still running 03 = Routine canceled by ECU 04 = Routine Identifier not correct 05 = Routine cancelled by Tester 06 = Routine was not started		

© This document is the exclusive property of Robert Bosch GmbH. Without their consent it may not be reproduced or given to third parties.
If printed this is a uncontrolled document. The user must verify it is an authorized edition prior to use.

3.3.9.8.4. Identifier $F002 – Wheel Speed Sensor Test

Byte	Bit	Description	Value + Unit
1		Response Service Id = [Routine Control]	$71
2		Sub Function = [RoutineResult]	$03
3..4		Routine Identifier = [WheelSpeedSensorTest]	$F002
5		Routine Status Byte	01 = finished 02 = still running 03 = Routine canceled by ECU 04 = Routine Identifier not correct 05 = Routine cancelled by Tester 06 = Routine was not started
6 .. 7		Vst FL (measured start speed) Byte #1 High Byte Byte #2 Low Byte Format 1 Bit = 0,01km/h (Unsigned Hex) Range: 0km/h ... 655,35km/h (theoretically)[0000h ... FFFFh] Wheel Speed Front Left, maximum	00-FFFF
8 .. 9		Vst FR (measured start speed) Byte #1 High Byte Byte #2 Low Byte Format 1 Bit = 0,01km/h (Unsigned Hex) Range: 0km/h ... 655,35km/h (theoretically)[0000h ... FFFFh] Wheel Speed Front Left, minimum	00-FFFF
10 .. 11		Vst RL (measured start speed) Byte #1 High Byte Byte #2 Low Byte Format 1 Bit = 0,01km/h (Unsigned Hex) Range: 0km/h ... 655,35km/h (theoretically)[0000h ... FFFFh] Wheel Speed Front Right, maximum	00-FFFF
12 .. 13		Vst RR (measured start speed) Byte #1 High Byte Byte #2 Low Byte Format 1 Bit = 0,01km/h (Unsigned Hex) Range: 0km/h ... 655,35km/h (theoretically)[0000h ... FFFFh]Wheel Speed Front Right, minimum	00-FFFF
14 .. 15		dV FL (max positive difference speed) Byte #1 High Byte Byte #2 Low Byte Format 1 Bit = 0,01km/h (Unsigned Hex) Range: 0km/h ... 655,35km/h (theoretically)[0000h ... FFFFh] Wheel Speed Rear Left, maximum	00-FFFF
16 .. 17		dV FR (max positive difference speed) Byte #1 High Byte Byte #2 Low Byte Format 1 Bit = 0,01km/h (Unsigned Hex) Range: 0km/h ... 655,35km/h (theoretically)[0000h ... FFFFh Wheel Speed Rear Left, minimum	00-FFFF
18 .. 19		dV RL (max positive difference speed) Byte #1 High Byte Byte #2 Low Byte Format 1 Bit = 0,01km/h (Unsigned Hex) Range: 0km/h ... 655,35km/h (theoretically)[0000h ... FFFFh] Wheel Speed Rear Right, maximum	00-FFFF
20 .. 21		dV RR (max positive difference speed) Byte #1 High Byte	00-FFFF

© This document is the exclusive property of Robert Bosch GmbH. Without their consent it may not be reproduced or given to third parties.
If printed this is a uncontrolled document. The user must verify it is an authorized edition prior to use.

		Byte #2 Low Byte Format 1 Bit = 0,01km/h (Unsigned Hex) Range: 0km/h ... 655,35km/h (theoretically)[0000h ... FFFFh] Wheel Speed Rear Right, minimum	
22		Wheel FL (Air Gap Monitoring) Air Gap Indication FL Range: [FEh] No Air Gap Information from WSS	$FE
23		Wheel FR (Air Gap Monitoring) Air Gap Indication FR Range: [FEh] No Air Gap Information from WSS	$FE
24		Wheel RL (Air Gap Monitoring) Air Gap Indication RL Range: [FEh] No Air Gap Information from WSS	$FE
25		Wheel RR (Air Gap Monitoring) Air Gap Indication RR Range: [FEh] No Air Gap Information from WSS	$FE

© This document is the exclusive property of Robert Bosch GmbH. Without their consent it may not be reproduced or given to third parties.
If printed this is a uncontrolled document. The user must verify it is an authorized edition prior to use.

3.3.9.8.5. Identifier $F003 – Static Test

Byte	Bit	Description	Value + Unit	LSB	Offset
1		Response Service Id = [Routine Control]	$71		
2		Sub Function = [RoutineResult]	$03		
3..4		Routine Identifier = [DynamicTest]	$F003		
5		Routine Status Byte	01 = finished 02 = still running 03 = Routine canceled by ECU 04 = Routine Identifier not correct 05 = Routine cancelled by Tester 06 = Routine was not started		

3.3.9.8.6. Identifier $F00A – Actuator Test

Byte	Bit	Description	Value + Unit	LSB	Offset
1		Response Service Id = [Routine Control]	$71		
2		Sub Function = [RoutineResult]	$03		
3..4		Routine Identifier = [ActuatorTest]	$F00A		
5		Routine Status Byte	01 = finished 02 = still running 03 = Routine canceled by ECU 04 = Routine Identifier not correct 05 = Routine cancelled by Tester 06 = Routine was not started		

3.3.9.8.7. Identifier $F150 – Roller Test Bench

Byte	Bit	Description	Value + Unit	LSB	Offset
1		Response Service Id = [Routine Control]	$71		
2		Sub Function = [RoutineResult]	$03		
3..4		Routine Identifier = [ActuatorTest]	$F150		
5		Routine Status Byte	01 = Test Bench Modus (Dyno Mode) active 06 = Test Bench Modus (Dyno Mode) not activate		

3.3.9.8.8. Identifier $F100 – Ax Sensor Calibration

Byte	Bit	Description	Value + Unit	LSB	Offset
1		Response Service Id = [Routine Control]	$71		

© This document is the exclusive property of Robert Bosch GmbH. Without their consent it may not be reproduced or given to third parties.
If printed this is a uncontrolled document. The user must verify it is an authorized edition prior to use.

2		Sub Function = [RoutineResult]	$03		
3..4		Routine Identifier = [ActuatorTest]	$F100		
5		Routine Status Byte	01 = finished 02 = still running 03 = Routine canceled by ECU 04 = Routine Identifier not correct 06 = Routine was not started		

3.3.9.8.9. Identifier $F103 – SAS Calibration

Byte	Bit	Description	Value + Unit	LSB	Offset
1		Response Service Id = [Routine Control]	$71		
2		Sub Function = [RoutineResult]	$03		
3..4		Routine Identifier = [ActuatorTest]	$F103		
5		Routine Status Byte	01 = finished 02 = still running 03 = Routine canceled by ECU 04 = Routine Identifier not correct 06 = Routine was not started		

© This document is the exclusive property of Robert Bosch GmbH. Without their consent it may not be reproduced or given to third parties.
If printed this is a uncontrolled document. The user must verify it is an authorized edition prior to use.

3.3.10. Service $3E – Tester Present

3.3.10.1. Description

This service is used to indicate to an ECU that the diagnostic tool is still connected to the vehicle and that diagnostic sessions are to remain active.

3.3.10.2. Availability

Supported Diagnostic Sessions	**X**	Default Session
	X	Extended Diagnostic Session
Supported Addressing Modes	**X**	Physical
	X	Functional

3.3.10.3. Request Message

Byte	Bit	Description	Value + Unit	LSB	Offset
1		Request Service Id = [Tester Present]	$3E		
2	0..6	Sub Function = [Zero Sub Function]	$00		
	7	Suppress Positive Response Bit	0 = ECU is sending a positive response 1 = ECU is not sending a positive response		

3.3.10.4. Response Message

Byte	Bit	Description	Value + Unit	LSB	Offset
1		Response Service Id = [Tester Present]	$7E		
2		Sub Function = [Zero Sub Function]	$00		

3.3.10.5. Negative Response Codes

Value	Description
$12	Sub Function Not Supported
$13	Incorrect Message Length

© This document is the exclusive property of Robert Bosch GmbH. Without their consent it may not be reproduced or given to third parties.
If printed this is a uncontrolled document. The user must verify it is an authorized edition prior to use.

3.3.11. Service $7F - Negative Response

3.3.11.1. Description

This section does not describe a diagnostic service itself, but provides additional details about the used negative response codes.

3.3.11.2. Response Message

Byte	Bit	Description	Value + Unit	LSB	Offset
1		Response Service Id = [Negative Response]	$7F		
2		Request Service ID	$xx		
3		Negative Response Code	$xx		

3.3.11.3. Negative Response Codes

Negative Response Codes	
11h	**Service Not Supported** This response code indicates that the requested action will not be taken because the ECU does not support the requested service
12h	**Sub Function Not Supported** This response code indicates that the requested action will not be taken because the ECU does not support the requested sub function
13h	**Incorrect Message Length or Invalid Format** This response code indicates that the requested action will not be taken because the length of the received request message is incorrect
22h	**Conditions Not Correct** This response code indicates that the requested action will not be taken, because conditions are not correct or a time-out has appeared.
24h	**Request Sequence Error** This response code indicates that the requested action will not be taken because the server expects a different sequence of request messages or message to that sent by the client. This may occur when sequence-sensitive requests are issued in the wrong order.
31h	**Request Out Of Range** This response code indicates that the requested action will not be taken because the request has incorrect parameters
78h	**Request Correctly Received – Response Pending** This response code indicates, that the request message was received correctly and that all parameters in the request message are valid, but the request cannot be completed within P2_CAN_ECU_max. (e.g. Access of EEPROM data)
7Fh	**Service Not Supported in Active Session** This response code indicates that the requested action will not be taken because the ECU does not support the requested service in the current session.

© This document is the exclusive property of Robert Bosch GmbH. Without their consent it may not be reproduced or given to third parties.
If printed this is a uncontrolled document. The user must verify it is an authorized edition prior to use.

3.3.12. Service $85 – Control DTC Setting

3.3.12.1. Description

The ControlDTCSetting service is used by a diagnostic tool to stop or resume the setting of diagnostic trouble codes (DTC) in the ECU.

The ECU is enabling again the storage of DTCs when switching the ECU to default session (by Service Start Default Diagnostic Session, a reset of the ECU Reset or a P3-Timeout).

3.3.12.2. Availability

Supported Diagnostic Sessions		Default Session
	X	Extended Diagnostic Session
Supported Addressing Modes	**X**	Physical
	x	Functional

3.3.12.3. Request Message

Byte	Bit	Description	Value + Unit	LSB	Offset
1		Request Service Id = [Control DTC Setting]	$85		
2	0..6	Sub Function = [DTC Setting Type]	$01 = on $02 = off		
	7	Suppress Positive Response Bit	0 = ECU is sending a positive response 1 = ECU is not sending a positive response		

3.3.12.4. Response Message

Byte	Bit	Description	Value + Unit	LSB	Offset
1		Response Service Id = [Control DTC Setting]	$C5		
2		Sub Function = [DTC Setting Type]	$xx		

3.3.12.5. Negative Response Codes

Value	Description
$12	Sub function not supported
$13	Incorrect Message Length

© This document is the exclusive property of Robert Bosch GmbH. Without their consent it may not be reproduced or given to third parties.
If printed this is a uncontrolled document. The user must verify it is an authorized edition prior to use.

3.4. Application: End-Of-Line Routines

Note that the actual description of the end-of-line testing, evacuation/filling and repair bleeding sequences are described in separate documents, provided by CC/ESU1.

3.4.1. Actuator Table

The following table lists the available actuator identifiers for service $31. In particular, they are relevant for the dynamic test.

Control numbers		Actuator digital/analog output		
Dez.	Hex	Channel	Typ	Resolution/Remark
0	**0000H**	no actuation		Dummy actuation for padding unused actuations
34	**0022H**	pump-motor relay (RFP)	Digital	Actuation pump-motor: 0064H = turn-on 00H = turn-off
48	**0030H**	EV front left (EVL)	Analog	ABS Valves front left (in/outlet) Actuation 0064H = turn-on 0000H = turn-off
50	**0032H**	AV front left (AVL)	Analog	
52	**0034H**	EV front right (EVR)	Analog	ABS Valves front right (in/outlet) Actuation 0064H = turn-on 0000H = turn-off
54	**0036H**	AV front right (AVR)	Analog	
56	**0038H**	EV rear right (EHR)	Analog	ABS Valves rear right (in/outlet) Actuation 0064H = turn-on 0000H = turn-off
58	**003AH**	AV rear right (AHR)	Analog	
60	**003CH**	EV rear left (EHL)	Analog	ABS Valves rear left (in/outlet) Actuation 0064H = turn-on 0000H = turn-off
62	**003EH**	AV rear left (AHL)	Analog	
78	**004EH**	Cut Valve 1 (USV1)	Analog	USV Valves Actuation 0064H = turn-on 0000H = turn-off
80	**0050H**	Cut Valve 2 (USV2)	Analog	
82	**0052H**	High pressure control valve 1 (HSV1)	Analog	HSV Valves Actuation 0064H = turn-on 0000H = turn-off
84	**0054H**	High pressure control valve 2 (HSV2)	Analog	
98	**0062H**	Disable Valve Overheating Protection	Digital	ECU internal Valve Overheating Protection: 0000H = protection on 00FFH = protection off
100	**0064H**	DisableVRShutdown	Digital	Valve Relay shutdown: 0000H = VR shutdown not disabled (strategy enabled) 00ABH = VR shutdown prohibited (strategy VR shutdown disabled)
104	**0068H**	Disable VLimit	Digital	Speed limit monitoring during diagnosis mode: 0000H = turn-off speed monitoring 0001H = turn-on speed monitoring

© This document is the exclusive property of Robert Bosch GmbH. Without their consent it may not be reproduced or given to third parties.
If printed this is a uncontrolled document. The user must verify it is an authorized edition prior to use.

3.4.2. Actuation Limitations

Valves and pump motor are covered by protection measures to avoid destruction due to excessive actuation. In case the protection measures are triggered, a fault entry is stored in the fault memory to document the overheat situation.

Protections measures can be disabled by usage of actuator 0062h. Actuation of valves or pump with disabled protection measures may damage the brake system due to excess temperature or excess pressure conditions. Valves and pump motor are covered by protection measures to avoid destruction due to excessive actuation. In case the protection measures are triggered, a fault entry is stored in the fault memory to document the overheat situation.

Too short actuations of the pump motor shall be avoided. The minimum allowed control duration for the actuator “Pump Motor” is 20ms.

© This document is the exclusive property of Robert Bosch GmbH. Without their consent it may not be reproduced or given to third parties.
If printed this is a uncontrolled document. The user must verify it is an authorized edition prior to use.

3.5. Application: Fault Memory

3.5.1. Diagnostic Trouble Codes

The DTC coding information is according to the format ISO14229-1DTCFormat, meaning there is no standardized decoding defined - instead the DTCs are defined as specified by the vehicle manufacturer.

The DTC code consists of 3 bytes. Middle and lower byte are used to determine the affected part of the system..

DTC Code (High Byte)	DTC Code (Middle Byte)	DTC Code (Low Byte)
Three byte hexadecimal number indicating the affected part of the system. DTC Failure Type Byte, containing DTC Failure Category and DTC Failure Subtype.		

The following table describes the middle and low byte of the DTC Code. The values have been chosen for the Chassis Group between $4xxxxx and $Cxxxxx.

© This document is the exclusive property of Robert Bosch GmbH. Without their consent it may not be reproduced or given to third parties.
If printed this is a uncontrolled document. The user must verify it is an authorized edition prior to use.

DTC (Hex value) (High, Middle and Low Byte)	DTC Short Description
0x00C44A86	Invalid Data Received From Gateway D: Invalid Signal Status
0x00C44A82	Invalid Data Received From Gateway D: Alive Counter invalid
0x00C44A81	Invalid Data Received From Gateway D: Data Length Code, Checksum or Parity invalid
0x00C44986	Invalid Data Received From Gateway C: Invalid Signal Status
0x00C44981	Invalid Data Received From Gateway C: Data Length Code, Checksum or Parity invalid
0x00C44881	Invalid Data Received From Gateway B: Data Length Code, Checksum or Parity invalid
0x00C44782	Invalid Data Received From Gateway A: Alive Counter invalid
0x00C44781	Invalid Data Received From Gateway A: Data Length Code, Checksum or Parity invalid
0x00C43286	Invalid Data Received From Multi-axis Acceleration Sensor Module: Invalid Signal Status
0x00C43281	Invalid Data Received From Multi-axis Acceleration Sensor Module: Data Length Code, Checksum or Parity invalid
0x00C42886	Invalid Data Received From Steering Angle Sensor Module: Invalid Signal Status
0x00C42882	Invalid Data Received From Steering Angle Sensor Module: Alive Counter invalid
0x00C42881	Invalid Data Received From Steering Angle Sensor Module: Data Length Code, Checksum or Parity invalid
0x00C42281	Invalid Data Received From Body Control Module: Data Length Code, Checksum or Parity invalid
0x00C41886	Invalid Data Received From Brake Booster iBooster : Invalid Signal Status,
0x00C41882	Invalid Data Received Brake Booster: Alive Counter invalid
0x00C41881	Invalid Data Received From Brake Booster: Data Length Code, Checksum or Parity invalid
0x00C41781	Invalid Data Received From Park Brake Control Module: Data Length Code, Checksum or Parity invalid
0x00C41186	Invalid Data Received From Drive Motor Control Module A: Invalid Signal Status
0x00C41182	Invalid Data Received From Drive Motor Control Module A: Alive Counter invalid
0x00C41181	Invalid Data Received From Drive Motor Control Module A: Data Length Code, Checksum or Parity invalid
0x00C14987	Lost Communication With Gateway D: Message Timeout
0x00C14887	Lost Communication With Gateway C: Message Timeout
0x00C14787	Lost Communication With Gateway B: Message Timeout

© This document is the exclusive property of Robert Bosch GmbH. Without their consent it may not be reproduced or given to third parties.
If printed this is a uncontrolled document. The user must verify it is an authorized edition prior to use.

0x00C14687	Lost Communication With Gateway A: Message Timeout
0x00C14087	Lost Communication With Body Control Module: Message Timeout
0x00C12987	Lost Communication With Brake Booster -iBooster: Message Timeout
0x00C12887	Lost Communication With Park Brake Control Module: Message Timeout
0x00C12687	Lost Communication With Steering Angle Sensor Module: Message Timeout
0x00C12587	Lost Communication With Multi-axis Acceleration Sensor Module: Message Timeout
0x00C11087	Lost Communication With Drive Motor Control Module A: Message Timeout
0x00B03700	Vehicle Communication Bus B: General Fault
0x00B02800	Vehicle Communication Bus A: General Fault
0x00530068	Roller Bench Mode: Control Event Log
0x00522087	VIN-Message not received from Gateway
0x00522081	Invalid Data Received From Gateway (VIN-Message): Data Length Code, Checksum or Parity invalid
0x00522062	VIN: Received VIN does not match stored VIN
0x00522051	VIN not programmed
0x00521062	Reverse Gear Switch: Plausibility against second signal failed
0x00520086	Variant Management: Invalid Signal Status
0x00513068	HBA Controller: Control Event Log
0x00512068	ESP Controller: Control Event Log
0x00511068	TCS Controller: Control Event Log
0x00510068	ABS Controller: Control Event Log
0x00407268	Brake Temperature Too High Algorithm Based Failure or BTM overheat warning is deactivated- information
0x00406C68	Stability System: Too long initialization of reference speed calculation-info
0x00406C49	Stability System: Internal Electronic failure detected
0x00406C46	ESP Cal Block Mismatch (ESP vs Calibration) GTW_espPlatCalMismatch received 1
0x00406C42	Stability System: Memory (ROM, EEPROM or RAM) fault
0x00406C17	Stability System: Circuit voltage above threshold
0x00406C16	Stability System: Circuit Voltage below threshold

© This document is the exclusive property of Robert Bosch GmbH. Without their consent it may not be reproduced or given to third parties.
If printed this is a uncontrolled document. The user must verify it is an authorized edition prior to use.

0x00406B62	Stability System Active Too Long: Plausibility against second signal failed
0x00406362	Yaw Rate Sensor: Plausibility against second signal failed
0x00406309	Yaw Rate Sensor: Generic Component fault
0x00406262	Longitudinal Acceleration Sensor: Plausibility against second signal failed
0x00406228	Longitudinal Acceleration Sensor: Adjustment not possible (Offset too large)
0x00406222	Longitudinal Acceleration Sensor: Signal out of Range
0x00406209	Longitudinal Acceleration Sensor: Generic Component fault
0x00406162	Lateral Acceleration Sensor: Plausibility against second signal failed
0x00406128	Lateral Acceleration Sensor: Adjustment not possible (Offset too large)
0x00406122	Lateral Acceleration Sensor: Signal out of Range
0x00406109	Lateral Acceleration Sensor: Generic Component fault
0x00405162	Steering Wheel Position Sensor: Plausibility against second signal failed
0x00405128	Steering Wheel Position Sensor: Adjustment not possible (Offset too large)
0x00405126	Steering Wheel Position Sensor: Constant signal detected
0x0040497B	Brake Fluid: Fluid level low
0x00404462	Brake Pressure Sensor A: Plausibility against second signal failed
0x00404428	Brake Pressure Sensor A: Adjustment not possible (Offset too large)
0x00404414	Brake Pressure Sensor A: Line Short to Ground or Interruption
0x00404062	Brake Pedal Switch A: Plausibility against second signal failed
0x00404029	Brake Pedal Switch A: Invalid Signal
0x00404024	Brake Pedal Switch A: Signal stuck high
0x00403D00	Wheel Speed Sensor: General Fault
0x00403B12	Right Rear Wheel Speed Sensor Supply: Line Short to UBat
0x00403B11	Right Rear Wheel Speed Sensor Supply: Line Short to Gnd
0x00403A78	Right Rear Wheel Speed Sensor: Wss fault due to Alignment or adjustment incorrect. Bad Airgap, wheel vibrations or wrongly mounted Wss sensor
0x00403A76	Right Rear Wheel Speed Sensor: Wrong mounting position
0x00403A62	Right Rear Wheel Speed Sensor: Plausibility against second signal failed

© This document is the exclusive property of Robert Bosch GmbH. Without their consent it may not be reproduced or given to third parties.
If printed this is a uncontrolled document. The user must verify it is an authorized edition prior to use.

0x00403A4A	Right Rear Wheel Speed Sensor: Wrong Component detected
0x00403A31	Right Rear Wheel Speed Sensor: Wss fault due to missing wheel speed signal.
0x00403A22	Right Rear Wheel Speed Sensor: Signal out of Range
0x00403A14	Right Rear Wheel Speed Sensor: Line Short to Ground or Interruption
0x00403A12	Right Rear Wheel Speed Sensor: Line Short to UBat
0x00403A11	Right Rear Wheel Speed Sensor: Line Short to Gnd
0x00403812	Left Rear Wheel Speed Sensor Supply: Line Short to UBat
0x00403811	Left Rear Wheel Speed Sensor Supply: Line Short to Gnd
0x00403778	Left Rear Wheel Speed Sensor: Wss fault due to Alignment or adjustment incorrect. Bad Airgap, wheel vibrations or wrongly mounted Wss sensor
0x00403776	Left Rear Wheel Speed Sensor: Wrong mounting position
0x00403762	Left Rear Wheel Speed Sensor: Plausibility against second signal failed
0x0040374A	Left Rear Wheel Speed Sensor: Wrong Component detected
0x00403731	Left Rear Wheel Speed Sensor: Wss fault due to missing wheel speed signal.
0x00403722	Left Rear Wheel Speed Sensor: Signal out of Range
0x00403714	Left Rear Wheel Speed Sensor: Line Short to Ground or Interruption
0x00403712	Left Rear Wheel Speed Sensor: Line Short to UBat
0x00403711	Left Rear Wheel Speed Sensor: Line Short to Gnd
0x00403512	Right Front Wheel Speed Sensor Supply: Line Short to UBat
0x00403511	Right Front Wheel Speed Sensor Supply: Line Short to Gnd
0x00403478	Right Front Wheel Speed Sensor: Wss fault due to Alignment or adjustment incorrect. Bad Airgap, wheel vibrations or wrongly mounted Wss sensor
0x00403476	Right Front Wheel Speed Sensor: Wrong mounting position
0x00403462	Right Front Wheel Speed Sensor: Plausibility against second signal failed
0x0040344A	Right Front Wheel Speed Sensor: Wrong Component detected
0x00403431	Right Front Wheel Speed Sensor: Wss fault due to missing wheel speed signal.
0x00403422	Right Front Wheel Speed Sensor: Signal out of Range
0x00403414	Right Front Wheel Speed Sensor: Line Short to Ground or Interruption

© This document is the exclusive property of Robert Bosch GmbH. Without their consent it may not be reproduced or given to third parties.
If printed this is a uncontrolled document. The user must verify it is an authorized edition prior to use.

0x00403412	Right Front Wheel Speed Sensor: Line Short to UBat
0x00403411	Right Front Wheel Speed Sensor: Line Short to Gnd
0x00403212	Left Front Wheel Speed Sensor Supply: Line Short to UBat
0x00403211	Left Front Wheel Speed Sensor Supply: Line Short to Gnd
0x00403178	Left Front Wheel Speed Sensor: Wss fault due to Alignment or adjustment incorrect. Bad Airgap, wheel vibrations or wrongly mounted Wss sensor
0x00403176	Left Front Wheel Speed Sensor: Wrong mounting position
0x00403162	Left Front Wheel Speed Sensor: Plausibility against second signal failed
0x0040314A	Left Front Wheel Speed Sensor: Wrong Component detected
0x00403131	Left Front Wheel Speed Sensor: Wss fault due to missing wheel speed signal.
0x00403122	Left Front Wheel Speed Sensor: Signal out of Range
0x00403114	Left Front Wheel Speed Sensor: Line Short to Ground or Interruption
0x00403112	Left Front Wheel Speed Sensor: Line Short to UBat
0x00403111	Left Front Wheel Speed Sensor: Line Short to Gnd
0x00402009	ABS Pump Motor Control: Generic Component fault

© This document is the exclusive property of Robert Bosch GmbH. Without their consent it may not be reproduced or given to third parties.
If printed this is a uncontrolled document. The user must verify it is an authorized edition prior to use.