# *Diagnosis Functional Description*

# *ABS/ESP-System*

Protocol: ***UDS*** (ISO 14229-1)
Communication Bus: ***CAN***



© This document is the exclusive property of Robert Bosch GmbH. Without their consent it may not be reproduced or given to third parties.
If printed this is a uncontrolled document. The user must verify it is an authorized edition prior to use.

# History

Corrections of misspelling are excluded from the following list:

| Ver. | Date | Editor | Chapter | Description of changes |
|---|---|---|---|---|
| 01 | 2010-07-29 | L.Franzitta | New edition | -- |
| 02 | 2011-02-09 | L.Franzitta | all | Overall update |
| 03 | 2011-02-11 | L.Franzitta | 3.3.5 | Updated DIDs to make them UDS conform |
| 04 | 2011-03-03 | L.Franzitta | 3.1.5<br><br>3.3.9<br>3.3.8<br><br>3.3.5 | CAN identifier for response and receive messages<br>Removed routine for activation of EVP<br>Included Service IOCBI for EVP activation<br>Updated DIDs to include EVP data |
| 05 | 2011-03-25 | L.Franzitta | 3.3.9 | Corrected routine id for Actuator Test |
| 06 | 2011-08-10 | L.Franzitta | 3.3.5 | Added LID 0xFD05 for EVP data |
| 07 | 2012-01-24 | S. Vargas | 3.1, 3.2.4, 3.3.5, 3.3.7.6, 3.3.9, 3.4.1, 3.5.1 | Parameters for communication establish (section 3.1)<br>Service 19: Monitor-ID to freeze frame data added<br>Service 22: $F1A0 for reading VIN added<br>Service 2E: $FD05 for writing EVP lifetime data added.<br>Service 31: 0x0068 ID for disabling speed limit monitoring added<br>Service 31: routines for VIN store $0404, VIN reset $F102, Roller Test Bench $F150 added. Removed routine for calibration of Ax Sensor<br>DTC list updated |
| 08 | 2012-03-01 | S. Vargas | 3.3.3, 3.3.7.6, 3.3.5.16, 3.5.1 | Supported sessions for Service $14 updated<br>Conditions for writing EVP coding life time added<br>In identifier $FD02 description of state valve relay corrected<br>DTC List updated |
| 09 | 2012-04-13 | S. Vargas | 3.3.5.14,<br>3.3.5.10,<br>3.3.7.7<br>3.5.1 | Service 22: $F212 for reading vehicle performance added. $F191 content changed.<br>Service 2E: $F212 for writing vehicle performance added.<br>DTC list updated |



© This document is the exclusive property of Robert Bosch GmbH. Without their consent it may not be reproduced or given to third parties.
If printed this is a uncontrolled document. The user must verify it is an authorized edition prior to use.

# Table of Contents

**1. SHORT DESCRIPTION OF DIAGNOSTIC COMMUNICATION ..... 4**

**2. CONTEXT INFORMATION ..... 5**

2.1. OPERATIONAL ENVIRONMENT ..... 5
2.2. USE CASES ..... 5
2.3. REFERENCED DOCUMENTS ..... 6
*2.3.1. International Documents ..... 6*

**3. REQUIREMENTS ..... 7**

3.1. TRANSPORT PROTOCOL: CAN ..... 7
*3.1.1. Data Stream ..... 7*
*3.1.2. Message Types ..... 8*
*3.1.3. Addressing Types ..... 10*
*3.1.4. CAN Communication Failures ..... 11*
*3.1.5. CAN Identifier ..... 11*
*3.1.6. CAN Timing Parameters ..... 11*
3.2. COMMUNICATION MANAGER ..... 13
*3.2.1. Session Handling ..... 13*
*3.2.2. Concurrent Tester Present ("Keep Alive" Logic) ..... 13*
*3.2.3. Suppress Positive Response Bit ..... 13*
*3.2.4. Speed Limit ..... 13*
3.3. APPLICATION: DIAGNOSTIC SERVICES ..... 15
*3.3.1. Service $10 - DiagnosticSessionControl ..... 15*
*3.3.2. Service $11 - ECUReset ..... 17*
*3.3.3. Service $14 - ClearDiagnosticInformation ..... 18*
*3.3.4. Service $19 - ReadDTCInformation ..... 19*
*3.3.5. Service $22 - ReadDataByIdentifier ..... 26*
*3.3.6. Service $28 – Communication Control ..... 33*
*3.3.7. Service $2E – WriteDataByIdentifier ..... 35*
*3.3.8. Service $2F – Input Output Control By Identifier ..... 37*
*3.3.9. Service $31 – RoutineControl ..... 39*
*3.3.10. Service $3E - TesterPresent ..... 49*
*3.3.11. Service $7F - Negative Response ..... 50*
*3.3.12. Service $85 - ControlDTCSetting ..... 51*
3.4. APPLICATION: END-OF-LINE ROUTINES ..... 52
*3.4.1. Actuator Table ..... 52*
*3.4.2. Actuation Limitations ..... 53*
3.5. APPLICATION: FAULT MEMORY ..... 53
*3.5.1. Diagnostic Trouble Codes ..... 53*



© This document is the exclusive property of Robert Bosch GmbH. Without their consent it may not be reproduced or given to third parties.
If printed this is a uncontrolled document. The user must verify it is an authorized edition prior to use.

# 1. Short Description of Diagnostic Communication

Diagnostic communication provides the capability of quickly accessing information and functions of the control unit via external tester tools. Diagnostic communication provides services to:

- Identify the ECU
- Read input signals of the ECU
- Read input signals
- Write output signals to the actuators
- Read ECU-internal information (e.g. contents of the fault memory)

Diagnostic communication can be used for end-of-line testing or in the servicing workshop. The testing time can be reduced substantially by using the services provided by diagnosis.

This document describes the diagnostic communication functions and specifications of the diagnostic Session. The Flash Reprogramming Session is described in a separate document.



© This document is the exclusive property of Robert Bosch GmbH. Without their consent it may not be reproduced or given to third parties.
If printed this is a uncontrolled document. The user must verify it is an authorized edition prior to use.

# 2. Context Information

## 2.1. Operational Environment

Within a vehicle, normally several ECUs exist. The ECUs share a common diagnostic bus: several ECUs are connected to this bus and an additional connector allows an external tester tool to be connected to the vehicle. This connector is known as the OBD (On Board Diagnosis) connector:

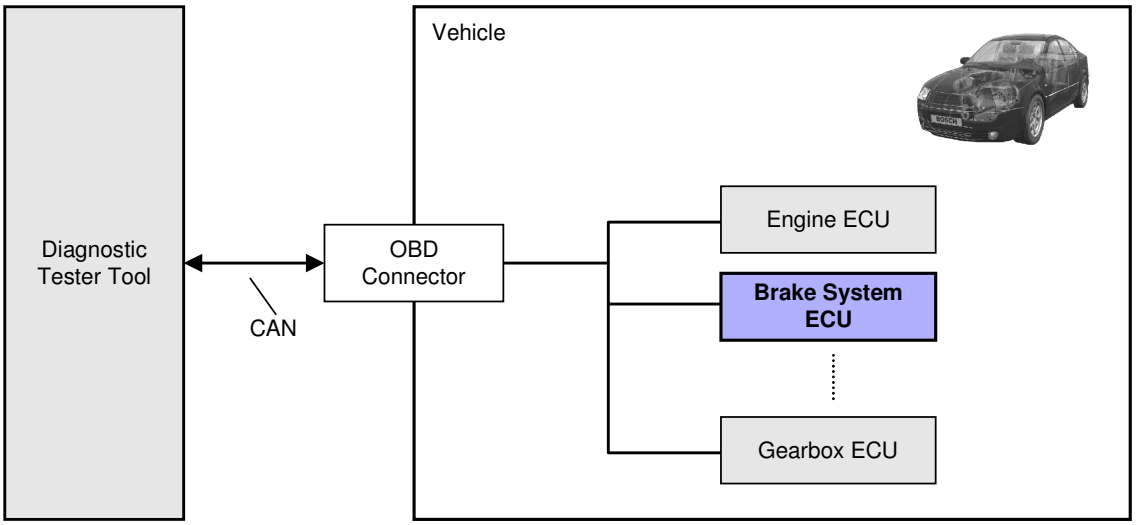


## 2.2. Use Cases

The Diagnostic Tester Tool can be a production facility in the vehicle production plant or a tool that is used in the repair shop. These tester tools send diagnostic requests to the ECUs in the vehicle and evaluate the responses. As the brake system ECU is also part of the vehicle, all Bosch brake system ECU's support a diagnosis communication interface to transfer information from an ECU to an off-board tester and vice-versa.

The information transferred consists of ECU fault information, signal reporting, control routines, calibration values and many other types of data used either in performing ECU diagnostics, re-programming or any other data transfer not associated with normal node to node communication.

The diagnostic communication (DCOM) part of the software is described in the following sub-chapters: its main task is to maintain correct communication between tester tools and the brake system ECU.



© This document is the exclusive property of Robert Bosch GmbH. Without their consent it may not be reproduced or given to third parties.
If printed this is a uncontrolled document. The user must verify it is an authorized edition prior to use.

## 2.3. Referenced Documents

### 2.3.1. International Documents

The general requirements of the diagnosis communication protocol are based on ISO requirements, specified in the following documents:

- ISO 14229-1: Road Vehicles - Unified Diagnostic Services (UDS)
- ISO 15765-2: Road Vehicles - Diagnostics on CAN: Network Layer Services



© This document is the exclusive property of Robert Bosch GmbH. Without their consent it may not be reproduced or given to third parties.
If printed this is a uncontrolled document. The user must verify it is an authorized edition prior to use.

# 3. Requirements

## 3.1. Transport Protocol: CAN

### 3.1.1. Data Stream

The ECU supports CAN diagnostic messages using the Unacknowledged Segmented Data Transfer (USDT) mechanism as specified in ISO 15765-2. Accordingly the following two types of CAN data streams are supported:

#### 3.1.1.1. Non-Segmented Data Stream

A non-segmented data stream consists of a Single Frame (SF). Non-segmented data stream are used for messages with a maximum data length of 7 data bytes in case of normal addressing.

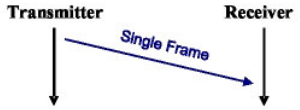


#### 3.1.1.2. Segmented Data Stream

A segmented data stream consists of multiple frames of segmented CAN messages. A segmented data stream must be used if the maximum data length exceeds 7 data bytes in case of normal addressing.

The data stream comprises a First Frame (FF) and a number of Consecutive Frames (CF) containing the subsequent data bytes, following the First Frame. The receiver has to send a Flow Control (FC) after reception of the First Frame.

The Flow Control contains information regarding Block Size and the Separation Time. The Block Size (BS) is the maximum number of Consecutive Frames the receiver allows the sender to send, before waiting for an authorisation (Additional Flow Control Frames) from the receiver to continue transmission. The Separation Time (Stmin) is the (minimum) time the sender has to wait between transmissions of two consecutive frames.



© This document is the exclusive property of Robert Bosch GmbH. Without their consent it may not be reproduced or given to third parties.
If printed this is a uncontrolled document. The user must verify it is an authorized edition prior to use.

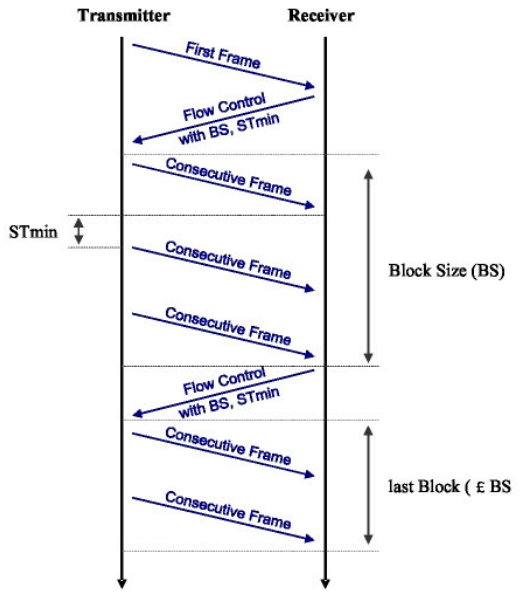


.

### *3.1.2. Message Types*

Each Single Frame (SF), First Frame (FF), Consecutive Frame (CF) or Flow Control (FC) has an 8-byte Data Field (DLC of CAN message is set to 8) consisting of the following parts:
•Protocol Control Information (PCI)
indicates the frame type, number of frames, data length etc
•Transmission data (Data)
contains data to be sent

| Data Field Structure | | | | | |
|---|---|---|---|---|---|
| **Frame Type** | **Byte 1** | | **Byte 2** | **Byte 3** | **Byte 4 – 8** |
| | **Bit 7- 4** | **Bit 3 – 0** | | | |
| Single Frame (SF) | Type_SF = 0000B | SF_DL | DB 1 | DB 2 | DB 3 – 7 |
| First Frame (FF) | Type_FF = 0001B | FF_DL | | DB 1 | DB 2 – 6 |
| Consecutive Frame (CF) | Type_CF = 0010B | SN | DB $x_1$ | DB $x_2$ | DB $x_3$-$x_7$ |
| Flow Control (FC) | Type_FC = 0011B | FS | BS | Stmin | N/A |

*SF_DL: 4 Bit Single Frame Data length*
*FF_DL: 12 Bit First Frame Data length*
*SN: Sequence Number*
*FS: Status of data stream*
*BS: Block Size*
*Stmin: Minimum Separation Time*
DB: Data Byte


© This document is the exclusive property of Robert Bosch GmbH. Without their consent it may not be reproduced or given to third parties.
If printed this is a uncontrolled document. The user must verify it is an authorized edition prior to use.

### 3.1.2.1. Single Frame

A Single Frame message type is used for data messages with a maximum data length of 7 data bytes. The PCI Type 0000B identifies a Single Frame. The Single Frame data length SF_DL is defined as:

**Single Frame Data Length (SF_DL):**

| Hex Value | Description |
|---|---|
| 0h – 7h | Single Frame Data length (SF_DL) contains number of data Bytes |

### 3.1.2.2. First Frame

Messages longer than 7 data bytes are segmented into a First Frame and one or more Consecutive Frames. The PCI Type 0001B identifies a First Frame. The First Frame data length FF_DL is defined as:

**First Frame Data Length (FF_DL):**

| Hex Value | Description of FF_DL |
|---|---|
| 000h – 007h | Reserved |
| 008h – FFFh | First Frame Data length (FF_DL) contains number of data bytes.<br>12 Bit FF_DL theoretically supports sending of up to 4096 data bytes.<br>Note: The ECU supports segmented data messages up to maximally 50 data bytes. |

### 3.1.2.3. Consecutive Frame

Consecutive Frames are following a First Frame. The PCI Type 0010B identifies a Consecutive Frame. The Sequence Number (SN) in the lower nibble of a Consecutive Frame is specified as follows:

- The first Consecutive Frame always starts with Sequence Number 1.
- The Sequence Number is incremented by one for each additional Consecutive Frame.
- The Sequence Number (SN) value is not affected by any Flow Control (FC) frame.
- When the Sequence Number reaches the value of 15, the next Consecutive Frame will be sent with a Sequence Number set to 0.

**Definition of Sequence Number (SN):**

| Protocol Data name | FF | CF | CF | CF | CF | CF | CF | CF | CF |
|---|---|---|---|---|---|---|---|---|---|
| **SN (hex)** | -- | 1 | 2 | ... | E | F | 0 | 1 | ... |

| Hex Value | Description |
|---|---|
| 0h – Fh | Sequence Number (SN)<br>The Sequence Number has a range of 0 to 15. The Sequence Number is stored in the lower 4 bits of Byte 1. |



© This document is the exclusive property of Robert Bosch GmbH. Without their consent it may not be reproduced or given to third parties.
If printed this is a uncontrolled document. The user must verify it is an authorized edition prior to use.

### 3.1.2.4. Flow Control

After the First Frame or the last Consecutive Frame of a block of frames (when further Consecutive Frames are required to complete the data transfer) the receiver must send a Flow Control (FC) frame. The PCI Type 0011B identifies a Flow Control Frame.

The flow control mechanism allows the receiver to inform the sender about the receiver's capabilities. The Flow Control contains information regarding Block Size and the Separation Time. The Block Size (BS) is the maximum number of Consecutive Frames the receiver allows the sender to send, before waiting for an authorisation (Additional Flow Control Frames) from the receiver to continue transmission. The Separation Time (Stmin) is the (minimum) time the sender has to wait between the transmissions of two consecutive frames.

**Flow Status (FS):**

| Hex Value | Description |
|---|---|
| 0h | Continue To Send (CTS)<br>The Receiver is ready and is waiting for maximally BS Consecutive Frames |

**Block Size (Bsmax):**

| Hex Value | Description |
|---|---|
| 00h | Block Size (BS)<br>Indicates that no more Flow Control (FC) frames are allowed during transmission of the segmented data frame. All Consecutive Frames (CF) will be send without any stop for further Flow Control frames. |
| 01h – FFh | Block Size (BS)<br>Defines the maximal amount of Consecutive Frames (CF) that can be received without an intermediate Flow Control (FC) frame. |

**Separation Time (Stmin):**

| Hex Value | Description |
|---|---|
| 00h – FFh | Separation Time (Stmin)<br>The Separation Time defines the minimum allowed time gap (in ms) between the transmission of Consecutive Frames (CF). |

## 3.1.3. Addressing Types

### 3.1.3.1. Physical Address Type

Physical addressing is used for a point-to-point communication between the diagnostic tool and the ECU (1:1 communication).

The diagnostic tool is sending a physically addressed request messages with CAN identifier CANID_REQ_PHYS to the ECU and the ECU will generally send a response message with CAN Identifier CANID_RES_PHYS

**Requirements**

•Physical addressing (1 to 1 communication) is supported for all types of network layer messages.



© This document is the exclusive property of Robert Bosch GmbH. Without their consent it may not be reproduced or given to third parties.
If printed this is a uncontrolled document. The user must verify it is an authorized edition prior to use.

### 3.1.3.2. Functional Address Type

Functional addressing is used for broadcast communication between the diagnostic tool and all connected ECUs (1:n communication).

The diagnostic tool is sending a functionally addressed request messages with CAN identifier CANID_REQ_FUNC to all ECU's and each ECU is sending a response message with the CAN Identifier CANID_RES_PHYS

**Requirements**

•Functional addressing (1 to n communication) is only supported for Single Frame communication. The ECU is ignoring all other functional addressed frames (e.g. a First Frame).

## 3.1.4. CAN Communication Failures

### 3.1.4.1. Unexpected Messages

As a general rule, the arrival of an unexpected message or a message with illegal format from any node will be ignored.

### 3.1.4.2. Missing Messages

If the ECU is detecting a communication failure (e.g. timing violations of the Network Layer) during a diagnostic tool request, the ECU discards the request and no response will be sent.

## 3.1.5. CAN Identifier

| Description | Name | CAN–ID |
|---|---|---|
| CAN Identifier for physical addressed request messages | CANID_REQ_PHYS | **645** |
| CAN Identifier for response messages | CANID_RES_PHYS | **655** |
| CAN Identifier for functional addressed request messages | CANID_REQ_FUNC | **7DF** |

## 3.1.6. CAN Timing Parameters

**Requirements:**

•ECU timings have an accuracy error < +/- 2 ms

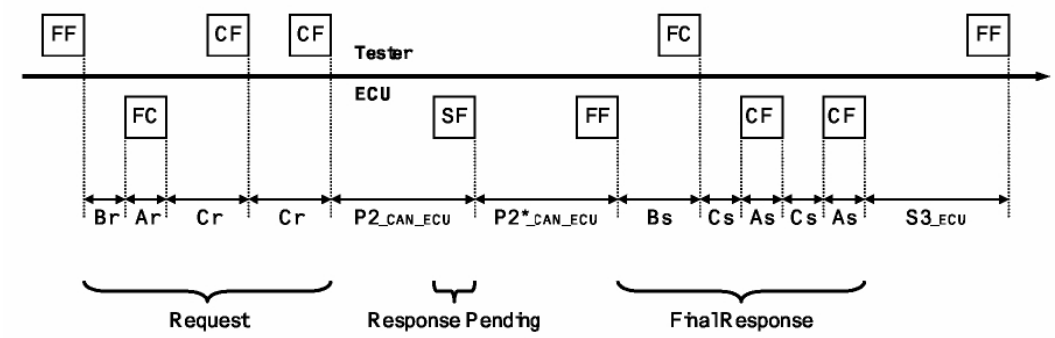




© This document is the exclusive property of Robert Bosch GmbH. Without their consent it may not be reproduced or given to third parties.
If printed this is a uncontrolled document. The user must verify it is an authorized edition prior to use.

### 3.1.6.1. Performance Parameters

| Parameter | Description | Min Value | Max Value |
|---|---|---|---|
| P2_CAN_ECU | Performance requirement for the ECU to start with the response message after the reception of a request message | N/A | 50 |
| P2*_CAN_ECU | Performance requirement for the ECU to start with a further response message after transmission of a negative response message with negative response code 78h (Response Pending) | N/A | 4000 |
| Br | Performance requirement for the ECU to transmit a required Flow Control Frame after reception of a First Frame or Consecutive Frame from Tester | N/A | 20 |
| Cs | Performance requirement for the ECU to transmit a First Consecutive Frame after reception of a Flow Control. Performance requirement for the ECU to transmit a Next Consecutive Frame after Sending of a Consecutive Frame | N/A | 150 |
| P3_CAN_ECU | Minimal Time between response from the ECU and the next request from the tester | 5 ms | N/A |
| Stmin,r | Stmin,r is the timing parameter in the FC sent by a tester to control the transmission rate of CF frames sent by the ECU | 0 ms | 127 ms |
| Stmin,s | Stmin,s is the timing parameter in the FC sent by a ECU to control the transmission rate of CF frames sent by the tester | N/A | 10 |

### 3.1.6.2. Timeout Parameters

| Parameter | Description | Min Value | Max Value |
|---|---|---|---|
| As/Ar | Timeout for a ECU to access a network and to transmit a diagnostic CAN frame | N/A | 1000 |
| Bs | Timeout for a ECU to wait for a Flow Control from the tester after sending a First Frame (or a Next Consecutive Frame) | N/A | 1000 |
| Cr | Timeout for a ECU to wait for a Consecutive Frame after Sending a Flow Control Frame or Receiving a Consecutive Frame | N/A | 800 |
| S3_ECU | Timeout for a ECU wait for any diagnostic request message to keep a diagnostic session other than Default Session active. | N/A | 5000 ms |



© This document is the exclusive property of Robert Bosch GmbH. Without their consent it may not be reproduced or given to third parties.
If printed this is a uncontrolled document. The user must verify it is an authorized edition prior to use.

## 3.2. Communication Manager

### 3.2.1. Session Handling

Any diagnostic session will be active as long as the ECU is powered.

Timeout Monitoring (S3max):
If the ECU is not in the Default Session and not receiving any request from the diagnostic tool for P3_ECU_CAN the ECU will start the Default Session.

### 3.2.2. Concurrent Tester Present ("Keep Alive" Logic)

There is only one diagnostic protocol instance available in the ECU, which can handle only one request at a time. The rule is that any received message (regardless of addressing mode physical or functional) occupies this resource until the request message is processed (with final response sent or application call without response).

There is one exception from this rule: The Keep-Alive-Logic in the ECU. A functionally addressed valid Tester Present message with SPRMIB (Suppress Positive Response Message Indication Bit) = 01h can be processed in parallel.

### 3.2.3. Suppress Positive Response Bit

The Suppress Positive Response Bit is only supported for services which are explicitly specified to be addressed functionally. The Suppress Positive Response bit is then considered for both address types.

The Suppress Positive Response Bit is not supported for services which are not explicitly specified to be addressed functionally. A service with SPRMIB (Suppress Positive Response Message Indication Bit) = 01h is answered with a negative response message with negative response code “sub function not supported”.

Behaviour for Physical Addressing:
•The positive response may be suppressed if the optional Suppress Positive Response Message Indication Bit is set.
•The ECU is always sending a negative response.

Behaviour for Functional Addressing:
•The positive response may be suppressed if the optional Suppress Positive Response Message Indication Bit is set.
•The ECU is always sending a negative response, except for the negative response codes SNS (Service Not Supported), SFNS (Sub Function Not Supported) or ROOR (Request Out Of Range) if the message is addressed functionally.

### 3.2.4. Speed Limit

If the *extendedDiagnosticSession* is active, a speed limit monitoring is active.

The speed limit value is defined to **10** km/h. As soon as this vehicle speed is exceeded, the extendedDiagnosticSession is automatically deactivated.



© This document is the exclusive property of Robert Bosch GmbH. Without their consent it may not be reproduced or given to third parties.
If printed this is a uncontrolled document. The user must verify it is an authorized edition prior to use.

Speed limit monitoring can be deactivated by an actuator number (refer to service ID $31).

Activation of the extendedDiagnosticSession is not allowed if the speed limit is already exceeded if service $10 is received.



© This document is the exclusive property of Robert Bosch GmbH. Without their consent it may not be reproduced or given to third parties.
If printed this is a uncontrolled document. The user must verify it is an authorized edition prior to use.

## 3.3. Application: Diagnostic Services

### 3.3.1. Service $10 - DiagnosticSessionControl

#### 3.3.1.1. Description

The DiagnosticSessionControl service is used to enable different diagnostic sessions in the ECU.

State Transitions

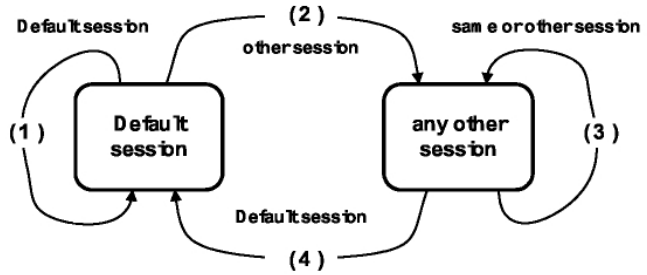


•If a diagnostic session, which is already active is requested by the diagnostic tool, then the ECU is sending a positive response message and performs all initialisation in the same way as if it changed from a different session.

**•Start defaultSession:**
The ECU is initializing the default session. The ECU is resetting all activated settings & controls. This session is active after power on or after an explicit change to defaultSession.

**Start any other session:**
The ECU is (re-) initializing the requested session. The states of Communication Control and Control DTC Setting services are not affected.

#### 3.3.1.2. Availability

| | | |
|---|---|---|
| **Supported Diagnostic Sessions** | **X** | defaultSession |
| | **X** | extendedDiagnosticSession |
| **Supported Addressing Modes** | **X** | physical |
| | **X** | functional |



© This document is the exclusive property of Robert Bosch GmbH. Without their consent it may not be reproduced or given to third parties.
If printed this is a uncontrolled document. The user must verify it is an authorized edition prior to use.

### 3.3.1.3. Request Message

| Byte | Bit | Description | Value + Unit | LSB | Offset |
|---|---|---|---|---|---|
| 1 | | Request Service Id = [Diagnostic Session Control] | $10 | | |
| 2 | 0..6 | Sub Function<br>Diagnostic Session Type | $xx | | |
| | 7 | Suppress Positive Response Bit | 0 = ECU is sending a positive response<br>1 = ECU is not sending a positive response | | |

Diagnostic Session Type
Select the desired diagnostic session. Refer to the subsections below for additional details.

| Value | Description |
|---|---|
| $01 | defaultSession |
| $02 | Reprogramming Session |
| $03 | extendedDiagnosticSession |

### 3.3.1.4. Response Message

| Byte | Bit | Description | Value + Unit | LSB | Offset |
|---|---|---|---|---|---|
| 1 | | Response Service Id = [Diagnostic Session Control] | $50 | | |
| 2 | | Diagnostic Session Type | $xx | | |
| 3..4 | | P2_CAN_ECU_max | 0 .. 65535 ms | 1 | 0 |
| 5..6 | | P2*_CAN_ECU_max | 0 .. 655350 ms | 10 | 0 |

### 3.3.1.5. Negative Response Codes

| Value | Description |
|---|---|
| $12 | Sub Function Not Supported |
| $13 | Incorrect Message Length |
| $22 | Conditions Not Correct |
| $78 | Request Correctly Received – Response Pending |

### 3.3.1.6. Subfunction $01 - defaultSession

The ECU starts in the defaultSession when powered up.
The defaultSession has no influence on controller functionality.

### 3.3.1.7. Subfunction $02 – Reprogramming Session

The ECU will always send a Negative Response with response code Response Pending (78h) to start the Reprogramming Session in order to fulfil P2_CAN_ECU CAN timing specifications.

According to UDS in this case also a Final Positive Response Message has to be send. (The Suppress Positive Response Bit will not be considered).



© This document is the exclusive property of Robert Bosch GmbH. Without their consent it may not be reproduced or given to third parties.
If printed this is a uncontrolled document. The user must verify it is an authorized edition prior to use.

The ECU Flash Reprogramming Session is safety protected and will only be started if the following requirements are met:

- No controller intervention (ABS, ASR, FZR, HOLD).
- At least 3 Wheel Speeds < 10 km/h

Note:
- CAN Communication is only available for the Diagnostic Flash Reprogramming protocol.
- This document does not refer to services which only available in the Reprogramming Session.

#### 3.3.1.8. Subfunction $03 - extendedDiagnosticSession

The extendedDiagnosticSession allows dedicated actuator activations and advanced troubleshooting routines. As long as the extendedDiagnosticSession is running, no controller is active to prevent actuation conflicts.

Additionally, this session is protected by a speed limit of 10 km/h. The session cannot be activated if the speed limit is exceeded. Also, a currently active extendedDiagnosticSession is terminated when the speed limit is exceeded.

### 3.3.2. Service $11 - ECUReset

#### 3.3.2.1. Description

This service requests the ECU to effectively perform a reset. The ECUReset positive response message (if required) is sent before the reset is executed in the ECU.

After a successful reset the ECU is starting the default diagnostic session.

#### 3.3.2.2. Availability

| | | |
|---|---|---|
| **Supported Diagnostic Sessions** | **X** | defaultSession |
| | **X** | extendedDiagnosticSession |
| **Supported Addressing Modes** | **X** | physical |
| | **X** | functional |

#### 3.3.2.3. Request Message

| Byte | Bit | Description | Value + Unit | LSB | Offset |
|---|---|---|---|---|---|
| 1 | | Request Service Id = [Diagnostic Session Control] | $11 | | |
| 2 | 0..6 | Sub Function = [Reset Type] | $03 = softReset | | |
| | 7 | Suppress Positive Response Bit | 0 = ECU is sending a positive response<br>1 = ECU is not sending a positive response | | |



© This document is the exclusive property of Robert Bosch GmbH. Without their consent it may not be reproduced or given to third parties.
If printed this is a uncontrolled document. The user must verify it is an authorized edition prior to use.

#### 3.3.2.4. Response Message

| Byte | Bit | Description | Value + Unit | LSB | Offset |
|---|---|---|---|---|---|
| 1 | | Response Service Id = [ECU Reset] | $51 | | |
| 2 | | Sub Function = [Reset Type] | $03 | | |

#### 3.3.2.5. Negative Response Codes

| Value | Description |
|---|---|
| $12 | Sub Function Not Supported |
| $13 | Incorrect Message Length |

### 3.3.3. Service $14 - ClearDiagnosticInformation

#### 3.3.3.1. Description

The service ClearDiagnosticInformation is used to clear the diagnostic information stored in the ECU's memory. The diagnostic information consists of

- DTC status bytes
- Captured snapshot data

ClearDiagnosticInformation resets any "drive-cycle" faults, which might require a dedicated good-check in subsequent ignition/power cycles.

#### 3.3.3.2. Availability

| | | |
|---|---|---|
| **Supported Diagnostic Sessions** | X | defaultSession |
| | X | extendedDiagnosticSession |
| **Supported Addressing Modes** | X | physical |
| | | functional |

#### 3.3.3.3. Request Message

| Byte | Bit | Description | Value + Unit | LSB | Offset |
|---|---|---|---|---|---|
| 1 | | Request Service Id = [ClearDTCInformation] | $14 | | |
| 2..4 | | groupOfDTC[] = [<br>groupOfDTCHighByte<br>groupOfDTCMiddleByte<br>groupOfDTCLowByte ] | <br>$xx<br>$xx<br>$xx | | |



© This document is the exclusive property of Robert Bosch GmbH. Without their consent it may not be reproduced or given to third parties.
If printed this is a uncontrolled document. The user must verify it is an authorized edition prior to use.

The only supported groupOfDTC is "All Groups (all DTCs)".

| Byte | Bit | Description | Value + Unit | LSB | Offset |
|---|---|---|---|---|---|
| 1 | | Request Service Id = [ClearDTCInformation] | $14 | | |
| 2..4 | | groupOfDTC[] = [ All Groups (all DTCs) ] | $FF $FF $FF | | |

### 3.3.3.4. Response Message

| Byte | Bit | Description | Value + Unit | LSB | Offset |
|---|---|---|---|---|---|
| 1 | | Response Service Id = [ClearDiagnosticInformation] | $54 | | |

### 3.3.3.5. Negative Response Codes

| Value | Description |
|---|---|
| $13 | Incorrect Message Length |
| $22 | Conditions Not Correct |
| $31 | Request Out Of Range |
| $78 | Request Correctly Received – Response Pending |

## 3.3.4. Service $19 - ReadDTCInformation

### 3.3.4.1. Description

The service ReadDTCInformation allows a client to read DTC information from the ECU. The type of information which is read depends on the selected subfunction.
The EEPROM based fault memory of the ECU supports 6 failure entries. The Status of DTC parameter “Warning Indicator” is supported for confirmed DTCs only.

### 3.3.4.2. Availability

| | | |
|---|---|---|
| **Supported Diagnostic Sessions** | **X** | defaultSession |
| | **X** | extendedDiagnosticSession |
| **Supported Addressing Modes** | **X** | physical |
| | | functional |

### 3.3.4.3. Request Message

| Byte | Bit | Description | Value + Unit | LSB | Offset |
|---|---|---|---|---|---|
| 1 | | Request Service Id = [ReadDTCInformation] | $19 | | |
| 2 | | Subfunction | $xx | | |
| 3..x | | Additional Data | ... | | |

Note: The additional data depends on the Subfunction. Request messages are described for each subfunction later on.



© This document is the exclusive property of Robert Bosch GmbH. Without their consent it may not be reproduced or given to third parties.
If printed this is a uncontrolled document. The user must verify it is an authorized edition prior to use.

### 3.3.4.4. Response Message

| Byte | Bit | Description | Value + Unit | LSB | Offset |
|---|---|---|---|---|---|
| 1 | | Response Service Id = [ReadDTCInformation] | $59 | | |
| 2 | | Subfunction | $xx | | |
| 3..x | | Additional Data | ... | | |

Note: The additional data depends on the Subfunction. Request messages are described for each subfunction later on.

### 3.3.4.5. Negative Response Codes

| Value | Description |
|---|---|
| $12 | Sub Function Not Supported |
| $13 | Incorrect Message Length |
| $22 | Conditions Not Correct |
| $31 | Request Out Of Range |
| $78 | Request Correctly Received – Response Pending |
| $7F | Service Not Supported in Active Session |

### 3.3.4.6. Subfunction $01 - reportNumberOfDTCByStatusMask

The Subfunction $01 - reportNumberOfDTCByStatusMask can be used to retrieve the number of diagnostic trouble codes matching a defined status mask to the diagnostic tool

Structure of the parameters statusOfDTC and DTCStatusMask:

| Bit | Description |
|---|---|
| 0 | Test Failed (01h = Yes) |
| 1 | Reserved (0) |
| 2 | Reserved (0) |
| 3 | confirmedDTC (01h = Yes) |
| 4 | Test Not Complete Since Last Clear (01h = Yes) |
| 5 | Test Failed Since Last Clear (01h = Yes) |
| 6 | Reserved (0) |
| 7 | Warning Indicator requested (01h = Yes) |

#### 3.3.4.6.1. Request Message

| Byte | Bit | Description | Value + Unit | LSB | Offset |
|---|---|---|---|---|---|
| 1 | | Request Service Id = [ReadDTCInformation] | $19 | | |
| 2 | | Subfunction reportDTCByStatusMask | $01 | | |
| 3 | | DTCStatusMask | $xx | | |



© This document is the exclusive property of Robert Bosch GmbH. Without their consent it may not be reproduced or given to third parties.
If printed this is a uncontrolled document. The user must verify it is an authorized edition prior to use.

### 3.3.4.6.2. Response Message

| Byte | Bit | Description | Value + Unit | LSB | Offset |
|---|---|---|---|---|---|
| 1 | | Response Service Id = [ReadDTCInformation] | $59 | | |
| 2 | | Subfunction reportDTCByStatusMask | $01 | | |
| 3 | | DTCStatusMask | $B9 | | |
| 4 | | DTC Format Identifier<br>[00h] ISO15031-6 DTC Format | $00 | | |
| 5<br>6 | | DTC Count<br>Byte #1 DTC Count High Byte<br>Byte #2 DTC Count Low Byte | $00-$FF<br>$00-$FF | | |

### *3.3.4.7. Subfunction $02 - reportDTCByStatusMask*

The Subfunction $02 - reportDTCByStatusMask can be used to retrieve a list of DTCs including their status.

Structure of the parameters statusOfDTC and DTCStatusMask:

| Bit | Description |
|---|---|
| 0 | Test Failed (01h = Yes) |
| 1 | Reserved (0) |
| 2 | Reserved (0) |
| 3 | *confirmedDTC (01h = Yes)* |
| 4 | Test Not Complete Since Last Clear (01h = Yes) |
| 5 | Test Failed Since Last Clear (01h = Yes) |
| 6 | Reserved (0) |
| 7 | Warning Indicator requested (01h = Yes) |

**confirmedDTC:**
This bit indicates if a set of DTCSnapshotDataRecords was stored in the failure memory and is currently available. The maximum number of stored DTCs is six.

A value of 1 indicates that snapshot information is currently available; a value of 0 indicates that currently there is no snapshot information available.

This bit is reset to 0 after the run of ClearDiagnosticInformation. This bit is saved in non-volatile memory.

The DTCs are filtered by the DTCStatusMask which is part of the request. The evaluation is done as a bit-wise logical AND-ing operation between the DTCStatusMask and the statusOfDTC. Whenever the result of this AND-ing operation is not zero, the DTC will be part of the list that is sent by the ECU. If the client uses bits in the DTCStatusMask that are not supported by the ECU, the ECU will ignore these bits and just use the bits that are supported.

```
IF [DTCStatusMask & statusOfDTC] > 1
        SEND DTC
ELSE
        DO NOT SEND DTC
```



© This document is the exclusive property of Robert Bosch GmbH. Without their consent it may not be reproduced or given to third parties.
If printed this is a uncontrolled document. The user must verify it is an authorized edition prior to use.

### 3.3.4.7.1. Request Message

| Byte | Bit | Description | Value + Unit | LSB | Offset |
|---|---|---|---|---|---|
| 1 | | Request Service Id = [ReadDTCInformation] | $19 | | |
| 2 | | Subfunction reportDTCByStatusMask | $02 | | |
| 3 | | DTCStatusMask | $xx | | |

### 3.3.4.7.2. Response Message

| Byte | Bit | Description | Value + Unit | LSB | Offset |
|---|---|---|---|---|---|
| 1 | | Response Service Id = [ReadDTCInformation] | $59 | | |
| 2 | | Subfunction reportDTCByStatusMask | $02 | | |
| 3 | | DTCStatusAvailabilityMask | $B9 | | |
| | | DTCAndStatusRecord[] = [ | | | |
| 4 | | DTCHighByte#1 | $xx | | |
| 5 | | DTCMiddleByte#1 | $xx | | |
| 6 | | DTCLowByte#1 | $xx | | |
| 7 | | statusOfDTC#1 | $xx | | |
| 8 | | DTCHighByte#2 | $xx | | |
| 9 | | DTCMiddleByte#2 | $xx | | |
| 10 | | DTCLowByte#2 | $xx | | |
| 11 | | statusOfDTC#2 | $xx | | |
| .. | | .. | $xx | | |
| .. | | .. | $xx | | |
| n-3 | | DTCHighByte#m | $xx | | |
| n-2 | | DTCMiddleByte#m | $xx | | |
| n-1 | | DTCLowByte#m | $xx | | |
| n | | statusOfDTC#m ] | $xx | | |

Remark:

- The parameters DTC #1 and Status of DTC #1 are only present if a least one DTC is available to be reported according to the requested DTC Status Mask.
- The parameters DTC #n and Status of DTC #n are only present if more than one DTCs are available to be reported according to the requested DTC Status Mask.



© This document is the exclusive property of Robert Bosch GmbH. Without their consent it may not be reproduced or given to third parties.
If printed this is a uncontrolled document. The user must verify it is an authorized edition prior to use.

### *3.3.4.8. Subfunction $06 - reportDTCExtendedDataRecordByDTCNumber*

The Subfunction $06 - reportDTCExtendedDataRecordByDTCNumber can be used to retrieve theenvironmental data from the fault memory.associated with a particular DTC.

#### 3.3.4.8.1. Request Message

| Byte | Bit | Description | Value + Unit | LSB | Offset |
|---|---|---|---|---|---|
| 1 | | Request Service Id = [ReadDTCInformation] | $19 | | |
| 2 | | Subfunction reportDTCExtendedDataRecordByDTCNumber | $06 | | |
| 3<br>4<br>5 | | DTCMaskRecord[] = [<br>DTCHighByte<br>DTCMiddleByte<br>DTCLowByte ] | $FF | | |
| 6 | | DTCExtendedRecordNumber | $01 or $FF | | |

DTCExtendedRecordNumber = [FFh] for reporting all Records



© This document is the exclusive property of Robert Bosch GmbH. Without their consent it may not be reproduced or given to third parties.
If printed this is a uncontrolled document. The user must verify it is an authorized edition prior to use.

### 3.3.4.8.2. Response Message

| Byte | Bit | Description | Value + Unit | LSB | Offset |
|---|---|---|---|---|---|
| 1 | | Response Service Id = [ReadDTCInformation] | $59 | | |
| 2 | | Subfunction<br>reportDTCExtendedDataRecordByDTCNumber | $06 | | |
| | | DTCAndStatusRecord[] = [ | | | |
| 3 | | DTCHighByte#1 | $xx | | |
| 4 | | DTCMiddleByte#1 | $xx | | |
| 5 | | DTCLowByte#1 | $xx | | |
| 6 | | statusOfDTC#m ] | $xx | | |
| 7 | | ExtendedDataRecord No 1 | $01 | | |
| 8 ..9 | | Original Odometer<br>Byte #1 Original Odometer (High Byte)<br>Byte #2 Original Odometer (Low Byte)<br>Format: 1 Bit = 16km (unsigned Hex)<br>Range: [0000h] … [F423h] (0km…999984km): Valid Data Range<br>[FFFFh]: Data not available<br>Odometer value at the original (first) instance of a specific fault | $00-FF<br>$00-FF | | |
| 10..11 | | Most Recent Odometer<br>Byte #1 Original Odometer (High Byte)<br>Byte #2 Original Odometer (Low Byte)<br>Format: 1 Bit = 16km (unsigned Hex)<br>Range: [0000h] … [F423h] (0km…999984km): Valid Data Range<br>[FFFFh]: Data not available<br>Odometer value at the most recent instance of a specific fault<br>The Most Recent Odometer is updated when a DTC status is changing from “not active”<br>to “active” and when the DTC status was not active in the previous operation cycle! | $00-FF<br>$00-FF | | |
| 12. | | Valve Relay Voltage | $00-$FF (0 .. 20.4 V) | 0.08 | 0 |
| 13 | | Battery Voltage | $00-$FF (0 .. 20.4 V) | 0.08 | 0 |
| 14 | 0-6<br>7 | Wheel Speed Front Left<br>Resolution: 1 Bit = 2 km/h (Unsigned Hex)<br>Range: 0 km/h … 252 km/h [00h … 7Eh]<br>Signal not valid: [7Fh]<br>Reserved | $00-$FF (0 .. 252 km/h) | 1Bit = 2km/h | 0 |
| 15 | 0-6<br>7 | Wheel Speed Front Right<br>Resolution: 1 Bit = 2 km/h (Unsigned Hex)<br>Range: 0 km/h … 252 km/h [00h … 7Eh]<br>Signal not valid: [7Fh]<br>Reserved | $00-$FF (0 .. 252 km/h) | 1Bit = 2km/h | 0 |
| 16 | 0-6<br>7 | Wheel Speed Rear Left<br>Resolution: 1 Bit = 2 km/h (Unsigned Hex)<br>Range: 0 km/h … 252 km/h [00h … 7Eh]<br>Signal not valid: [7Fh]<br>Reserved | $00-$FF (0 .. 252 km/h) | 1Bit = 2km/h | 0 |



© This document is the exclusive property of Robert Bosch GmbH. Without their consent it may not be reproduced or given to third parties.
If printed this is a uncontrolled document. The user must verify it is an authorized edition prior to use.

| | | | | | |
|---|---|---|---|---|---|
| 17 | 0-6<br><br>7 | Wheel Speed Rear Right<br><br>Resolution: 1 Bit = 2 km/h (Unsigned Hex)<br>Range: 0 km/h … 252 km/h [00h … 7Eh]<br>Signal not valid: [7Fh]<br><br>Reserved | $00-$FF (0 .. 252 km/h) | 1Bit = 2km/h | 0 |
| 18 | | Power Supply of Valves | 0 .. 20.4 V | 0.08 | 0 |
| 19 | | UPump - Supply Pump Voltage<br>Format: 1 Bit = 0,08 V (unsigned Hex)<br>Range: 0 V ... 20,4 V [00h ... FFh]<br>Hint:<br>For RFP control via ANS (Adaptive Noise Shaping) UB ($U_{Battt}$) Pump is<br>physically measured<br>For all other Pump control UB Pump is set zero | 0 ...20.4 V | | |
| 20 | | Master Cylinder Pressure<br>Format: 1 Bit = 1,00 bar (Unsigned Hex)<br>Range: -43bar … 211bar [00h … FEh]<br>Offset: -43bar<br>Signal not valid: [FFh] | $00 - $FE | | |
| 21 | | Steering Angle (SA)<br>Format: 1 Bit = 6,4 ° (Signed Hex)<br>Range: -819,2 ° ... +806,4 ° [80h … FFh, 00h … 7Eh]<br>Signal not valid: [7Fh] | $00 - $FF | | |
| 22 | | Longitudinal Acceleration (AX)<br>Format: 1 Bit = 0,1574 m/s2 (Signed Hex)<br>Range: -20,14 m/s2 ... +19,83 m/s2 [80h ... FFh, 00h ... 7Eh]<br>Signal not valid: [7Fh] | $00 - $FF | | |
| 23 | | Lateral Acceleration (AY)<br>Format: 1 Bit = 0,1574 m/s2 (Signed Hex)<br>Range: -20,14 m/s2 ... +19,83 m/s2 [80h ... FFh, 00h ... 7Eh]<br>Signal not valid: [7Fh] | $00 - $FF | | |
| 24 | | Yaw Rate (YRS)<br>Format: 1 Bit = 0,902 °/s (Signed Hex)<br>Range: -115,45 °/s ... +113,65 °/s [80h ... FFh, 00h ... 7Eh]<br>Signal not valid: [7Fh] | $00 - $FF | | |
| 25 | <br>0<br>1<br>2<br>3<br>4<br>5..7 | Controller States = [<br>EBD<br>ABS<br>ASR(TCS)<br>MSR(DTC)<br>ESP(VDC)<br>Reserved ] | 0:disabled / 1:enabled<br>0/1<br>0/1<br>0/1<br>0/1<br>0/1<br>0 | | |
| 26, 27 | | Monitoring ID (Internal Bosch ID for a monitoring).<br>Refer to DDL document for ID description | Byte 26: High Byte MID<br>Byte 27: Low Byte MID | | |



© This document is the exclusive property of Robert Bosch GmbH. Without their consent it may not be reproduced or given to third parties.
If printed this is a uncontrolled document. The user must verify it is an authorized edition prior to use.

### 3.3.5. Service $22 - ReadDataByIdentifier

#### 3.3.5.1. Description

This service allows the diagnostic tool to request data record values from the ECU identified by Record Data Identifiers. The client request message contains one 2-byte Data Identifier values that identifies the requested Data Record.

#### 3.3.5.2. Availability

| | | |
|---|---|---|
| **Supported Diagnostic Sessions** | **X** | defaultSession |
| | **X** | extendedDiagnosticSession |
| **Supported Addressing Modes** | **X** | physical |
| | | functional |

#### 3.3.5.3. Request Message

| Byte | Bit | Description | Value + Unit | LSB | Offset |
|---|---|---|---|---|---|
| 1 | | Request Service Id = [Read Data By Identifier] | $22 | | |
| 2..3 | | Identifier | $xxxx | | |

#### 3.3.5.4. Response Message

Refer to the subsection for each identifier for further details.

#### 3.3.5.5. Negative Response Codes

| Value | Description |
|---|---|
| $13 | Incorrect Message Length |
| $31 | Request Out Of Range |
| $22 | Conditions not correct – EEPROM error |
| $78 | Request Correctly Received – Response Pending |



© This document is the exclusive property of Robert Bosch GmbH. Without their consent it may not be reproduced or given to third parties.
If printed this is a uncontrolled document. The user must verify it is an authorized edition prior to use.

### 3.3.5.6. Identifier $F180 - BootSoftwareVersionInformation

This identifier allows identifying the bootloader SW version details.

| Byte | Bit | Description | Value + Unit | LSB | Offset |
|---|---|---|---|---|---|
| 1 | | Response Service Id = [Read Data By Identifier] | $62 | | |
| 2..3 | | Identifier = [BootSoftwareVersionInformation] | $F180 | | |
| 4..12 | | Boot Software Version Information<br>Major Byte Year<br><br>Middle Byte Month<br><br>Minor Byte Day | <br>$00000000-FFFFFFFF<br>$0001-$000C<br><br>$0000-$00FF | | |

### 3.3.5.7. Identifier $F181 - applicationSoftwareIdentificationDataIdentifier

| Byte | Bit | Description | Value + Unit | LSB | Offset |
|---|---|---|---|---|---|
| 1 | | Response Service Id = [Read Data By Identifier] | $62 | | |
| 2..3 | | Identifier = [applicationSoftwareIdentificationDataIdentifier] | $F181 | | |
| 4 - 13 | | Software Part Number – AS<br>Byte #1 Software Part Number High Byte<br>Byte #2 Software Part Number<br>Byte #3 Software Part Number<br>Byte #4 Software Part Number<br>Byte #5 Software Part Number<br>Byte #6 Software Part Number<br>Byte #7 Software Part Number<br>Byte #8 Software Part Number<br>Byte #9 Software Part Number<br>Byte #10 Software Part Number Low Byte | ASCII<br>$00-$FF | | |

EEPROM data is protected by checksum algorithms. If the EEPROM data is corrupted (e.g. because of power loss during writing) or if the EEPROM contents are empty, the negative response 0x22 will be returned.

Delivery content of all bytes is to be defined separately and not part of this document.

### 3.3.5.8. Identifier $F186 - activeDiagnosticSessionDataIdentifier

This identifier return the currently active diagnostic session, selected with service ID $10.

| Byte | Bit | Description | Value + Unit | LSB | Offset |
|---|---|---|---|---|---|
| 1 | | Response Service Id = [Read Data By Identifier] | $62 | | |
| 2..3 | | Identifier = [activeDiagnosticSessionDataIdentifier] | $F186 | | |
| 4 | | Diagnostic Session Type<br>[01h] Default Diagnostic Session<br>[02h] Programming Session<br>[03h] Extended Diagnostic Session | $xx | | |

If there is an internal error by getting the actual session, then the return session value is 0xFF.



© This document is the exclusive property of Robert Bosch GmbH. Without their consent it may not be reproduced or given to third parties.
If printed this is a uncontrolled document. The user must verify it is an authorized edition prior to use.

### 3.3.5.9. Identifier $F1A0- VINDataIdentifier

This identifier returns the Vehicle Identification Number, which is stored in EEPROM. Refer to service ID $31 for the learn routine of this identifier. A range of 17 bytes of EEPROM is reserved, which allows storing the VIN in ASCII format.

| Byte | Bit | Description | Value + Unit | LSB | Offset |
|---|---|---|---|---|---|
| 1 | | Response Service Id = [Read Data By Identifier] | $62 | | |
| 2..3 | | Identifier = [VINDataIdentifier] | $F1A0 | | |
| 4 .. 20 | | Vehicle Identification Number | 17-byte ASCII | | |

EEPROM data is protected by checksum algorithms. If the EEPROM data is corrupted the negative response 0x22 will be returned.

### 3.3.5.10. Identifier $F191 - vehicleManufacturerECUHardwareNumberDataIdentifier

| Byte | Bit | Description | Value + Unit | LSB | Offset |
|---|---|---|---|---|---|
| 1 | | Response Service Id = [Read Data By Identifier] | $62 | | |
| 2..3 | | Identifier = [vehicleManufacturerECUHardwareNumberDataIdentifier] | $F191 | | |
| 4 - 13 | | Software Part Number – AS<br>Byte #1 Software Part Number High Byte<br>Byte #2 Software Part Number<br>Byte #3 Software Part Number<br>Byte #4 Software Part Number<br>Byte #5 Software Part Number<br>Byte #6 Software Part Number<br>Byte #7 Software Part Number<br>Byte #8 Software Part Number<br>Byte #9 Software Part Number<br>Byte #10 Software Part Number Low Byte | ASCII<br>$00-$FF | | |

The $F191 delivers the same information as the $F181. EEPROM data is protected by checksum algorithms. If the EEPROM data is corrupted (e.g. because of power loss during writing) or if the EEPROM contents are empty, the negative response 0x22 will be returned.

Delivery content of all bytes is to be defined separately and not part of this document.



© This document is the exclusive property of Robert Bosch GmbH. Without their consent it may not be reproduced or given to third parties.
If printed this is a uncontrolled document. The user must verify it is an authorized edition prior to use.

### 3.3.5.11. Identifier $F193 - systemSupplierECUHardwareVersionNumberDataIdentifier

This identifier allows identifying the HW version details.

| Byte | Bit | Description | Value + Unit | LSB | Offset |
|---|---|---|---|---|---|
| 1 | | Response Service Id = [Read Data By Identifier] | $62 | | |
| 2..3 | | Identifier = [systemSupplierECUHardwareVersionNumberDataIdentifier] | $F193 | | |
| 4..6 | | Hardware Version Information<br>Major Byte Year<br>Middle Byte Week<br>Minor Byte Patch Level | <br>$00-$FF<br>$01-$35<br>$00-$FF | | |

### 3.3.5.12. Identifier $F194 - systemSupplierECUSoftwareNumberDataIdentifier

This identifier allows identifying the application SW details.

| Byte | Bit | Description | Value + Unit | LSB | Offset |
|---|---|---|---|---|---|
| 1 | | Response Service Id = [Read Data By Identifier] | $62 | | |
| 2..3 | | Identifier = [systemSupplierECUSoftwareNumberDataIdentifier] | $F194 | | |
| 4 - 8 | | Bosch Software BB-Number<br>Byte #1 Bosch BB-Number – (High Byte)<br>Byte #2 Bosch BB-Number<br>Byte #3 Bosch BB-Number<br>Byte #4 Bosch BB-Number<br>Byte #5 Bosch BB-Number – (Low Byte) | ASCII<br>$00-$FF | | |
| 9..16 | | Bosch Software Version Number<br>Byte #1 Bosch Software Version Number – (MSB)<br>Byte #2 Bosch Software Version Number<br>Byte #3 Bosch Software Version Number<br>Byte #4 Bosch Software Version Number<br>Byte #5 Bosch Software Version Number<br>Byte #6 Bosch Software Version Number<br>Byte #7 Bosch Software Version Number<br>Byte #8 Bosch Software Version Number – (LSB) | ASCII<br>$00-$FF | | |

### 3.3.5.13. Identifier $F195 - systemSupplierECUSoftwareVersionNumberDataIdentifier

This identifier allows identifying the SW version details.

| Byte | Bit | Description | Value + Unit | LSB | Offset |
|---|---|---|---|---|---|
| 1 | | Response Service Id = [Read Data By Identifier] | $62 | | |
| 2..3 | | Identifier = [systemSupplierECUSoftwareVersionNumberDataIdentifier] | $F195 | | |
| 4..6 | | Software Version Information<br>Major Byte Year<br>Middle Byte Week<br>Minor Byte Patch Level | <br>$00-$FF<br>$01-$35<br>$00-$FF | | |



© This document is the exclusive property of Robert Bosch GmbH. Without their consent it may not be reproduced or given to third parties.
If printed this is a uncontrolled document. The user must verify it is an authorized edition prior to use.

### 3.3.5.14. Identifier $F212 - vehiclePerformanceConfigurationDataIdentifier

This identifier allows identifying the vehicle performance configuration.

| Byte | Bit | Description | Value + Unit | LSB | Offset |
|---|---|---|---|---|---|
| 1 | | Response Service Id = [Read Data By Identifier] | $62 | | |
| 2..3 | | Identifier = [vehiclePerformanceConfigurationDataIdentifier] | $F212 | | |
| 4 | | Configured vehicle performance | $00: Not configured<br>$01: 400Nm vehicle<br>$02: 600Nm vehicle<br>$else: invalid / not configured | | |

### 3.3.5.15. Identifier $FD00 - speedInformationDataIdentifier

This identifier allows reading information about the current vehicle and wheel speeds.

| Byte | Bit | Description | Value + Unit | LSB | Offset |
|---|---|---|---|---|---|
| 1 | | Response Service Id = [Read Data By Identifier] | $62 | | |
| 2..3 | | Identifier = [speedInformationDataIdentifier] | $FD00 | | |
| 4 .. 5 | | Wheel Speed Front Left<br>Byte #1 Wheel Speed (High Byte)<br>Byte #2 Wheel Speed (Low Byte)<br>Format: 1 Bit = 1/64 m/s (unsigned Hex)<br>Range: 0 m/s … 100 m/s [0000h … 1900h]<br>Wheel Speed Invalid [FFFFh] | 0…100m/s<br>0 .. 360km/h | 1/64<br>0.05625 | 0 |
| 6 .. 7 | | Wheel Speed Front Right<br>Byte #1 Wheel Speed (High Byte)<br>Byte #2 Wheel Speed (Low Byte)<br>Format: 1 Bit = 1/64 m/s (unsigned Hex)<br>Range: 0 m/s … 100 m/s [0000h … 1900h]<br>Wheel Speed Invalid [FFFFh] | 0…100m/s<br>0 .. 360km/h | 1/64<br>0.05625 | 0 |
| 8 .. 9 | | Wheel Speed Rear Left<br>Byte #1 Wheel Speed (High Byte)<br>Byte #2 Wheel Speed (Low Byte)<br>Format: 1 Bit = 1/64 m/s (unsigned Hex)<br>Range: 0 m/s … 100 m/s [0000h … 1900h]<br>Wheel Speed Invalid [FFFFh] | 0…100m/s<br>0 .. 360km/h | 1/64<br>0.05625 | 0 |
| 10 .. 11 | | Wheel Speed Rear Right<br>Byte #1 Wheel Speed (High Byte)<br>Byte #2 Wheel Speed (Low Byte)<br>Format: 1 Bit = 1/64 m/s (unsigned Hex)<br>Range: 0 m/s … 100 m/s [0000h … 1900h]<br>Wheel Speed Invalid [FFFFh] | 0…100m/s<br>0 .. 360 km/h | 1/64<br>0.05625 | 0 |



© This document is the exclusive property of Robert Bosch GmbH. Without their consent it may not be reproduced or given to third parties.
If printed this is a uncontrolled document. The user must verify it is an authorized edition prior to use.

### 3.3.5.16. Identifier $FD01 - inputDataIdentifier

This identifier allows reading information about several ECU inputs.

| Byte | Bit | Description | Value + Unit | LSB | Offset |
|---|---|---|---|---|---|
| 1 | | Response Service Id = [Read Data By Identifier] | $62 | | |
| 2..3 | | Identifier = [inputDataIdentifier] | $FD01 | | |
| 4 | | Battery Voltage | 0 .. 20.4 V | 0.08 | 0 |
| 5 | | Brake Light Switch | $00 = not applied<br>$01 = applied | | |

### 3.3.5.17. Identifier $FD02 - actuationStateDataIdentifier

This identifier allows reading information about the actuation state of the ECU's actuators.

| Byte | Bit | Description | Value + Unit | LSB | Offset |
|---|---|---|---|---|---|
| 1 | | Response Service Id = [Read Data By Identifier] | $62 | | |
| 2..3 | | Identifier = [actuationStateDataIdentifier] | $FD02 | | |
| 4 | 0 | Valve Actuation State: Inlet Valve Front Left (EVFL) | 0 = inactive, 1 = active | | |
| | 1 | Valve Actuation State: Outlet Valve Front Left (AVFL) | 0 = inactive, 1 = active | | |
| | 2 | Valve Actuation State: Inlet Valve Front Right (EVFR) | 0 = inactive, 1 = active | | |
| | 3 | Valve Actuation State: Outlet Valve Front Left (AVFR) | 0 = inactive, 1 = active | | |
| | 4 | Valve Actuation State: Inlet Valve Rear Left (EVRL) | 0 = inactive, 1 = active | | |
| | 5 | Valve Actuation State: Outlet Valve Rear Left (AVRL) | 0 = inactive, 1 = active | | |
| | 6 | Valve Actuation State: Inlet Valve Rear Right (EVRR) | 0 = inactive, 1 = active | | |
| | 7 | Valve Actuation State: Outlet Valve Rear Left (AVRR) | 0 = inactive, 1 = active | | |
| 5 | 0 | Valve Actuation State: Valve USV1 | 0 = inactive, 1 = active | | |
| | 1 | Valve Actuation State: Valve USV2 | 0 = inactive, 1 = active | | |
| | 2 | Valve Actuation State: Valve HSV1 | 0 = inactive, 1 = active | | |
| | 3 | Valve Actuation State: Valve HSV2 | 0 = inactive, 1 = active | | |
| | 4 | Valve Relay Status | 0 = error, 1 = state OK | | |
| | 5 | Pump Motor Status | 0 = inactive, 1 = active | | |
| | 6 | Electric Vacuum Pump | 0 = inactive, 1 = active | | |
| | 7 | Reserved | 0 | | |

### 3.3.5.18. Identifier $FD03 – systemSensorDataIdentifier

This identifier allows reading information about the sensors delivering data to the ECU.

| Byte | Bit | Description | Value + Unit | LSB | Offset |
|---|---|---|---|---|---|
| 1 | | Response Service Id = [Read Data By Identifier] | $62 | | |
| 2..3 | | Identifier = [systemSensorDataIdentifier] | $FD03 | | |
| 4 .. 5 | | Master Cylinder Pressure<br>Byte #1 Master Cylinder Pressure (High Byte)<br>Byte #2 Master Cylinder Pressure (Low Byte)<br>Format: 1 Bit = 0,01533 bar (signed Hex)<br>Range: -42,5 bar … +425,0 bar<br>[F526h … FFFFh, 0000h … 6C82h] | $00 - $FF | | 0 |
| 6 | 0 | Status of Master Cylinder Pressure<br>Status of Master Cylinder Pressure signal | $00 - $FF | | |



© This document is the exclusive property of Robert Bosch GmbH. Without their consent it may not be reproduced or given to third parties.
If printed this is a uncontrolled document. The user must verify it is an authorized edition prior to use.

| | | | | | |
|---|---|---|---|---|---|
| | 1-7 | [00h] = signal invalid<br>[01h] = signal valid<br>Reserved (set to zero) | | | |
| 7 .. 8 | | Steering Angle<br>Byte #1 Steering Angle (High Byte)<br>Byte #2 Steering Angle (Low Byte)<br>Format: 1 Bit = 0,1 ° (signed Hex)<br>Range: -720 ° … +720 °<br>[E3E0h … FFFFh, 0000h … 1C20h] | $00 - $FF | | 0 |
| 9 | 0<br>1-7 | Status of Steering Angle Sensor (SA)<br>Status of SA signal<br>[00h] = signal invalid<br>[01h] = signal valid<br>Reserved (set to zero) | $00 - $FF | | |
| 10 .. 11 | | Yaw Rate<br>Byte #1 Yaw Rate (High Byte)<br>Byte #2 Yaw Rate (Low Byte)<br>Format: 1 Bit = 0,12219 °/s (signed Hex)<br>Range: -120,0 °/s … +120,0 °/s<br>[FC2Ah … FFFFh, 0000h … 03D6h] | $00 - $FF | | 0 |
| 12 | 0<br>1-7 | Status of Yaw Rate (YR)<br>Bit 0 Status of YR signal<br>[00h] = signal invalid<br>[01h] = signal valid<br>Bit 1...7 Reserved (set to zero) | $00 - $FF | | |
| 13 .. 14 | | Lateral Acceleration (Ay)<br>Byte #1 Lateral Acceleration (High Byte)<br>Byte #2 Lateral Acceleration (Low Byte)<br>Format: 1 Bit = 0,02713 m/s2 (signed Hex)<br>Range: -21,59 m/s2 … +21,59 m/s2<br>[FCE4h … FFFFh, 0000h, … 031Ch] | $00 - $FF | | 0 |
| 15 | 0<br>1-7 | Status of Lateral Acceleration (AY)<br>Status of AY signal<br>[00h] = signal invalid<br>[01h] = signal valid<br>Reserved (set to zero) | $00 - $FF | | |
| 16 .. 17 | | Longitudinal Acceleration (Ax)<br>Byte #1 Longitudinal Acceleration (High Byte)<br>Byte #2 Longitudinal Acceleration (Low Byte)<br>Format: 1 Bit = 0,02713 m/s2 (signed Hex)<br>Range: -21,59 m/s2 … +21,59 m/s2<br>[FCE4h … FFFFh, 0000h, … 031Ch] | $00 - $FF | | |
| 18 | 0<br>1-7 | Status of Longitudinal Acceleration (AX)<br>Status of AX signal<br>[00h] = signal invalid<br>[01h] = signal valid<br>Reserved (set to zero) | $00 - $FF | | |
| 19 .. 20 | | Pressure Vacuum Sensor<br>Byte #1 Pressure from Vacuum Sensor (High Byte)<br>Byte #2 Pressure from Vacuum Sensor (Low Byte)<br>Range: -2047.6 to 2047 mbar<br>Format: 1 Bit = 0,001 bar (signed Hex) | $00 - $FF | | |



© This document is the exclusive property of Robert Bosch GmbH. Without their consent it may not be reproduced or given to third parties.
If printed this is a uncontrolled document. The user must verify it is an authorized edition prior to use.

### 3.3.5.19. Identifier $FD04 – controllerStatusDataIdentifier

This identifier allows reading information about the current controller status.

| Byte | Bit | Description | Value + Unit | LSB | Offset |
|---|---|---|---|---|---|
| 1 | | Response Service Id = [Read Data By Identifier] | $62 | | |
| 2..3 | | Identifier = [controllerStatusDataIdentifier] | $FD04 | | |
| 4 | 0 | ABS Controller Status | $00 = deactivated<br>$01 = activated | | |
| 4 | 1 | TCS Controller Status | $00 = deactivated<br>$01 = activated | | |
| 4 | 2 | ESP Controller Status | $00 = deactivated<br>$01 = activated | | |
| 4 | 3 | EBD Controller Status | $00 = deactivated<br>$01 = activated | | |
| 4 | 4-7 | reserved | | | |

### 3.3.5.20. Identifier $FD05 – EVPData

This identifier allows reading information about the EVP cycle counts and runtime.

| Byte | Bit | Description | Value + Unit | LSB | Offset |
|---|---|---|---|---|---|
| 1 | | Response Service Id = [Read Data By Identifier] | $62 | | |
| 2..3 | | Identifier = [EVPData] | $FD05 | | |
| 4 - 7 | | EVP runtime<br>Byte #1 EVP Runtime (High Byte)<br>Byte #2 EVP Runtime<br>Byte #3 EVP Runtime<br>Byte #4 EVP Runtime (Low Byte) | $00 00 00 00 -<br>$FF FF FF FF<br>Min value physical: 0 [s]<br>Max value physical:<br>72.000.000 [s] (20000 [h])<br><br>Min value numerical: 0<br>Max value numerical:<br>3.600.000.000<br>Internal resolution: 0,02 [s] / bit | | |
| 8 - 11 | | EVP cycle counts<br>Byte #1 EVP Cycle counts (High Byte)<br>Byte #2 EVP Cycle counts<br>Byte #3 EVP Cycle counts<br>Byte #4 EVP Cycle counts (Low Byte) | $00 00 00 00 -<br>$FF FF FF FF<br>Min physical: 0<br>Max physical: 20.000.000<br>Min value numerical: 0<br>Max value physical:<br>20.000.000<br>Internal resolution: 1 | | |

## 3.3.6. Service $28 – Communication Control

### 3.3.6.1. Description

The purpose of this service is to switch on/ off the transmission of ECU messages (e.g. application communication messages)

The ECU is enabling the transmission of CAN-messages when switching the ECU to the Default



© This document is the exclusive property of Robert Bosch GmbH. Without their consent it may not be reproduced or given to third parties.
If printed this is a uncontrolled document. The user must verify it is an authorized edition prior to use.

Session (by Service Start Default Diagnostic Session, ECU Reset or P3-Timeout)

### 3.3.6.2. Availability

| | | |
|---|---|---|
| **Supported Diagnostic Sessions** | | defaultSession |
| | **X** | extendedDiagnosticSession |
| **Supported Addressing Modes** | **X** | physical |
| | **X** | functional |

### 3.3.6.3. Request Message

| Byte | Bit | Description | Value + Unit | LSB | Offset |
|---|---|---|---|---|---|
| 1 | | Request Service Id = [CommunicationControl] | $28 | | |
| 2 | 0-6 | Subfunction<br>*Control Type*<br>[00h] = EnableRxAndEnableTx<br>[01h] = EnableRxAndDisableTx | | | |
| | 7 | Suppress Positive Response Message Indication Bit<br>[00h] = ECU is sending a positive response message<br>[01h] = ECU is not sending a positive response message | | | |
| 3 | 0 | *Communication Type*<br>Normal Communication Messages<br>[01h]= Disable normal communication message with control type (Byte2) equal to [00h]<br>[01h]= Enable normal communication message with control type (Byte2) equal to [01h] | | | |
| | 1-7 | Reserved (set to zero) | | | |

### 3.3.6.4. Response Message

| Byte | Bit | Description | Value + Unit | LSB | Offset |
|---|---|---|---|---|---|
| 1 | | Response Service Id = [Write Data By Identifier] | $68 | | |
| 2 | | Control Type | $xx | | |

### 3.3.6.5. Negative Response Codes

| Value | Description |
|---|---|
| $12 | Subfunction not supported |
| $13 | Incorrect Message Length |
| $31 | Request Out Of Range |
| $7F | Service Not Supported in Active Session |



© This document is the exclusive property of Robert Bosch GmbH. Without their consent it may not be reproduced or given to third parties.
If printed this is a uncontrolled document. The user must verify it is an authorized edition prior to use.

## 3.3.7. Service $2E – WriteDataByIdentifier

### 3.3.7.1. Description

This service allows the diagnostic tool to write data records into the ECU identified by Record Data Identifiers. The client request message contains one 2-byte Data Identifier values that identifies the requested Data Record.

### 3.3.7.2. Availability

| | | |
|---|---|---|
| **Supported Diagnostic Sessions** | | defaultSession |
| | **X** | extendedDiagnosticSession |
| **Supported Addressing Modes** | **X** | physical |
| | | functional |

### 3.3.7.3. Request Message

Refer to the subsection for each identifier for further details.

### 3.3.7.4. Response Message

| Byte | Bit | Description | Value + Unit | LSB | Offset |
|---|---|---|---|---|---|
| 1 | | Response Service Id = [Write Data By Identifier] | $6E | | |
| 2..3 | | Identifier | $xxxx | | |

### 3.3.7.5. Negative Response Codes

| Value | Description |
|---|---|
| $13 | Incorrect Message Length |
| $22 | Conditions not correct (Error by writing into EEPROM) |
| $31 | Request Out Of Range |
| $78 | Request Correctly Received – Response Pending |

–



© This document is the exclusive property of Robert Bosch GmbH. Without their consent it may not be reproduced or given to third parties.
If printed this is a uncontrolled document. The user must verify it is an authorized edition prior to use.

### 3.3.7.6. Identifier $FD05 – EVP Life Time Coding

This identifier writes the EVP (electric vacuum pump) life time data from the EEPROM. Refer to service ID $22 for reading the data of this identifier. A range of 8 bytes of EEPROM is reserved, which allows storing the life time data coding in HEX format.

| Byte | Bit | Description | Value + Unit | LSB | Offset |
|---|---|---|---|---|---|
| 1 | | Request Service Id = [Write Data By Identifier] | $2E | | |
| 2..3 | | Identifier = [EVPLifeTimeCoding] | $FD05 | | |
| 4 ... 7 | | Byte 4: Electric Vacuum Pump Run Time (High Byte)<br>...<br>Byte 7: Electric Vacuum Pump Run Time (Low byte) | 1 Bit → 20 [ms] | | |
| 8…11 | | Byte 8: Electric Vacuum Pump Cycle counter (High Byte)<br>...<br>Byte 11: Electric Vacuum Pump Cycle counter (Low Byte) | 1 Bit -> 1 Cycle | | |

*Hint*: to reset the pump life time data set the run time and the working cycle counter to zero. A negative response "Out of Range" ($31) is set in case the set values are bigger than the limit values: 1,000 Hours for the EVP run time (in hex format 0xD693A400) and 20xE6 cycles (in hex format 0x1312D00).

### 3.3.7.7. Identifier $F212 –Vehicle Performance Configuration

This identifier writes the vehicle performance into the EEPROM. The configured vehicle performance is received by the ESP over the CAN bus (CAN signal *GTW_performanceConfig*). Refer to service ID $22 for reading the value of this identifier ($F212). A range of 1 byte of EEPROM is reserved, which allows storing the vehicle performance. The application SW (ASW) uses this value for selecting the parameters for the brake and dynamical controllers according with the configured vehicle.

| Byte | Bit | Description | Value + Unit | LSB | Offset |
|---|---|---|---|---|---|
| 1 | | Request Service Id = [Write Data By Identifier] | $2E | | |
| 2..3 | | Identifier = [VehiclePerformanceConfiguration] | $F212 | | |

*Hint*: Note that there is no extra parameters in the diagnostic request just the identifier $F212. By using the $F212 write-command the diagnostics SW will save the received *GTW_performanceConfig* into the EEPROM. Additionally it is important to mention that it will be saved into EEPROM only a valid received performance value. Valid values are:

- *GTW_performanceConfig: 0x01 → 400 Nm Vehicle, and*
- *GTW_performanceConfig: 0x02 → 600 Nm Vehicle*

If an invalid value or no value is received and the write-command $F212 is requested, then the diagnostic SW sends negative response *"$22 Conditions not correct"*.

In order a new vehicle configuration in the ESP is activated it is required a cycle ignition.



© This document is the exclusive property of Robert Bosch GmbH. Without their consent it may not be reproduced or given to third parties.
If printed this is a uncontrolled document. The user must verify it is an authorized edition prior to use.

## 3.3.8. Service $2F – Input Output Control By Identifier

### 3.3.8.1. Description

The service Input Output Control By Local Identifier is used by the diagnostic tool to substitute a value for an input signal and / or control an output (actuator) of the ECU.

### 3.3.8.2. Availability

| | | |
|---|---|---|
| **Supported Diagnostic Sessions** | | defaultSession |
| | **X** | extendedDiagnosticSession |
| **Supported Addressing Modes** | **X** | physical |
| | | functional |

### 3.3.8.3. Request Message

Refer to the subsection for each identifier for further details.

### 3.3.8.4. Negative Response Codes

| Value | Description |
|---|---|
| $13 | Incorrect Message Length |
| $31 | Request Out Of Range |
| $7F | Service Not Supported in Active Session |

### 3.3.8.5. Control Type 00h - Return Control To ECU

#### 3.3.8.5.1. Positive Response Message

| Byte | Bit | Description | Value + Unit |
|---|---|---|---|
| 1 | | Positive Response Service Id = [Input Output Control By Identifier] | $6F |
| 2<br>3 | | Data Identifier<br>Byte #1 Data Identifier High Byte<br>Byte #2 Data Identifier Low Byte | $00-FF<br>$00-FF |
| 4 | | Input Output: ***Control Type***:<br>[00]: [Return Control To ECU]<br>[03]: Short term adjustment | $00 |



© This document is the exclusive property of Robert Bosch GmbH. Without their consent it may not be reproduced or given to third parties.
If printed this is a uncontrolled document. The user must verify it is an authorized edition prior to use.

### 3.3.8.5.2. Identifier D00Dh - Electrical Vacuum Pump

| Byte | Bit | Description | Coding | Hex |
|---|---|---|---|---|
| 1 | | Request Service Id = [Input Output Control By Identifier] | Hex | 2F |
| 2<br>3 | | Data Identifier = [Electrical Vacuum Pump]<br>Byte #1 Data Identifier High Byte<br>Byte #2 Data Identifier Low Byte | Hex | D0<br>0D |
| 4 | | Input Output Control Type = [Return Control To ECU] | Hex | 00 |

## *3.3.8.6. Control Type 03h - Short Term Adjustment*

### 3.3.8.6.1. Positive Response Message

| Byte | Bit | Description | Value + Unit |
|---|---|---|---|
| 1 | | Positive Response Service Id = [Input Output Control By Identifier] | $6F |
| 2<br>3 | | Data Identifier<br>Byte #1 Data Identifier High Byte<br>Byte #2 Data Identifier Low Byte | $00-FF<br>$00-FF |
| 4 | | Input Output Control Type = [Short Term Adjustment] | $03 |

### 3.3.8.6.2. Identifier D00Dh - Electrical Vacuum Pump

| Byte | Bit | Description | Coding | Hex |
|---|---|---|---|---|
| 1 | | Request Service Id = [Input Output Control By Identifier] | Hex | 2F |
| 2<br>3 | | Data Identifier = [Electrical Vacuum Pump]<br>Byte #1 Data Identifier High Byte<br>Byte #2 Data Identifier Low Byte | Hex | D0<br>0D |
| 4 | | Input Output Control Type = [Short Term Adjustment] | Hex | 03 |
| 5 | 0<br><br>1-7 | Electrical Vacuum Pump:<br>[00h] = disable<br>[01h] = enable<br>Reserved (set to zero) | Hex | 00-01 |



© This document is the exclusive property of Robert Bosch GmbH. Without their consent it may not be reproduced or given to third parties.
If printed this is a uncontrolled document. The user must verify it is an authorized edition prior to use.

## 3.3.9. Service $31 – RoutineControl

### 3.3.9.1. Description

The Routine Control service is used by a diagnostic tool to start a routine, to stop a routine and to request the routine results.

Note that the actual description of the end-of-line testing, evacuation/filling and repair bleeding sequences are described in separate documents, provided by CC/ESU1.

### 3.3.9.2. Availability

| | | |
|---|---|---|
| **Supported Diagnostic Sessions** | | defaultSession |
| | **X** | extendedDiagnosticSession |
| **Supported Addressing Modes** | **X** | physical |
| | | functional |

### 3.3.9.3. Request Message

Refer to the sub-sections for each routine control type and identifier for details.

| Sub-Function | Description |
|---|---|
| $01 | Start a routine |
| $02 | Stop a routine |
| $03 | Get the result or state of a routine |

Following routines are supported for the TESLA S model.

| Routine ID | Description |
|---|---|
| $F000 | Evac and Fill |
| $F001 | Repair bleed |
| $F002 | Wheel speed sensor test |
| $F003 | Static test |
| $F00A | Actuator test |
| $F150 | Roller test bench |
| $0404 | VIN storage |
| $F102 | VIN reset |

### 3.3.9.4. Response Message

Refer to the sub-sections for each routine control type and identifier for details.

### 3.3.9.5. Negative Response Codes

| Value | Description |
|---|---|
| $12 | Sub Function Not Supported |
| $13 | Incorrect Message Length |
| $22 | Conditions Not Correct |
| $24 | Request Sequence Error |
| $31 | Request Out Of Range |



© This document is the exclusive property of Robert Bosch GmbH. Without their consent it may not be reproduced or given to third parties.
If printed this is a uncontrolled document. The user must verify it is an authorized edition prior to use.

| | |
|---|---|
| $78 | Request Correctly Received – Response Pending |

### *3.3.9.6. Routine Control Type $01 – Start Routine*

#### 3.3.9.6.1. Response Message

| Byte | Bit | Description | Value + Unit | LSB | Offset |
|---|---|---|---|---|---|
| 1 | | Response Service Id = [Routine Control] | $71 | | |
| 2 | | Sub Function = [Start Routine] | $01 | | |
| 3..4 | | Routine Identifier | $xxxx | | |
| 5 | | Routine Status Byte | $01 = start successful<br>$02 = already started<br>$03 = start not possible<br>*Following states are only used if no RequestRoutineResult identifier is supported:*<br>$04 = finished<br>$05 = routine error | | |

#### 3.3.9.6.2. Identifier $F000 – EvacAndFill

| Byte | Bit | Description | Value + Unit | LSB | Offset |
|---|---|---|---|---|---|
| 1 | | Request Service Id = [Routine Control] | $31 | | |
| 2 | 0..6 | Sub Function = [Start Routine] | $01 | | |
| | 7 | Suppress Positive Response Bit | 0 = ECU is sending a positive response<br>1 = ECU is not sending a positive response | | |
| 3..4 | | Routine Identifier = [EvacAndFill] | $F000 | | |
| 5 | | Evac and fill time<br>Format: 1 Bit = 1s (unsigned Hex)<br>Range: 1s … 150s (01h ... 96h) | $01-$96 | 1 | 0 |
| 6 | | Time until start of pump motor<br>Resolution: 1 Bit = 1s (unsigned Hex)<br>Range:: [01h ... FEh] = 1 … 254s<br>[00h] = 1s<br>[FFh] = “Pump motor is not running” | $00-$FF | 1 | 0 |

<u>Evac and fill time</u>
After evac and filling time, the pump motor will run for 2 additional seconds, if the delay time in byte 6 is not $FF.



© This document is the exclusive property of Robert Bosch GmbH. Without their consent it may not be reproduced or given to third parties.
If printed this is a uncontrolled document. The user must verify it is an authorized edition prior to use.

### 3.3.9.6.3. Identifier $F001 – RepairBleed

| Byte | Bit | Description | Value + Unit | LSB | Offset |
|---|---|---|---|---|---|
| 1 | | Request Service Id = [Routine Control] | $31 | | |
| 2 | 0..6 | Sub Function = [Start Routine] | $01 | | |
| | 7 | Suppress Positive Response Bit | 0 = ECU is sending a positive response<br>1 = ECU is not sending a positive response | | |
| 3..4 | | Routine Identifier = [RepairBleed] | $F001 | | |
| 5 | | Repair bleeding phase<br>[01h] = EOL Repair Bleeding Phase 1<br>[02h] = EOL Repair Bleeding Phase 2<br>[03h] = EOL Repair Bleeding Phase 3<br>[04h] = EOL Repair Bleeding Phase 4 | 1 .. 4 | | |
| 6 | | Repetition counter<br>[03h] = 3 repetitions<br>[04h] = 4 repetitions<br>[05h] = 5 repetitions<br>This Parameter is always required, but only valid for Phase 3, 4 | 3 .. 5 | | |

Repair bleeding phase
The Repair Bleeding function should always be executed in increasing phase sequence starting with Phase 1. A repetition of the same phase is allowed, but no phase shall be skipped. If this is not assured, the pump might be damaged due to dry run.

Repetition counter
This parameter defines the number of inner loop repetitions in phase 3 and 4. This Parameter is always required, but only valid for Phase 3, 4. For other phases, it is ignored.

### 3.3.9.6.4. Identifier $F002 – WheelSpeedSensorTest

The “Wheel Speed Sensor Test” is used to check the correct connection, correlation and function of the wheel speed sensors as well as a damaged multi pole wheel. A wrong air gap or eccentricity will also be detected. The test can be executed for both acceleration and deceleration. No valve or pump actuation is performed.

The “Wheel Speed Sensor Test” requires a brake dynamometer with the possibility to actuate each wheel on the test bench. The test duration is set to 10 [s]. At the beginning, the vehicle is at standstill in a low speed dynamometer. The test bench accelerates one wheel or more of the vehicle to a minimum speed.

The wheel speed sensor test routine is started and the ECU samples the maximum positive difference in speed of all sensors during the given test duration [10s]. *VStopp* (Byte 5 and 6) indicates a maximal speed value in case of acceleration phase was selected (Byte 7) or a minimal value in case of deceleration. At least one wheel speed should be greater/lesser than the specified stop speed.

| Byte | Bit | Description | Value + Unit | LSB | Offset |
|---|---|---|---|---|---|
| 1 | | Request Service Id = [Routine Control] | $31 | | |
| 2 | 0..6 | Sub Function = [Start Routine] | $01 | | |
| | 7 | Suppress Positive Response Bit | 0 = ECU is sending a | | |



© This document is the exclusive property of Robert Bosch GmbH. Without their consent it may not be reproduced or given to third parties.
If printed this is a uncontrolled document. The user must verify it is an authorized edition prior to use.

| Byte | Bit | Description | Value + Unit | LSB | Offset |
|---|---|---|---|---|---|
| | | | positive response<br>1 = ECU is not sending a positive response | | |
| 3..4 | | Routine Identifier = [WheelSpeedSensorTest] | $F002 | | |
| 5 .. 6 | | *VStopp*<br>Format 1 Bit = 0,01km/h (Unsigned Hex)<br>Range: 0km/h ... 655,35km/h (theoretically)<br>[0000h ... FFFFh] | $00-$FF | 0,01 km/h | 0 |
| 7 | | *Testing Phase*<br>Format [00h] = Deceleration; [01h] = Acceleration | $00-$01 | | |

### 3.3.9.6.5. Identifier $F003 - StaticTest

| Byte | Bit | Description | Value + Unit | LSB | Offset |
|---|---|---|---|---|---|
| 1 | | Request Service Id = [Routine Control] | $31 | | |
| 2 | 0..6 | Sub Function = [Start Routine] | $01 | | |
| | 7 | Suppress Positive Response Bit | 0 = ECU is sending a positive response<br>1 = ECU is not sending a positive response | | |
| 3..4 | | Routine Identifier = [StaticTest] | $F003 | | |



© This document is the exclusive property of Robert Bosch GmbH. Without their consent it may not be reproduced or given to third parties.
If printed this is a uncontrolled document. The user must verify it is an authorized edition prior to use.

### 3.3.9.6.6. Identifier $F00A– Actuator Test

The Actuator Test will be used to check the hydraulic connections, the tightness and correlation of the valves, the function of the pump and the air in the brake system. This test controls up to 4 actuators according to the actuation pattern shown below.

The actuator value must have a value between 0 – 100%. Values above this range are not accepted and test will not be executed (Negative response with value $31 "*RequestOutofRange*"). The execution time is limited to 5.46 [min] or a hex value of 0x7FFF

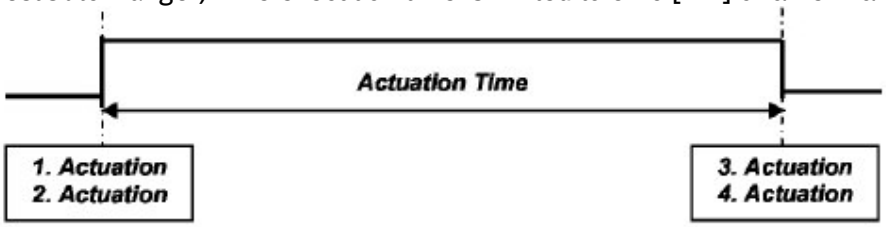


| Byte | Bit | Description | | Coding | Hex Val |
|---|---|---|---|---|---|
| 1 | | Request Service Id = [Routine Control] | | | 31 |
| 2 | | Sub Function<br>Routine Control Type<br>[01h] = Start Routine | | | 01 |
| | | Routine Identifier = [Actuator Test] | | | |
| 3 | | Byte #1 | Routine Identifier High Byte | Hex | F0 |
| 4 | | Byte #2 | Routine Identifier Low Byte | Hex | 0A |
| | | Actuation 1 | | | |
| 5 | | Byte #1 | Actuator 1 Value High Byte | Hex | 00-00 |
| 6 | | Byte #2 | Actuator 1 Value Low Byte | Hex | 00-64 |
| 7 | | Byte #3 | Actuator 1 Identifier High Byte | Hex | 00-FF |
| 8 | | Byte #4 | Actuator 1 Identifier Low Byte | Hex | 00-FF |
| | | Actuation 2 | | | |
| 9 | | Byte #1 | Actuator 2 Value High Byte | Hex | 00-00 |
| 10 | | Byte #2 | Actuator 2 Value Low Byte | Hex | 00-64 |
| 11 | | Byte #3 | Actuator 2 Identifier High Byte | Hex | 00-FF |
| 12 | | Byte #4 | Actuator 2 Identifier Low Byte | Hex | 00-FF |
| | | Actuation Time | | | |
| 13 | | Byte #1 | Actuation Time High Byte | Hex | 00-FF |
| 14 | | Byte #2 | Actuation Time Low Byte | Hex | 00-FF |
| | | Format | 1 Bit = 10 ms (Unsigned Hex) | | |
| | | Range: | 10 ms ... 327,67 s [0001h ... 7FFFh]<br>other values are undefined! | | |
| | | Actuation 3 | | | |
| 15 | | Byte #1 | Actuator 3 Value High Byte | Hex | 00-00 |
| 16 | | Byte #2 | Actuator 3 Value Low Byte | Hex | 00-64 |
| 17 | | Byte #3 | Actuator 3 Identifier High Byte | Hex | 00-FF |
| 18 | | Byte #4 | Actuator 3 Identifier Low Byte | Hex | 00-FF |
| | | Actuation 4 | | | |
| 19 | | Byte #1 | Actuator 4 Value High Byte | Hex | 00-00 |
| 20 | | Byte #2 | Actuator 4 Value Low Byte | Hex | 00-64 |
| 21 | | Byte #3 | Actuator 4 Identifier High Byte | Hex | 00-FF |
| 22 | | Byte #4 | Actuator 4 Identifier Low Byte | Hex | 00-FF |



© This document is the exclusive property of Robert Bosch GmbH. Without their consent it may not be reproduced or given to third parties.
If printed this is a uncontrolled document. The user must verify it is an authorized edition prior to use.

To find the actuator list with the corresponding actuator identifiers see the "*actuator table*" in section 3.6

### 3.3.9.6.7. Identifier $F150– Roller Test Bench (DynoMode)

With this routine the systems changes to roller test modus (*Dyno Mode*) and a test of a vehicle in a roller bench is possible. While the Roller Test Bench is active, the ESP system will react as described in the TESLA specification "Stability Control Firmware Specification" version 09/07/2011. Implemented requirements are S-VE-ECU-157 to S-VE-ECU-167.

| Byte | Bit | Description | Value + Unit | LSB | Offset |
|---|---|---|---|---|---|
| 1 | | Request Service Id = [Routine Control] | $31 | | |
| 2 | 0..6 | Sub Function = [Start Routine] | $01 | | |
| | 7 | Suppress Positive Response Bit | 0 = ECU is sending a positive response<br>1 = ECU is not sending a positive response | | |
| 3..4 | | Routine Identifier = [RollerTestBench] | $F150 | | |

### 3.3.9.6.8. Identifier $0404– VIN Storage Routine

By starting this routine a received VIN will be written into the EEPROM. To store the VIN certain conditions must be filled like a valid VIN has to been received and no VIN was previously stored. The routine response will deliver the result of storing the VIN. This routine reacts as described in the TESLA specification "Stability Control Firmware Specification" version 09/07/2011. Implemented requirements are S-VE-ECU-172 to S-VE-ECU-173.

| Byte | Bit | Description | Value + Unit | LSB | Offset |
|---|---|---|---|---|---|
| 1 | | Request Service Id = [Routine Control] | $31 | | |
| 2 | 0..6 | Sub Function = [Start Routine] | $01 | | |
| | 7 | Suppress Positive Response Bit | 0 = ECU is sending a positive response<br>1 = ECU is not sending a positive response | | |
| 3..4 | | Routine Identifier = [VINStorageRoutine] | $0404 | | |

Positive Response to routine $0404

| Byte | Bit | Description | Value + Unit | LSB | Offset |
|---|---|---|---|---|---|
| 1 | | Request Service Id = [Routine Control] | $71 | | |
| 2 | | Sub Function = [Start Routine] | $01 | | |
| 3..4 | | Routine Identifier = [RollerTestBench] | $0404 | | |
| 5 | | Routine state result:<br>00: Routine Passed - VIN Stored<br>01: Specified VIN (From Car Configuration) Already Stored<br>02: Different VIN (From Car Configuration) Already Stored<br>03: Invalid VIN Received From Car Configuration<br>04: Test Timed Out Or Stopped Before VIN Received<br>05: Internal Storage Problem (e.g. EEPROM error)<br>FE: No fail Reason Available Or Unspecified Fail Reason | $xx | | |



© This document is the exclusive property of Robert Bosch GmbH. Without their consent it may not be reproduced or given to third parties.
If printed this is a uncontrolled document. The user must verify it is an authorized edition prior to use.

#### 3.3.9.6.9. Identifier $F102– Reset VIN

With this routine the stored VIN in EEPROM can be erased.

| Byte | Bit | Description | Value + Unit | LSB | Offset |
|---|---|---|---|---|---|
| 1 | | Request Service Id = [Routine Control] | $31 | | |
| 2 | 0..6 | Sub Function = [Start Routine] | $01 | | |
| | 7 | Suppress Positive Response Bit | 0 = ECU is sending a positive response<br>1 = ECU is not sending a positive response | | |
| 3..4 | | Routine Identifier = [VINResetRoutine] | $F102 | | |

### *3.3.9.7. Routine Control Type $02 - Stop Routine*

#### 3.3.9.7.1. Request Message

| Byte | Bit | Description | Value + Unit | LSB | Offset |
|---|---|---|---|---|---|
| 1 | | Request Service Id = [Routine Control] | $31 | | |
| 2 | 0..6 | Sub Function = [Start Routine] | $02 | | |
| | 7 | Suppress Positive Response Bit | 0 = ECU is sending a positive response<br>1 = ECU is not sending a positive response | | |
| 3..4 | | Routine Identifier | $F000 = EvacFill<br>$F001 = RepairBleed<br>$F002 = WSSTest<br>$F003 = StaticTest<br>$F00A = ActuatorTest<br>$F150 = Roller Bench | | |

#### 3.3.9.7.2. Response Message

| Byte | Bit | Description | Value + Unit | LSB | Offset |
|---|---|---|---|---|---|
| 1 | | Response Service Id = [Routine Control] | $71 | | |
| 2 | | Sub Function = [Start Routine] | $02 | | |
| 3..4 | | Routine Identifier | $xxxx | | |
| 5 | | Routine Status Byte | $01 = stop successful<br>$02 = already stopped or not started<br>$03 = routine stopped abnormally | | |



© This document is the exclusive property of Robert Bosch GmbH. Without their consent it may not be reproduced or given to third parties.
If printed this is a uncontrolled document. The user must verify it is an authorized edition prior to use.

### *3.3.9.8. Routine Control Type $03 - Request Routine Results*

#### 3.3.9.8.1. Request Message

| Byte | Bit | Description | Value + Unit | LSB | Offset |
|---|---|---|---|---|---|
| 1 | | Request Service Id = [Routine Control] | $31 | | |
| 2 | 0..6 | Sub Function = [RoutineResult] | $03 | | |
| | 7 | Suppress Positive Response Bit | 0 = ECU is sending a positive response<br>1 = ECU is not sending a positive response | | |
| 3..4 | | Routine Identifier | $xxxx | | |

#### 3.3.9.8.2. Identifier $F000 - EvacAndFill

| Byte | Bit | Description | Value + Unit | LSB | Offset |
|---|---|---|---|---|---|
| 1 | | Response Service Id = [Routine Control] | $71 | | |
| 2 | | Sub Function = [RoutineResult] | $03 | | |
| 3..4 | | Routine Identifier = [EvacAndFill] | $F000 | | |
| 5 | | Routine Status Byte | 01 = finished<br>02 = still running<br>03 = Routine canceled by ECU<br>04 = Routine Identifier not correct<br>05 = Routine cancelled by Tester<br>06 = Routine was not started | | |

#### 3.3.9.8.3. Identifier $F001 - RepairBleed

| Byte | Bit | Description | Value + Unit | LSB | Offset |
|---|---|---|---|---|---|
| 1 | | Response Service Id = [Routine Control] | $71 | | |
| 2 | | Sub Function = [RoutineResult] | $03 | | |
| 3..4 | | Routine Identifier = [RepairBleed] | $F001 | | |
| 5 | | Routine Status Byte | 01 = finished<br>02 = still running<br>03 = Routine canceled by ECU<br>04 = Routine Identifier not correct<br>05 = Routine cancelled by Tester<br>06 = Routine was not started | | |



© This document is the exclusive property of Robert Bosch GmbH. Without their consent it may not be reproduced or given to third parties.
If printed this is a uncontrolled document. The user must verify it is an authorized edition prior to use.

### 3.3.9.8.4. Identifier $F002 - WheelSpeedSensorTest

| Byte | Bit | Description | Value + Unit |
|---|---|---|---|
| 1 | | Response Service Id = [Routine Control] | $71 |
| 2 | | Sub Function = [ RoutineResult] | $03 |
| 3..4 | | Routine Identifier = [WheelSpeedSensorTest] | $F002 |
| 5 | | Routine Status Byte | 01 = finished<br>02 = still running<br>03 = Routine canceled by ECU<br>04 = Routine Identifier not correct<br>05 = Routine cancelled by Tester<br>06 = Routine was not started |
| 6 .. 7 | | Vst FL (measured start speed)<br>Byte #1 High Byte<br>Byte #2 Low Byte<br>Format 1 Bit = 0,01km/h (Unsigned Hex)<br>Range: 0km/h ... 655,35km/h<br>(theoretically)[0000h ... FFFFh]<br>Wheel Speed Front Left, maximum | 00-FFFF |
| 8 .. 9 | | Vst FR (measured start speed)<br>Byte #1 High Byte<br>Byte #2 Low Byte<br>Format 1 Bit = 0,01km/h (Unsigned Hex)<br>Range: 0km/h ... 655,35km/h<br>(theoretically)[0000h ... FFFFh]<br>Wheel Speed Front Left, minimum | 00-FFFF |
| 10 .. 11 | | Vst RL (measured start speed)<br>Byte #1 High Byte<br>Byte #2 Low Byte<br>Format 1 Bit = 0,01km/h (Unsigned Hex)<br>Range: 0km/h ... 655,35km/h<br>(theoretically)[0000h ... FFFFh]<br>Wheel Speed Front Right, maximum | 00-FFFF |
| 12 .. 13 | | Vst RR (measured start speed)<br>Byte #1 High Byte<br>Byte #2 Low Byte<br>Format 1 Bit = 0,01km/h (Unsigned Hex)<br>Range: 0km/h ... 655,35km/h<br>(theoretically)[0000h ... FFFFh<br>]Wheel Speed Front Right, minimum | 00-FFFF |
| 14 .. 15 | | dV FL (max positive difference speed)<br>Byte #1 High Byte<br>Byte #2 Low Byte<br>Format 1 Bit = 0,01km/h (Unsigned Hex)<br>Range: 0km/h ... 655,35km/h<br>(theoretically)[0000h ... FFFFh]<br>Wheel Speed Rear Left, maximum | 00-FFFF |
| 16 .. 17 | | dV FR (max positive difference speed)<br>Byte #1 High Byte<br>Byte #2 Low Byte<br>Format 1 Bit = 0,01km/h (Unsigned Hex)<br>Range: 0km/h ... 655,35km/h<br>(theoretically)[0000h ... FFFFh<br>Wheel Speed Rear Left, minimum | 00-FFFF |
| 18 .. 19 | | dV RL (max positive difference speed)<br>Byte #1 High Byte<br>Byte #2 Low Byte<br>Format 1 Bit = 0,01km/h (Unsigned Hex)<br>Range: 0km/s ... 655,35km/s<br>(theoretically)[0000h ... FFFFh]<br>Wheel Speed Rear Right, maximum | 00-FFFF |
| 20 .. 21 | | dV RR (max positive difference speed)<br>Byte #1 High Byte | 00-FFFF |



© This document is the exclusive property of Robert Bosch GmbH. Without their consent it may not be reproduced or given to third parties.
If printed this is a uncontrolled document. The user must verify it is an authorized edition prior to use.

| | | | |
|---|---|---|---|
| | | Byte #2 Low Byte<br>Format 1 Bit = 0,01km/h (Unsigned Hex)<br>Range: 0km/h ... 655,35km/h<br>(theoretically)[0000h ... FFFFh]<br>Wheel Speed Rear Right, minimum | |

### 3.3.9.8.5. Identifier $F003 - StaticTest

| Byte | Bit | Description | Value + Unit | LSB | Offset |
|---|---|---|---|---|---|
| 1 | | Response Service Id = [Routine Control] | $71 | | |
| 2 | | Sub Function = [RoutineResult] | $03 | | |
| 3..4 | | Routine Identifier = [DynamicTest] | $F003 | | |
| 5 | | Routine Status Byte | 01 = finished<br>02 = still running<br>03 = Routine canceled by ECU<br>04 = Routine Identifier not correct<br>05 = Routine cancelled by Tester<br>06 = Routine was not started | | |

### 3.3.9.8.6. Identifier $F00A– ActuatorTest

| Byte | Bit | Description | Value + Unit | LSB | Offset |
|---|---|---|---|---|---|
| 1 | | Response Service Id = [Routine Control] | $71 | | |
| 2 | | Sub Function = [RoutineResult] | $03 | | |
| 3..4 | | Routine Identifier = [ActuatorTest] | $F00A | | |
| 5 | | Routine Status Byte | 01 = finished<br>02 = still running<br>03 = Routine canceled by ECU<br>04 = Routine Identifier not correct<br>05 = Routine cancelled by Tester<br>06 = Routine was not started | | |

### 3.3.9.8.7. Identifier $F150 – Roller Test Bench

| Byte | Bit | Description | Value + Unit | LSB | Offset |
|---|---|---|---|---|---|
| 1 | | Response Service Id = [Routine Control] | $71 | | |
| 2 | | Sub Function = [RoutineResult] | $03 | | |
| 3..4 | | Routine Identifier = [ActuatorTest] | $F150 | | |
| 5 | | Routine Status Byte | 01 = Test Bench Modus (Dyno Mode) active<br>06 = Test Bench Modus (Dyno Mode) not activate | | |



© This document is the exclusive property of Robert Bosch GmbH. Without their consent it may not be reproduced or given to third parties.
If printed this is a uncontrolled document. The user must verify it is an authorized edition prior to use.

### 3.3.10. Service $3E - TesterPresent

#### 3.3.10.1. Description

This service is used to indicate to an ECU that the diagnostic tool is still connected to the vehicle and that diagnostic sessions are to remain active.

#### 3.3.10.2. Availability

| | | |
|---|---|---|
| **Supported Diagnostic Sessions** | **X** | defaultSession |
| | **X** | extendedDiagnosticSession |
| **Supported Addressing Modes** | **X** | physical |
| | **X** | functional |

#### 3.3.10.3. Request Message

| Byte | Bit | Description | Value + Unit | LSB | Offset |
|---|---|---|---|---|---|
| 1 | | Request Service Id = [Tester Present] | $3E | | |
| 2 | 0..6 | Sub Function = [Zero Sub Function] | $00 | | |
| | 7 | Suppress Positive Response Bit | 0 = ECU is sending a positive response<br>1 = ECU is not sending a positive response | | |

#### 3.3.10.4. Response Message

| Byte | Bit | Description | Value + Unit | LSB | Offset |
|---|---|---|---|---|---|
| 1 | | Response Service Id = [Tester Present] | $7E | | |
| 2 | | Sub Function = [Zero Sub Function] | $00 | | |

#### 3.3.10.5. Negative Response Codes

| Value | Description |
|---|---|
| $12 | Sub Function Not Supported |
| $13 | Incorrect Message Length |



© This document is the exclusive property of Robert Bosch GmbH. Without their consent it may not be reproduced or given to third parties.
If printed this is a uncontrolled document. The user must verify it is an authorized edition prior to use.

## 3.3.11. Service $7F - Negative Response

### 3.3.11.1. Description

This section does not describe a diagnostic service itself, but provides additional details about the used negative response codes.

### 3.3.11.2. Response Message

| Byte | Bit | Description | Value + Unit | LSB | Offset |
|---|---|---|---|---|---|
| 1 | | Response Service Id = [Negative Response] | $7F | | |
| 2 | | Request Service ID | $xx | | |
| 3 | | Negative Response Code | $xx | | |

### 3.3.11.3. Negative Response Codes

| Negative Response Codes | |
|---|---|
| 11h | **Service Not Supported**<br>This response code indicates that the requested action will not be taken because the ECU does not support the requested service |
| 12h | **Sub Function Not Supported**<br>This response code indicates that the requested action will not be taken because the ECU does not support the requested sub function |
| 13h | **Incorrect Message Length or Invalid Format**<br>This response code indicates that the requested action will not be taken because the length of the received request message is incorrect |
| 22h | **Conditions Not Correct**<br>This response code indicates that the requested action will not be taken, because conditions are not correct or a time-out has appeared. |
| 24h | **RequestSequenceError**<br>This response code indicates that the requested action will not be taken because the server expects a different sequence of request messages or message to that sent by the client. This may occur when sequence-sensitive requests are issued in the wrong order. |
| 31h | **Request Out Of Range**<br>This response code indicates that the requested action will not be taken because the request has incorrect parameters |
| 78h | **Request Correctly Received – Response Pending**<br>This response code indicates, that the request message was received correctly and that all parameters in the request message are valid, but the request cannot be completed within P2_CAN_ECU_max. (e.g. Access of EEPROM data) |
| 7Fh | **Service Not Supported in Active Session**<br>This response code indicates that the requested action will not be taken because the ECU does not support the requested service in the current session. |



© This document is the exclusive property of Robert Bosch GmbH. Without their consent it may not be reproduced or given to third parties.
If printed this is a uncontrolled document. The user must verify it is an authorized edition prior to use.

## 3.3.12. Service $85 - ControlDTCSetting

### 3.3.12.1. Description

The ControlDTCSetting service is used by a diagnostic tool to stop or resume the setting of diagnostic trouble codes (DTC) in the ECU.

The ECU is enabling again the storage of DTCs when switching the ECU to default session (by Service Start Default Diagnostic Session, a reset of the ECU Reset or a P3-Timeout).

### 3.3.12.2. Availability

| | | |
|---|---|---|
| **Supported Diagnostic Sessions** | | defaultSession |
| | **X** | extendedDiagnosticSession |
| **Supported Addressing Modes** | **X** | physical |
| | **x** | functional |

### 3.3.12.3. Request Message

| Byte | Bit | Description | Value + Unit | LSB | Offset |
|---|---|---|---|---|---|
| 1 | | Request Service Id = [Control DTC Setting] | $85 | | |
| 2 | 0..6 | Sub Function = [DTC Setting Type] | $01 = on<br>$02 = off | | |
| | 7 | Suppress Positive Response Bit | 0 = ECU is sending a positive response<br>1 = ECU is not sending a positive response | | |

### 3.3.12.4. Response Message

| Byte | Bit | Description | Value + Unit | LSB | Offset |
|---|---|---|---|---|---|
| 1 | | Response Service Id = [Control DTC Setting] | $C5 | | |
| 2 | | Sub Function = [DTC Setting Type] | $xx | | |

### 3.3.12.5. Negative Response Codes

| Value | Description |
|---|---|
| $12 | Sub function not supported |
| $13 | Incorrect Message Length |



© This document is the exclusive property of Robert Bosch GmbH. Without their consent it may not be reproduced or given to third parties.
If printed this is a uncontrolled document. The user must verify it is an authorized edition prior to use.

## 3.4. Application: End-Of-Line Routines

Note that the actual description of the end-of-line testing, evacuation/filling and repair bleeding sequences are described in separate documents, provided by CC/ESU1.

### 3.4.1. Actuator Table

The following table lists the available actuator identifiers for service $31. In particular, they are relevant for the dynamic test.

| Control numbers | | Actuator digital/analog output | | |
|---|---|---|---|---|
| Dez. | Hex | Channel | Typ | Resolution/Remark |
| **0** | **0000H** | no actuation | | Dummy actuation for padding unused actuations |
| **34** | **0022H** | pump-motor relay (RFP) | Digital | Actuation pump-motor:<br>0064H = turn-on<br>00H = turn-off |
| **48** | **0030H** | EV front left (EVL) | Analog | ABS Valves front left (in/outlet) Actuation<br>0064H = turn-on<br>0000H = turn-off |
| **50** | **0032H** | AV front left (AVL) | Analog | |
| **52** | **0034H** | EV front right (EVR) | Analog | ABS Valves front right (in/outlet) Actuation<br>0064H = turn-on<br>0000H = turn-off |
| **54** | **0036H** | AV front right (AVR) | Analog | |
| **56** | **0038H** | EV rear right (EHR) | Analog | ABS Valves rear right (in/outlet) Actuation<br>0064H = turn-on<br>0000H = turn-off |
| **58** | **003AH** | AV rear right (AHR) | Analog | |
| **60** | **003CH** | EV rear left (EHL) | Analog | ABS Valves rear left (in/outlet) Actuation<br>0064H = turn-on<br>0000H = turn-off |
| **62** | **003EH** | AV rear left (AHL) | Analog | |
| **78** | **004EH** | Cut Valve 1 (USV1) | Analog | USV Valves Actuation<br>0064H = turn-on<br>0000H = turn-off |
| **80** | **0050H** | Cut Valve 2 (USV2) | Analog | |
| **82** | **0052H** | High pressure control valve 1 (HSV1) | Analog | HSV Valves Actuation<br>0064H = turn-on<br>0000H = turn-off |
| **84** | **0054H** | High pressure control valve 2 (HSV2) | Analog | |
| **98** | **0062H** | Disable Valve Overheating Protection | Digital | ECU internal Valve Overheating Protection:<br>0000H = protection on<br>00FFH = protection off |
| **100** | **0064H** | DisableVRShutdown | Digital | Valve Relay shutdown:<br>0000H = VR shutdown not disabled (strategy enabled)<br>00ABH = VR shutdown prohibited (strategy VR shutdown disabled) |
| **104** | **0068H** | Disable VLimit | Digital | Speed limit monitoring during diagnosis mode:<br>0000H = turn-off speed monitoring<br>0001H = turn-on speed monitoring |



© This document is the exclusive property of Robert Bosch GmbH. Without their consent it may not be reproduced or given to third parties.
If printed this is a uncontrolled document. The user must verify it is an authorized edition prior to use.

### 3.4.2. Actuation Limitations

Valves and pump motor are covered by protection measures to avoid destruction due to excessive actuation. In case the protection measures are triggered, a fault entry is stored in the fault memory to document the overheat situation.

Protections measures can be disabled by usage of actuator 0062h. Actuation of valves or pump with disabled protection measures may damage the brake system due to excess temperature or excess pressure conditions.Valves and pump motor are covered by protection measures to avoid destruction due to excessive actuation. In case the protection measures are triggered, a fault entry is stored in the fault memory to document the overheat situation.

Too short actuations of the pump motor shall be avoided. The minimum allowed control duration for the actuator “Pump Motor” is 20ms.

## 3.5. Application: Fault Memory

### 3.5.1. Diagnostic Trouble Codes

The DTC coding information is according to the format ISO14229-1DTCFormat, meaning there is no standardized decoding defined - instead the DTCs are defined as specified by the vehicle manufacturer.

The DTC code consists of 3 bytes. Middle and lower byte are used to determine the affected part of the system..

| DTC Code (High Byte) | DTC Code (Middle Byte) | DTC Code (Low Byte) |
|---|---|---|
| Three byte hexadecimal number indicating the affected part of the system.<br>DTC Failure Type Byte, containing DTC Failure Category and DTC Failure Subtype. | | |

The following table describes the middle and low byte of the DTC Code. The values have been chosen for the Chassis Group between $4xxxxx and $Cxxxxx.

| DTC (Hex value) (High, Middle and Low Byte) | Description |
|---|---|
| 0x00C44986 | Invalid Data Received From Gateway C: chassis type invalid value |
| 0x00C44981 | Invalid Data Received From Gateway C: Data Length Code, Checksum or Parity invalid (GTW_CarConfig) |
| 0x00C44881 | Invalid Data Received From Gateway B: Data Length Code, Checksum or Parity invalid |
| 0x00C44782 | Invalid Data Received From Gateway A: Alive Counter invalid |
| 0x00C44781 | Invalid Data Received From Gateway A: Data Length Code, Checksum or Parity invalid |
| 0x00C43286 | Invalid Data Received From Multi-axis Acceleration Sensor Module: Invalid Signal Status |
| 0x00C43281 | Invalid Data Received From Multi-axis Acceleration Sensor Module: Data Length Code, Checksum or Parity invalid |
| 0x00C42886 | Invalid Data Received From Steering Angle Sensor Module: Invalid Signal Status |
| 0x00C42882 | Invalid Data Received From Steering Angle Sensor Module: Alive Counter invalid |



© This document is the exclusive property of Robert Bosch GmbH. Without their consent it may not be reproduced or given to third parties.
If printed this is a uncontrolled document. The user must verify it is an authorized edition prior to use.

| | |
|---|---|
| 0x00C42881 | Invalid Data Received From Steering Angle Sensor Module: Data Length Code, Checksum or Parity invalid |
| 0x00C41186 | Invalid Data Received From Drive Motor Control Module A: Invalid Signal Status |
| 0x00C41182 | Invalid Data Received From Drive Motor Control Module A: Alive Counter invalid |
| 0x00C41181 | Invalid Data Received From Drive Motor Control Module A: Data Length Code, Checksum or Parity invalid |
| 0x00C14687 | Lost Communication With Gateway A: Message Timeout (GTW_ESP1) |
| 0x00C14787 | Lost Communication With Gateway A: Message Timeout (GTW_Odo) |
| 0x00C14887 | Lost Communication With Gateway A: Message Timeout (GTW_CarConfig) |
| 0x00C11087 | Lost Communication With Drive Motor Control Module A: Message Timeout |
| 0x00C12587 | Lost Communication With Multi-axis Acceleration Sensor Module: Message Timeout |
| 0x00B03700 | Vehicle Communication Bus B: General Fault |
| 0x00B02800 | Vehicle Communication Bus A: General Fault |
| 0x00B00100 | CAN Communication Bus: General Fault |
| 0x00530068 | Roller Bench Mode: Control Event Log |
| 0x00522087 | VIN-Message not received from Gateway |
| 0x00522081 | Invalid Data Received From Gateway (VIN-Message): Data Length Code, Checksum or Parity invalid |
| 0x00522062 | VIN: Received VIN does not match stored VIN |
| 0x00522051 | VIN not programmed |
| 0x00521062 | Reverse Gear Switch: Plausibility against second signal failed |
| 0x00520086 | Variant Management: Invalid Signal Status |
| 0x00513068 | HBA Controller: Control Event Log |
| 0x00512068 | ESP Controller: Control Event Log |
| 0x00511068 | TCS Controller: Control Event Log |
| 0x00510068 | ABS Controller: Control Event Log |
| 0x00502001 | Vacuum Sensor: General electrical failure |
| 0x00501084 | Electric vacuum pump: Signal below allowable range |
| 0x00501062 | Electric vacuum pump: Plausibility against second signal failed |
| 0x00501062 | Electric vacuum pump: Plausibility against second signal failed |
| 0x00406C49 | Stability System: Internal Electronic failure detected |
| 0x00406C17 | Stability System: Circuit voltage above threshold |
| 0x00406C16 | Stability System: Circuit Voltage below threshold |
| 0x00406B62 | Stability System Active Too Long: Plausibility against second signal failed |
| 0x00406328 | Yaw Rate Sensor: Adjustment not possible (Offset too large) |
| 0x00406327 | Yaw Rate Sensor: High gradient detected |
| 0x00406322 | Yaw Rate Sensor: Signal out of Range |
| 0x00406309 | Yaw Rate Sensor: Generic Component fault |
| 0x00406262 | Longitudinal Acceleration Sensor: Plausibility against second signal failed |
| 0x00406228 | Longitudinal Acceleration Sensor: Adjustment not possible (Offset too large) |
| 0x00406222 | Longitudinal Acceleration Sensor: Signal out of Range |
| 0x00406209 | Longitudinal Acceleration Sensor: Generic Component fault |
| 0x00406162 | Lateral Acceleration Sensor: Plausibility against second signal failed |
| 0x00406128 | Lateral Acceleration Sensor: Adjustment not possible (Offset too large) |
| 0x00406122 | Lateral Acceleration Sensor: Signal out of Range |
| 0x00406109 | Lateral Acceleration Sensor: Generic Component fault |
| 0x00405162 | Steering Wheel Position Sensor: Plausibility against second signal failed |
| 0x00405128 | Steering Wheel Position Sensor: Adjustment not possible (Offset too large) |
| 0x00405127 | Steering Wheel Position Sensor: High gradient detected |
| 0x00405126 | Steering Wheel Position Sensor: Constant signal detected |
| 0x00405122 | Steering Wheel Position Sensor: Signal out of Range |
| 0x0040497B | Brake Fluid: Fluid level low |
| 0x00404784 | Brake Booster Pressure Sensor: :Signal below allowable range |
| 0x00404462 | Brake Pressure Sensor A: Plausibility against second signal failed |
| 0x00404428 | Brake Pressure Sensor A: Adjustment not possible (Offset too large) |



© This document is the exclusive property of Robert Bosch GmbH. Without their consent it may not be reproduced or given to third parties.
If printed this is a uncontrolled document. The user must verify it is an authorized edition prior to use.

| | |
|---|---|
| 0x00404414 | Brake Pressure Sensor A: Line Short to Ground or Interruption |
| 0x00404062 | Brake Pedal Switch A: Plausibility against second signal failed |
| 0x00404024 | Brake Pedal Switch A: Signal stuck high |
| 0x00403D00 | Rear Wheel Speed Sensor: General Fault |
| 0x00403B12 | Right Rear Wheel Speed Sensor Supply: Line Short to UBat |
| 0x00403B11 | Right Rear Wheel Speed Sensor Supply: Line Short to Gnd |
| 0x00403A62 | Right Rear Wheel Speed Sensor: Plausibility against second signal failed |
| 0x00403A4A | Right Rear Wheel Speed Sensor: Wrong Component detected |
| 0x00403A22 | Right Rear Wheel Speed Sensor: Signal out of Range |
| 0x00403A14 | Right Rear Wheel Speed Sensor: Line Short to Ground or Interruption |
| 0x00403A12 | Right Rear Wheel Speed Sensor: Line Short to UBat |
| 0x00403A11 | Right Rear Wheel Speed Sensor: Line Short to Gnd |
| 0x00403812 | Left Rear Wheel Speed Sensor Supply: Line Short to UBat |
| 0x00403811 | Left Rear Wheel Speed Sensor Supply: Line Short to Gnd |
| 0x00403776 | Left Rear Wheel Speed Sensor: Wrong mounting position |
| 0x00403762 | Left Rear Wheel Speed Sensor: Plausibility against second signal failed |
| 0x00403762 | Left Rear Wheel Speed Sensor: Plausibility against second signal failed |
| 0x00403762 | Left Rear Wheel Speed Sensor: Plausibility against second signal failed |
| 0x0040374A | Left Rear Wheel Speed Sensor: Wrong Component detected |
| 0x00403722 | Left Rear Wheel Speed Sensor: Signal out of Range |
| 0x00403714 | Left Rear Wheel Speed Sensor: Line Short to Ground or Interruption |
| 0x00403712 | Left Rear Wheel Speed Sensor: Line Short to UBat |
| 0x00403711 | Left Rear Wheel Speed Sensor: Line Short to Gnd |
| 0x00403511 | Right Front Wheel Speed Sensor Supply: Line Short to Gnd |
| 0x00403462 | Right Front Wheel Speed Sensor: Plausibility against second signal failed |
| 0x0040344A | Right Front Wheel Speed Sensor: Wrong Component detected |
| 0x00403422 | Right Front Wheel Speed Sensor: Signal out of Range |
| 0x00403414 | Right Front Wheel Speed Sensor: Line Short to Ground or Interruption |
| 0x00403412 | Right Front Wheel Speed Sensor: Line Short to UBat |
| 0x00403411 | Right Front Wheel Speed Sensor: Line Short to Gnd |
| 0x00403212 | Left Front Wheel Speed Sensor Supply: Line Short to UBat |
| 0x00403211 | Left Front Wheel Speed Sensor Supply: Line Short to Gnd |
| 0x00403176 | Left Front Wheel Speed Sensor: Wrong mounting position |
| 0x00403162 | Left Front Wheel Speed Sensor: Plausibility against second signal failed |
| 0x0040314A | Left Front Wheel Speed Sensor: Wrong Component detected |
| 0x00403122 | Left Front Wheel Speed Sensor: Signal out of Range |
| 0x00403114 | Left Front Wheel Speed Sensor: Line Short to Ground or Interruption |
| 0x00403112 | Left Front Wheel Speed Sensor: Line Short to UBat |
| 0x00403111 | Left Front Wheel Speed Sensor: Line Short to Gnd |
| 0x00402009 | ABS Pump Motor Control: Generic Component fault |



© This document is the exclusive property of Robert Bosch GmbH. Without their consent it may not be reproduced or given to third parties.
If printed this is a uncontrolled document. The user must verify it is an authorized edition prior to use.