Customer Product Specification
Diagnose
KWP 2000
GENERAL MK70
Revision: 2.2

Vertrauliches Eigentum. Dieser Informationsträger und die darin enthaltenen Informationen sind ausschließliches Eigentum der Continental Teves AG & Co. OHG (Teves) und der Conti Temic microelectronic GmbH (Temic) sowie deren Schwester- und Tochtergesellschaften. Sie dürfen ohne vorherige schriftliche Genehmigung durch Teves und Temic nicht kopiert, verteilt oder auf andere Weise offenbart oder verwertet werden. Alle Rechte vorbehalten.

Confidential and proprietary. This document and its contents are the exclusive property of Continental Teves AG & Co. OHG (Teves) and Conti Temic microelectronic GmbH (Temic) and their associated companies. They are not to be copied, distributed, or otherwise disclosed or used without the prior written consent of Teves and Temic.
All rights reserved.

1 REVISION NOTICES 3

DEFINTITIONS 3

2 GENERAL DIAGNOSE- REQUIREMENTS 4

2.1 CONDITIONS FOR DIAGNOSTICS- ENTRY 4
2.2 GENERAL DATACOMMUNICATION 4
2.3 SERIAL DATA COMMUNICATION 4
2.4 BYTE-FORMAT AND TIMING OF COMMUNICATION'S BUILD UP 5
2.5 SERIAL DATA LINK COMMUNICATION'S BUILD UP 6
2.6 CHECKSUM 6
2.7 NEGATIVE RESPONSE 7
2.8 BEHAVIOR OF ABS- AND BREAK – WARNING LAMP 8
2.9 START DIAGNOSE (STARTDIAGNOSTICSESSION) 8
2.10 CHANGE IN THE TIMING PARAMETER 9
2.11 TESTER PRESENT 10
2.12 READ THE CONTROLLER-IDENTIFICATION (READECUIDENTIFICATION) 11
2.13 READ OUT EXTENDED CONTROL UNIT ID (READ ESG IDENT) 12
2.14 READ OUT THE STATUS OF THE FLASH 12
2.15 HARDWARE PART NUMBER 13
2.16 READING OUT ERROR MEMORY (READDTCBYSTATUS) 14
2.17 ERASE FAILURE MEMORY (CLEARDIAGNOSTICINFORMATION) 18
2.18 STOP DIAGNOSTIC - SESSION (STOPDIAGNOSTICSESSION) 19
2.19 STOP COMMUNICATION (STOPCOMMUNICATION) 19

3 READ OUT MEASURED VALUES (READDATABYLOCALIDENTIFIER) 20

3.1 WHEEL SPEED (LOCALID 01/80) 20
3.2 BLS STATUS (LOCALID 03/82) 21

4 VALVE- AND PUMP- OPERATION 22

5 PARAMETERIZATION/CODING 24

6 ACTUATOR TEST 25

6.1 CALL THE SUPPORTED FUNCTION (STARTROUTINEBYLOCALIDENTIFIER) 25
6.2 STOP (STOPROUTINEBYLOCALIDENTIFIER) 26
6.3 START ACTUATOR TEST 28
6.4 FUNCTION PROGRESS INQUIRY 30
6.5 RELAY FUNCTION SEQUENCE 32
6.6 QUERY FUNCTION SEQUENCE 33
6.7 RELAY FUNCTION SEQUENCE 35

7 BASIC SETTING 36

7.1 START BASIC SETTING 36
7.2 QUERY 1 FUNCTION SEQUENCE 38
7.3 RELAY FUNCTION SEQUENCE 40
7.4 QUERY 2 FUNCTION SEQUENCE 41
7.5 FILLING THE HYDRAULIC UNIT 41

Vertrauliches Eigentum. Dieser Informationsträger und die darin enthaltenen Informationen sind ausschließliches Eigentum der Continental Teves AG & Co. OHG (Teves) und der Conti Temic microelectronic GmbH (Temic) sowie deren Schwester- und Tochtergesellschaften. Sie dürfen ohne vorherige schriftliche Genehmigung durch Teves und Temic nicht kopiert, verteilt oder auf andere Weise offenbart oder verwertet werden. Alle Rechte vorbehalten.

Confidential and proprietary. This document and its contents are the exclusive property of Continental Teves AG & Co. OHG (Teves) and Conti Temic microelectronic GmbH (Temic) and their associated companies. They are not to be copied, distributed, or otherwise disclosed or used without the prior written consent of Teves and Temic. All rights reserved.

8 CODING 2 44

8.1 START SEQUENCE 44

1 Revision Notices

Basis: “KeyWord Protocol 2000” customer product specification ATE N 555 69.03

Serial number	Date	Modification
1	21.11.07	Document created for GENERAL MK70 ABS
2	06.03.08	Copy to new Conti Template
3	14.03.08	ATE number added

Defintitions

ECU - Electronic Controller Unit
BLS - Break Light Switch
IFL - Inlet Valve Front Left
OFL - Outlet Valve Front Left
IFR - Inlet Valve Front Right
OFR - Outlet Valve Front Right
IRL - Inlet Valve Rear Left
ORL - Outlet Valve Rear Left
IRR - Inlet Valve Rear Right
ORR - Outlet Valve Rear Right
SV1 - Special Valve #1
SV2 - Special Valve #2
EUV1 - Electronic reversing valve #1
EUV2 -Electronic reversing valve #2
DDS - Deflation Detection System
ESP - Electronic Stability Program
OHBV - Optimized Hydraulic Brake, vaccum-boosted, including ESP
HSA - Hill Start Assist
TSP - Trailer Stability Program
SG - Control unit

Under voltage: (see 3.1) Battery voltage < 10V
ECU-Reset voltage: Battery voltage < 8.5V

Vertrauliches Eigentum. Dieser Informationsträger und die darin enthaltenen Informationen sind ausschließliches Eigentum der Continental Teves AG & Co. OHG (Teves) und der Conti Temic microelectronic GmbH (Temic) sowie deren Schwester- und Tochtergesellschaften. Sie dürfen ohne vorherige schriftliche Genehmigung durch Teves und Temic nicht kopiert, verteilt oder auf andere Weise offenbart oder verwertet werden. Alle Rechte vorbehalten.

Confidential and proprietary. This document and its contents are the exclusive property of Continental Teves AG & Co. OHG (Teves) and Conti Temic microelectronic GmbH (Temic) and their associated companies. They are not to be copied, distributed, or otherwise disclosed or used without the prior written consent of Teves and Temic. All rights reserved.

2 General Diagnose- Requirements

The diagnostics requirements specifications " KeyWord-Protocol 2000, K-line, Version 2" dated 15.04.00 is applicable. This document shall be regarded as descriptive summary.

Conditions for Diagnostics- Entry

The following requirements must be met for communication to be established between the ECU and the tester:

a) Wheel speeds **less** than **10** km/h.
b) No ABS/EDS/EBD/ESC control
c) The controller must be switched on for at least about **100 msec.**
d) The battery voltage must be **more** than about **6.7 V.**
e) Tester connected to ECU through K-Line.
f) The serial data connection can be established once the requirements a) to e) have been met.

The serial data connection can be established once the requirements a) to e) have been met.

General Datacommunication

The data communication is maintained under the following conditions:

a) Wheel speeds **more than** 10 km/h
b) Occurring and existing undervoltage within the range of around 6.7 V and 9 V.

Serial Data Communication

The Tester send the **Addressword 0x03 at 5 Baud**, then ECU send the Synchro- and Keyword byte at **10400 Baud** just like the complete communication afterwards.
The protocol for the communication setup is as follows:

Byte-No.	Description	Value (hex)	Send direction
1	Address byte	0x03	Tester -> ECU
2	Synchro byte	0x55	ECU -> Tester
3	Key byte 1	0x6B	ECU -> Tester
4	Key byte 2	0x0F	ECU -> Tester
5	Key byte 2 compl.	0x70	Tester -> ECU
6	Address byte compl.	0x7C	ECU -> Tester

Vertrauliches Eigentum. Dieser Informationsträger und die darin enthaltenen Informationen sind ausschließliches Eigentum der Continental Teves AG & Co. OHG (Teves) und der Conti Temic microelectronic GmbH (Temic) sowie deren Schwester- und Tochtergesellschaften. Sie dürfen ohne vorherige schriftliche Genehmigung durch Teves und Temic nicht kopiert, verteilt oder auf andere Weise offenbart oder verwertet werden. Alle Rechte vorbehalten.

Confidential and proprietary. This document and its contents are the exclusive property of Continental Teves AG & Co. OHG (Teves) and Conti Temic microelectronic GmbH (Temic) and their associated companies. They are not to be copied, distributed, or otherwise disclosed or used without the prior written consent of Teves and Temic.
All rights reserved.

Byte-Format and Timing of Communication's build up

Protocol byte	**Byte format**
Address byte, Key byte 1, Key byte 2, Key byte 2 Compl. Address byte compl.	1 Start-/Stop bit 7 Data bit 1 Parity bit (odd)
Synchro byte	1 Start-/Stop bit 8 Data bit No Parity bit

Description of the defined Time Value:

Timeout:	231ms
Waite time before Synchro byte:	80 - 210ms
Waite time before Key byte 1:	5 - 20ms
Waite time before Key byte 2:	1 - 20ms
Response time of Key byte 2 Compl.:	25 - 50ms
Response time of Address byte Compl.:	25 - 50ms

Vertrauliches Eigentum. Dieser Informationsträger und die darin enthaltenen Informationen sind ausschließliches Eigentum der Continental Teves AG & Co. OHG (Teves) und der Conti Temic microelectronic GmbH (Temic) sowie deren Schwester- und Tochtergesellschaften. Sie dürfen ohne vorherige schriftliche Genehmigung durch Teves und Temic nicht kopiert, verteilt oder auf andere Weise offenbart oder verwertet werden. Alle Rechte vorbehalten.

Confidential and proprietary. This document and its contents are the exclusive property of Continental Teves AG & Co. OHG (Teves) and Conti Temic microelectronic GmbH (Temic) and their associated companies. They are not to be copied, distributed, or otherwise disclosed or used without the prior written consent of Teves and Temic. All rights reserved.

Serial Data Link Communication's build up

The Protocol of Communications build up is as following:

Byte-No.	Description	Value (hex)	Send direction
0	Format byte	0x?? + 0x80	Tester -> ECU
1	Address ECU	0x28	
2	Address Tester	0xF1	
3	Block title	0x??	
n	Checksum	0x??	

Definition of Response block:

Byte-No.	Description	Value (hex)	Send direction
0	Format byte	0x?? + 0x80	ECU -> Tester
1	Address Tester	0xF1	
2	Address ECU	0x28	
3	Block title	0x?? + 0x40	
n	Checksum	0x??	

Checksum

Checksum be build according to VDA instruction.

Vertrauliches Eigentum. Dieser Informationsträger und die darin enthaltenen Informationen sind ausschließliches Eigentum der Continental Teves AG & Co. OHG (Teves) und der Conti Temic microelectronic GmbH (Temic) sowie deren Schwester- und Tochtergesellschaften. Sie dürfen ohne vorherige schriftliche Genehmigung durch Teves und Temic nicht kopiert, verteilt oder auf andere Weise offenbart oder verwertet werden. Alle Rechte vorbehalten.

Confidential and proprietary. This document and its contents are the exclusive property of Continental Teves AG & Co. OHG (Teves) and Conti Temic microelectronic GmbH (Temic) and their associated companies. They are not to be copied, distributed, or otherwise disclosed or used without the prior written consent of Teves and Temic. All rights reserved.

Negative Response

Following possible negative Answer are:

0x11 Service Not Supported
0x12 Subfunction not supported/Invalid Format
0x13 Incorrect Message Length
0x21 Busy Repeat Request
0x22 Conditions Not Correct
0x31 Request Out Of Range
0x33 Security Access Denied
0x35 Invalid Key
0x37 Dia_required_time_delay_not_expired
0x78 Request Correctly Received-Response Pending
0x7F Dia wrong session
0x91 Scaling Not Supported

Definition of answer block:

Byte-No.	Designation	Value (hex)	Send direction
0	Segmentation/Length	0x?0	ECU -> Tester
1	Length byte	0x03	
2	Negative answer	0x7F	
3	Service ID	Block title	
4	Negative answer	0xxx	

In case of the following commands, the negative response 0x78 is always sent first:

Chapter 2.12: Read the Device Identification
Chapter 2.17: Erase Failure memory

Vertrauliches Eigentum. Dieser Informationsträger und die darin enthaltenen Informationen sind ausschließliches Eigentum der Continental Teves AG & Co. OHG (Teves) und der Conti Temic microelectronic GmbH (Temic) sowie deren Schwester- und Tochtergesellschaften. Sie dürfen ohne vorherige schriftliche Genehmigung durch Teves und Temic nicht kopiert, verteilt oder auf andere Weise offenbart oder verwertet werden. Alle Rechte vorbehalten.

Confidential and proprietary. This document and its contents are the exclusive property of Continental Teves AG & Co. OHG (Teves) and Conti Temic microelectronic GmbH (Temic) and their associated companies. They are not to be copied, distributed, or otherwise disclosed or used without the prior written consent of Teves and Temic. All rights reserved.

Behavior of ABS- and Break – Warning lamp

1. After entering the Diagnostic Mode, the ABS- and the Brake Warning lamp **flash** with **1,1 Hz.** If there is any failure code stored, the ABS Warning lamp will be always lighted.

2. The ABS- and Brake Warning lamp is **flashing** with **1,1 Hz**, if the ECU hast not been coded.

3. When the following commands are executed, the ABS Warning lamp changes the blink frequency from **1,1 Hz** to **1,9 Hz** (the Brake Warning lamp continues flashing with 1,1 Hz):

   Chapter 6: Static Test
   Chapter 7: Basic Setting

Start Diagnose (startDiagnosticSession)

Definition of request block:

Byte-No.	Description	Value (hex)	Send direction
1	Block title	0x10	Tester -> ECU
2	Mode	0xZZ	

Definition of response block:

Byte-No.	Description	Value (hex)	Send direction
1	Block title	0x50	ECU -> Tester
2	Mode	0xZZ	
3	F-Boot	0xZ2	

Mode ZZ
- 0x83: End of Line Session with end of line access authorization “coding 2”
- 0x85: Start DiagnosticSessionFlash
- 0x86: Developer-Session with access authorization and Conti Teves commands.
- 0x89: Standard self-diagnose

The response F-Boot is available only by Flash Mode 0x85:
F-Boot 0xZ2: 0x00 - SG is already in BLF
> 0x00 - SG needs channel to be removed for the descent in the BFL

Vertrauliches Eigentum. Dieser Informationsträger und die darin enthaltenen Informationen sind ausschließliches Eigentum der Continental Teves AG & Co. OHG (Teves) und der Conti Temic microelectronic GmbH (Temic) sowie deren Schwester- und Tochtergesellschaften. Sie dürfen ohne vorherige schriftliche Genehmigung durch Teves und Temic nicht kopiert, verteilt oder auf andere Weise offenbart oder verwertet werden. Alle Rechte vorbehalten.

Confidential and proprietary. This document and its contents are the exclusive property of Continental Teves AG & Co. OHG (Teves) and Conti Temic microelectronic GmbH (Temic) and their associated companies. They are not to be copied, distributed, or otherwise disclosed or used without the prior written consent of Teves and Temic. All rights reserved.

Change in the Timing Parameter

This command is only available for K-line diagnostics

Not for customer service.

The following commands must be executed in the specified order before using this service:
- **Coding 2 (Code: End of Line)**
- **Start Diagnostic Session (End of Line Session) (refer to 2.9)**

Definition of the request block:

Byte no.	Name	Value (hex)	Transmit direction
1	AccessCommunicationPara. R.	0x83	Tester -> ECU
2	Timing Parameter ID	0x03	
3	P2min	0x01	
4	P2max	0x01	
5	P3min	0x01	
6	P3max	0x01	
7	P4min	0x01	

Definition of the response block:

The control unit tests whether it is possible to change over to the specified timing parameters and then sends a response under the preset conditions before changing over to the new timing parameters. This can be done only in case of a positive response.

Positive response:

Byte no.	Name	Value (hex)	Transmit direction
1	AccessCommunicationPara. R.	0xC3	ECU -> Tester
2	Timing Parameter ID	0x03	

Negative response:

Byte no.	Name	Value (hex)	Transmit direction
1	negative response	0x7F	ECU -> Tester
2	AccessCommunicationPara. R.	0x83	
3	Response Code	0x31	

Vertrauliches Eigentum. Dieser Informationsträger und die darin enthaltenen Informationen sind ausschließliches Eigentum der Continental Teves AG & Co. OHG (Teves) und der Conti Temic microelectronic GmbH (Temic) sowie deren Schwester- und Tochtergesellschaften. Sie dürfen ohne vorherige schriftliche Genehmigung durch Teves und Temic nicht kopiert, verteilt oder auf andere Weise offenbart oder verwertet werden. Alle Rechte vorbehalten.

Confidential and proprietary. This document and its contents are the exclusive property of Continental Teves AG & Co. OHG (Teves) and Conti Temic microelectronic GmbH (Temic) and their associated companies. They are not to be copied, distributed, or otherwise disclosed or used without the prior written consent of Teves and Temic. All rights reserved.

In case of the StopDiagnosticSession and StartDiagnosticSession commands, one returns to the normal timing.

Tester Present

Definition of Request Block:

Byte-No.	Description	Value (hex)	Send direction
1	Block title	0x3E	Tester -> ECU

Definition of Response block:

Byte-No.	Description	Value (hex)	Send direction
1	Block title	0x7E	ECU -> Tester

Vertrauliches Eigentum. Dieser Informationsträger und die darin enthaltenen Informationen sind ausschließliches Eigentum der Continental Teves AG & Co. OHG (Teves) und der Conti Temic microelectronic GmbH (Temic) sowie deren Schwester- und Tochtergesellschaften. Sie dürfen ohne vorherige schriftliche Genehmigung durch Teves und Temic nicht kopiert, verteilt oder auf andere Weise offenbart oder verwertet werden. Alle Rechte vorbehalten.

Confidential and proprietary. This document and its contents are the exclusive property of Continental Teves AG & Co. OHG (Teves) and Conti Temic microelectronic GmbH (Temic) and their associated companies. They are not to be copied, distributed, or otherwise disclosed or used without the prior written consent of Teves and Temic. All rights reserved.

Read the Device Identification (readECUIdentification)

Definition of the request block

Byte-No.	Designation	Value (hex)	Send direction
1	Block title	0x1A	Tester -> ECU
2	ECU ID	0x9B	

Definition of the answer block

Byte-No.	Designation	Value (hex)	Send direction
1	Block title	0x5A	ECU -> Tester
2	ECU ID	0x9B	
3 – 48	Data bytes	0x??	

Datenbyte /Value		Inhalt	Format	
1 - 12		Customer Part number	ASCII	EEPROM
13	B0	Program stand and Programmability Bit 7 = 1 (no programmable)	ASCII	
14	31		ASCII	
15	00	Data status		
16	31			EEPROM
17	03	high nibble: Number of coding table low nibble: Number of coding bytes	Hex	ROM ROM
18		Byte 1 Coding Value		EEPROM
19		Byte 2 Coding Value		EEPROM
20		Byte 3 Coding Value		EEPROM
21 22 23 24 25 26		Bit 7-0: Device number (Workshop code) Bit 7-0: Device number Bit 7-3: Device number Bit 2-0: Importer number Bit 7-1: Importer number Bit 0: Company number Bit 7-0: Company number Bit 7-0: Company number	Hex	EEPROM
27 - 46		System name	ASCII	EEPROM

The response is transmitted in two blocks. The length of response block 1 is restricted to 40 bytes.

Vertrauliches Eigentum. Dieser Informationsträger und die darin enthaltenen Informationen sind ausschließliches Eigentum der Continental Teves AG & Co. OHG (Teves) und der Conti Temic microelectronic GmbH (Temic) sowie deren Schwester- und Tochtergesellschaften. Sie dürfen ohne vorherige schriftliche Genehmigung durch Teves und Temic nicht kopiert, verteilt oder auf andere Weise offenbart oder verwertet werden. Alle Rechte vorbehalten.

Confidential and proprietary. This document and its contents are the exclusive property of Continental Teves AG & Co. OHG (Teves) and Conti Temic microelectronic GmbH (Temic) and their associated companies. They are not to be copied, distributed, or otherwise disclosed or used without the prior written consent of Teves and Temic. All rights reserved.

Read out extended control unit ID (read ESG IDENT)

Definition of the request block:

Byte no.	Name	Value (hex)	Transmit direction
1	Block title	0x1A	Tester -> ECU
2	ESG ID	0x86	

Definition of the response block:

Byte no.	Name	Value (hex)	Transmit direction
1	Block title	0x5A	ECU -> Tester
2	ESG ID	0x86	
3	Scaling offset 1	0x01	
4	Scaling Offset 2	0x20	
3 – 33	data bytes	0x??	

Data byte	Contents	Format
1 - 7	Manufacturer's works code and ID 7 digits	hhh-kkk EEPROM
8 - 15	Production date 8 digits	dd.mm.yy EEPROM
16 - 23	Manufacturer revision status 8 digits	12345678 EEPROM
24 - 27	Manufacturer test stand no. 4 digits	pppp EEPROM
28 - 31	Serial manufacturer no. 4 digits	nnnn EEPROM

Scaling Offset 3 0xFF

The data is written into EEPROM by the production department.

Read out the status of the flash

Definition of the request block:

Vertrauliches Eigentum. Dieser Informationsträger und die darin enthaltenen Informationen sind ausschließliches Eigentum der Continental Teves AG & Co. OHG (Teves) und der Conti Temic microelectronic GmbH (Temic) sowie deren Schwester- und Tochtergesellschaften. Sie dürfen ohne vorherige schriftliche Genehmigung durch Teves und Temic nicht kopiert, verteilt oder auf andere Weise offenbart oder verwertet werden. Alle Rechte vorbehalten.

Confidential and proprietary. This document and its contents are the exclusive property of Continental Teves AG & Co. OHG (Teves) and Conti Temic microelectronic GmbH (Temic) and their associated companies. They are not to be copied, distributed, or otherwise disclosed or used without the prior written consent of Teves and Temic. All rights reserved.

Byte no.	Name	Value (hex)	Transmit direction
1	Block title	0x1A	Tester -> ECU
2	IdentificationOption	0x9C	

Definition of the response block:

Byte no.	Name	Value (hex)	Transmit direction
1	Block title	0x5A	ECU -> Tester
2	IdentificationOption	0x9C	
3 – 21	data bytes	0x??	

Data byte	Contents	Format
1	Flash status	Hex EEPROM
2	Programming attempts counter	Hex EEPROM
3	Successful programming counter	Hex EEPROM
4	Status of the programming preconditions	Hex EEPROM
5 - 10	FTC	Hex
11 - 18	Flash_date	ASCII EEPROM

Hardware part number

Definition of the request block:

Byte no.	Name	Value (hex)	Transmit direction

Vertrauliches Eigentum. Dieser Informationsträger und die darin enthaltenen Informationen sind ausschließliches Eigentum der Continental Teves AG & Co. OHG (Teves) und der Conti Temic microelectronic GmbH (Temic) sowie deren Schwester- und Tochtergesellschaften. Sie dürfen ohne vorherige schriftliche Genehmigung durch Teves und Temic nicht kopiert, verteilt oder auf andere Weise offenbart oder verwertet werden. Alle Rechte vorbehalten.

Confidential and proprietary. This document and its contents are the exclusive property of Continental Teves AG & Co. OHG (Teves) and Conti Temic microelectronic GmbH (Temic) and their associated companies. They are not to be copied, distributed, or otherwise disclosed or used without the prior written consent of Teves and Temic. All rights reserved.

1	Block title	0x1A	Tester -> ECU
2	IdentificationOption	0x91	

Definition of the response block:

Byte no.	**Name**	**Value (hex)**	**Transmit direction**
1	Block title	0x5A	ECU -> Tester
2	IdentificationOption	0x91	
3	ScalingOffset	0x0E	
4	Hardware part number byte 1	0x??	
5	Hardware part number byte 2	0x??	
6	Hardware part number byte 3	0x??	
7	Hardware part number byte 4	0x??	
8	Hardware part number byte 5	0x??	
9	Hardware part number byte 6	0x??	
10	Hardware part number byte 7	0x??	
11	Hardware part number byte 8	0x??	
12	Hardware part number byte 9	0x??	
13	Hardware part number byte 10	0x??	
14	Hardware part number byte 11	0x??	
15	Hardware part number byte 12	0x??	
16	Test device code	0x??	
17	ScalingOffset	0xFF	

Reading out failure memory (readDTCByStatus)

Definition of the request block :

Byte-No.	**Description**	**Value (hex)**	**Send direction**
1	Block title	0x18	Tester -> ECU
2	Status OfDTC	0x02	
3	Group OfDTC(High Byte)	0xFF	
4	Group OfDTC(Low Byte)	0x00	

Definition of the response block:

Byte-No.	**Description**	**Value (hex)**	**Send direction**
1	Block title	0x58	ECU -> Tester
2	NumberOfDTC	0xZZ	

Vertrauliches Eigentum. Dieser Informationsträger und die darin enthaltenen Informationen sind ausschließliches Eigentum der Continental Teves AG & Co. OHG (Teves) und der Conti Temic microelectronic GmbH (Temic) sowie deren Schwester- und Tochtergesellschaften. Sie dürfen ohne vorherige schriftliche Genehmigung durch Teves und Temic nicht kopiert, verteilt oder auf andere Weise offenbart oder verwertet werden. Alle Rechte vorbehalten.

Confidential and proprietary. This document and its contents are the exclusive property of Continental Teves AG & Co. OHG (Teves) and Conti Temic microelectronic GmbH (Temic) and their associated companies. They are not to be copied, distributed, or otherwise disclosed or used without the prior written consent of Teves and Temic. All rights reserved.

3	Failurecode 1/High Byte	0xZZ
4	Failurecode 1/Low Byte	0xZZ
5	Failuretype 1	0xZZ
6	Failurecode 2/High Byte	0xZZ
7	Failurecode 2/Low Byte	0xZZ
8	Failuretype 2	0xZZ
9	Failurecode 3/High Byte	0xZZ
10	Failurecode 3/Low Byte	0xZZ
11	Failuretype 3	0xZZ
:		
3n+2	Failurecode n/High Byte	0xZZ
3n+3	Failurecode n/Low Byte	0xZZ
3n+4	Failuretype n	0xZZ

The errors are output together in a response block.
A maximum of 10 errors can be output.

The errors in the control unit defined by error codes are as follows:

Error definition (static error)	**Error code**	**Error type**
Control unit	0x0003	0x3
Control unit, error in RAM	0x3FD8	0xE
Control unit, Error in external RAM	0x3FD9	0xE
Control unit, Error in EEPROM	0x3FDB	0xE
Control unit, Checksum error	0x3FDC	0xE
Control unit, Error detected by self-test	0x3FDE	0xE
Control unit, Programming error	0x3FDF	0xE
Control unit, electrical error	0x3FE0	0xE
Control unit, malfunction	0x3FE1	0xE
Control unit, watchdog timer	0x3FE3	0xE
Control unit, internal sensor error	0x3FF4	0xE
Control unit not coded	0x0412	0x0
Control unit coded incorrectly (Bytecoding)	0x0414	0x0, 0x3, 0x8
Kl. 30 on-board voltage	0x029C	0x1, 0x2, 0x8

Vertrauliches Eigentum. Dieser Informationsträger und die darin enthaltenen Informationen sind ausschließliches Eigentum der Continental Teves AG & Co. OHG (Teves) und der Conti Temic microelectronic GmbH (Temic) sowie deren Schwester- und Tochtergesellschaften. Sie dürfen ohne vorherige schriftliche Genehmigung durch Teves und Temic nicht kopiert, verteilt oder auf andere Weise offenbart oder verwertet werden. Alle Rechte vorbehalten.

Confidential and proprietary. This document and its contents are the exclusive property of Continental Teves AG & Co. OHG (Teves) and Conti Temic microelectronic GmbH (Temic) and their associated companies. They are not to be copied, distributed, or otherwise disclosed or used without the prior written consent of Teves and Temic. All rights reserved.

ABS operation	0x046A	0x0, 0x8
Data-Bus drive	0x0520	0xE
Engine Control unit	0x0522	0x4, 0xD
Engine Control unit coded incorrectly	0x4664	0x0
Transmission control unit	0x0523	0x4, 0xD
Control unit for all-wheel drive	0x052C	0x4, 0xD
Front-left speed sensor	0x011B	0x3, 0x8, 0xC
Front-right speed sensor	0x011D	0x3, 0x8, 0xC
Rear-left speed sensor	0x0122	0x3, 0x8, 0xC
Rear-right speed sensor	0x011F	0x3, 0x8, 0xC
Hydraulic pump	0x04FC	0x8, 0xC, 0xE
Control unit for instrument cluster	0x0525	0x0, 0x4
Control unit for Steering aid	0x051D	0x4, 0x8
Incorrect control unit installed	0x0825	0x0
Diagnostic-interface for data bus J553	0x0513	0x4
Central control unit for comfort system -J393	0x0532	0x4, 0x8
Control unit for immobilizer	0x01DA	0x4
EOL test active	0x05CE	0x0
EOL test cancellation, timeout	0x05CF	0x0

Failure forget counter:
The failure forget counter value is 40 for non-CAN errors
and 15 for CAN errors.
The failure forget counter value is 0x052C - 0xD, 0x0522 - 0xD for CAN errors and 0x0491-0x8 for door contact switch errors: 10.

Error type:

0x0 no display
0x1 upper limit value exceeded
0x2 lower limit value fallen short of
0x3 mechanicical error
0x4 no signal/communication
0x5 no or incorrect basic setting/adaption
0x8 implausible signal
0xC electrical error in the electric circuit
0xD read out failure memory
0xE defective

Vertrauliches Eigentum. Dieser Informationsträger und die darin enthaltenen Informationen sind ausschließliches Eigentum der Continental Teves AG & Co. OHG (Teves) und der Conti Temic microelectronic GmbH (Temic) sowie deren Schwester- und Tochtergesellschaften. Sie dürfen ohne vorherige schriftliche Genehmigung durch Teves und Temic nicht kopiert, verteilt oder auf andere Weise offenbart oder verwertet werden. Alle Rechte vorbehalten.

Confidential and proprietary. This document and its contents are the exclusive property of Continental Teves AG & Co. OHG (Teves) and Conti Temic microelectronic GmbH (Temic) and their associated companies. They are not to be copied, distributed, or otherwise disclosed or used without the prior written consent of Teves and Temic.
All rights reserved.

Connection of the error type with: 0x60 for static errors
0x20 for for sporadic errors

Errors are saved only outside the diagnostics.

Vertrauliches Eigentum. Dieser Informationsträger und die darin enthaltenen Informationen sind ausschließliches Eigentum der Continental Teves AG & Co. OHG (Teves) und der Conti Temic microelectronic GmbH (Temic) sowie deren Schwester- und Tochtergesellschaften. Sie dürfen ohne vorherige schriftliche Genehmigung durch Teves und Temic nicht kopiert, verteilt oder auf andere Weise offenbart oder verwertet werden. Alle Rechte vorbehalten.

Confidential and proprietary. This document and its contents are the exclusive property of Continental Teves AG & Co. OHG (Teves) and Conti Temic microelectronic GmbH (Temic) and their associated companies. They are not to be copied, distributed, or otherwise disclosed or used without the prior written consent of Teves and Temic.
All rights reserved.

Erase Failure memory (clearDiagnosticInformation)

Definition of the request block:

Byte No.	Description	Value (hex)	Send direction
1	Block title	0x14	Tester -> ECU
2		0xFF	
3		0x00	

Definition of the response block:

Byte No.	Description	Value (hex)	Send direction
1	Block title	0x54	ECU -> Tester
2		0xFF	
3		0x00	

Vertrauliches Eigentum. Dieser Informationsträger und die darin enthaltenen Informationen sind ausschließliches Eigentum der Continental Teves AG & Co. OHG (Teves) und der Conti Temic microelectronic GmbH (Temic) sowie deren Schwester- und Tochtergesellschaften. Sie dürfen ohne vorherige schriftliche Genehmigung durch Teves und Temic nicht kopiert, verteilt oder auf andere Weise offenbart oder verwertet werden. Alle Rechte vorbehalten.

Confidential and proprietary. This document and its contents are the exclusive property of Continental Teves AG & Co. OHG (Teves) and Conti Temic microelectronic GmbH (Temic) and their associated companies. They are not to be copied, distributed, or otherwise disclosed or used without the prior written consent of Teves and Temic. All rights reserved.

Stop Diagnostic - Session (stopDiagnosticSession)

One returns to normal timing with the StopDiagnosticSession command.

Definition of the request block:

Byte-No.	Description	Value (hex)	Send direction
1	Block title	0x20	Tester -> ECU

Definition of the response block:

Byte-No.	Description	Value (hex)	Send direction
1	Block title	0x60	ECU -> Tester

Stop Communication (stopCommunication)

Definition of the request block:

Byte-No.	Description	Value (hex)	Send direction
1	Block title	0x82	Tester -> ECU

Definition of the response block:

Byte-No.	Description	Value (hex)	Send direction
1	Block title	0xC2	ECU -> Tester

Vertrauliches Eigentum. Dieser Informationsträger und die darin enthaltenen Informationen sind ausschließliches Eigentum der Continental Teves AG & Co. OHG (Teves) und der Conti Temic microelectronic GmbH (Temic) sowie deren Schwester- und Tochtergesellschaften. Sie dürfen ohne vorherige schriftliche Genehmigung durch Teves und Temic nicht kopiert, verteilt oder auf andere Weise offenbart oder verwertet werden. Alle Rechte vorbehalten.

Confidential and proprietary. This document and its contents are the exclusive property of Continental Teves AG & Co. OHG (Teves) and Conti Temic microelectronic GmbH (Temic) and their associated companies. They are not to be copied, distributed, or otherwise disclosed or used without the prior written consent of Teves and Temic. All rights reserved.

3 Read out measured values (readDataByLocalIdentifier)

Wheel Speed (LocalID 01/80)

Definition of the request Block :

Byte-No.	Description	Value (hex)	Send direction
1	Block title	0x21	Tester -> ECU
2	Local Identifier	0x01	

Definition of the response block:

Byte-No.	Description	Value (hex)	Send direction
1	Block title	0x61	ECU -> Tester
2	Local Identifier	0x01	
3	Standard display number 1	0x07	
4	Scaling Value 1	0x64	
5	Wheel speed FL	0xZZ	
6	Standard display number 2	0x07	
7	Scaling Value 2	0x64	
8	Wheel speed FR	0xZZ	
9	Standard display number 3	0x07	
10	Scaling Value 3	0x64	
11	Wheel speed RL	0xZZ	
12	Standard display number 4	0x07	
13	Scaling Value 4	0x64	
14	Wheel speed RR	0xZZ	

Vertrauliches Eigentum. Dieser Informationsträger und die darin enthaltenen Informationen sind ausschließliches Eigentum der Continental Teves AG & Co. OHG (Teves) und der Conti Temic microelectronic GmbH (Temic) sowie deren Schwester- und Tochtergesellschaften. Sie dürfen ohne vorherige schriftliche Genehmigung durch Teves und Temic nicht kopiert, verteilt oder auf andere Weise offenbart oder verwertet werden. Alle Rechte vorbehalten.

Confidential and proprietary. This document and its contents are the exclusive property of Continental Teves AG & Co. OHG (Teves) and Conti Temic microelectronic GmbH (Temic) and their associated companies. They are not to be copied, distributed, or otherwise disclosed or used without the prior written consent of Teves and Temic. All rights reserved.

BLS status (LocalID 03/82)

Definition of the request Block :

Byte-No.	Description	Value (hex)	Send direction
1	Block title	0x21	Tester -> ECU
2	Local Identifier	0x03	

Definition of the response block:

Byte-No.	Description	Value (hex)	Send direction
1	Block title	0x61	ECU -> Tester
2	Local Identifier	0x03	
3	Standard display number 1	0x25	
4	Scaling value 1/BLS status	0x00	
5	Measured value 1: not actuated/actuated	0xA7/0xC1	
6	Standard display number 2	0x25	
7	Scaling value 2/Brake-WL status	0x00	
8	Measured Value 2: on/off	0x87/0x88	
9	Standard display number 3	0x25	
10	Scaling value 3/ABS-WL-status	0x00	
11	Measured value 3: on/off	0x87/0x88	
12	Standard display number 4	0x25	
13	Scaling value 4/ESC/TCS-WL-status	0x00	
14	Measured value 4: on/off	0x87/0x88	

Note:

The standard display number 4 is available only with ESC vehicles.

Vertrauliches Eigentum. Dieser Informationsträger und die darin enthaltenen Informationen sind ausschließliches Eigentum der Continental Teves AG & Co. OHG (Teves) und der Conti Temic microelectronic GmbH (Temic) sowie deren Schwester- und Tochtergesellschaften. Sie dürfen ohne vorherige schriftliche Genehmigung durch Teves und Temic nicht kopiert, verteilt oder auf andere Weise offenbart oder verwertet werden. Alle Rechte vorbehalten.

Confidential and proprietary. This document and its contents are the exclusive property of Continental Teves AG & Co. OHG (Teves) and Conti Temic microelectronic GmbH (Temic) and their associated companies. They are not to be copied, distributed, or otherwise disclosed or used without the prior written consent of Teves and Temic. All rights reserved.

4 Valve- and Pump- Operation

Not for customer service.

The following commands must be executed in the specified order before using this service:

- **Coding2 (Code: End of Line)**
- **Start Diagnostic Session (End of Line Session)**

Definition of the request block

Byte-No.	Designation	Value (hex)	Send direction
1	Block title	0x30	Tester -> ECU
2	Local Identifier	0x80	
3	Control parameter	0x00	
4	Valve control byte	0xXX	
5	Pump control byte	0xYY	

Definition of the response block

Byte-No.	Designation	Value (hex)	Send direction
1	Block title	0x70	ECU -> Tester
2	Local Identifier	0x80	
3	Controll parameter	0x00	

Valve control byte 0xXX:

Bit 7 outlet Valve rear right	1 = deactive, 0 = active
Bit 6 inlet Valve rear right	1 = deactive, 0 = active
Bit 5 outlet Valve rear left	1 = deactive, 0 = active
Bit 4 inlet Valve rear left	1 = deactive, 0 = active
Bit 3 outlet Valve front right	1 = deactive, 0 = active
Bit 2 inlet Valve front right	1 = deactive, 0 = active
Bit 1 outlet Valve front left	1 = deactive, 0 = active
Bit 0 inlet Valve front left	1 = deactive, 0 = active

Vertrauliches Eigentum. Dieser Informationsträger und die darin enthaltenen Informationen sind ausschließliches Eigentum der Continental Teves AG & Co. OHG (Teves) und der Conti Temic microelectronic GmbH (Temic) sowie deren Schwester- und Tochtergesellschaften. Sie dürfen ohne vorherige schriftliche Genehmigung durch Teves und Temic nicht kopiert, verteilt oder auf andere Weise offenbart oder verwertet werden. Alle Rechte vorbehalten.

Confidential and proprietary. This document and its contents are the exclusive property of Continental Teves AG & Co. OHG (Teves) and Conti Temic microelectronic GmbH (Temic) and their associated companies. They are not to be copied, distributed, or otherwise disclosed or used without the prior written consent of Teves and Temic. All rights reserved.

Pump control byte 0xYY:

Bit 7	1 = deactive, 0 = active
Bit 6 Pump	1 = deactive, 0 = active
Bit 5 reserved	1 = deactive, 0 = active
Bit 4 Booster	1 = deactive, 0 = active
Bit 3 EUV 2	1 = deactive, 0 = active
Bit 2 EUV 1	1 = deactive, 0 = active
Bit 1 SV2	1 = deactive, 0 = active
Bit 0 SV1	1 = deactive, 0 = active

The valves are controlled for a maximum of 2 seconds if the commands are transmitted once. The command should be repeated for longer times, if necessary.

Ensure that a maximum time of **90 sec** is not exceeded, since there is a risk of destruction.

Details can be found in the ATE N 553 93.64 reference document.

Vertrauliches Eigentum. Dieser Informationsträger und die darin enthaltenen Informationen sind ausschließliches Eigentum der Continental Teves AG & Co. OHG (Teves) und der Conti Temic microelectronic GmbH (Temic) sowie deren Schwester- und Tochtergesellschaften. Sie dürfen ohne vorherige schriftliche Genehmigung durch Teves und Temic nicht kopiert, verteilt oder auf andere Weise offenbart oder verwertet werden. Alle Rechte vorbehalten.

Confidential and proprietary. This document and its contents are the exclusive property of Continental Teves AG & Co. OHG (Teves) and Conti Temic microelectronic GmbH (Temic) and their associated companies. They are not to be copied, distributed, or otherwise disclosed or used without the prior written consent of Teves and Temic. All rights reserved.

5 Parameterization/Coding

Definition of the request Block :

Byte-No.	Description	Value (hex)	Send direction
1	Block title	0x3B	Tester -> ECU
2	RecordLocalIdentifier	0x9A	
3	recordValue1 (workshopcode)	0xww	
4	recordValue2 (Workshopcode)	0xww	
5	recordValue3 (Workshopcode)	0xww	
6	recordValue4 (Workshopcode)	0xww	
7	recordValue5 (Workshopcode)	0xww	
8	recordValue6 (Workshopcode)	0xww	
9	recordValue7 (Prog/Datastatus)	0xpp	
10	recordValue8 (Prog/ Datastatus)	0xpp	
11	recordValue9 (Prog/ Datastatus)	0xdd	
12	recordValue10 (Prog/ Datastatus)	0xdd	
13	recordValue11 (CodingTable)	0x03	
14	recordValue12 (Codingbyte 1)	0xcc	
15	recordValue13 (Codingbyte 2)	0xcc	
16	recordValue14 (Codingbyte 3)	0xcc	

Definition of the response block:

Byte-No.	Description	Value (hex)	Send direction
1	Block title	0x7B	ECU -> Tester
2	RecordLocalIdentifier	0x9A	

Vertrauliches Eigentum. Dieser Informationsträger und die darin enthaltenen Informationen sind ausschließliches Eigentum der Continental Teves AG & Co. OHG (Teves) und der Conti Temic microelectronic GmbH (Temic) sowie deren Schwester- und Tochtergesellschaften. Sie dürfen ohne vorherige schriftliche Genehmigung durch Teves und Temic nicht kopiert, verteilt oder auf andere Weise offenbart oder verwertet werden. Alle Rechte vorbehalten.

Confidential and proprietary. This document and its contents are the exclusive property of Continental Teves AG & Co. OHG (Teves) and Conti Temic microelectronic GmbH (Temic) and their associated companies. They are not to be copied, distributed, or otherwise disclosed or used without the prior written consent of Teves and Temic. All rights reserved.

6 Actuator Test

The maximum control time of the valves is 90 seconds. The valves are then deactivated by the control unit.
The actuator test is not possible at undervoltage, at wheel speeds > 20 km/h and in the event of errors resulting in shutdown.

Call the supported Function (StartRoutineByLocalIdentifier)

Definition of the request Block :

Byte-No.	Description	Value (hex)	Send direction
1	Block title	0x31	Tester -> ECU
2	routineLocalIdentifier	0xB8	
3	Check of the supported function	0x00	
4	Check of the supported function	0x00	

Definition of the response block:

Byte-No.	Description	Value (hex)	Send direction
1	Block title	0x71	ECU -> Tester
2	routineLocalIdentifier	0xB8	
3	Reference number for basic setting	0x01	
4		0x01	
5	Reference number for actuator test	0x01	
6		0x02	
7	Reference number for adaption possible	0x01	
8		0x03	
9	Reference number for coding possible	0x01	
10		0x04	
11	Reference number for MWB readout	0x01	
12		0x06	
13	Reference number for Upload/Download	0x01	
14		0x08	

MWB - Measured value block

Vertrauliches Eigentum. Dieser Informationsträger und die darin enthaltenen Informationen sind ausschließliches Eigentum der Continental Teves AG & Co. OHG (Teves) und der Conti Temic microelectronic GmbH (Temic) sowie deren Schwester- und Tochtergesellschaften. Sie dürfen ohne vorherige schriftliche Genehmigung durch Teves und Temic nicht kopiert, verteilt oder auf andere Weise offenbart oder verwertet werden. Alle Rechte vorbehalten.

Confidential and proprietary. This document and its contents are the exclusive property of Continental Teves AG & Co. OHG (Teves) and Conti Temic microelectronic GmbH (Temic) and their associated companies. They are not to be copied, distributed, or otherwise disclosed or used without the prior written consent of Teves and Temic.
All rights reserved.

Stop (StopRoutineByLocalIdentifier)

Definition of the request Block :

Byte-No.	Description	Value (hex)	Send direction
1	Block title	0x32	Tester -> ECU
2	routineLocalIdentifier	0xB8	
3	Reference number (High)	0xZ1	
4	Reference number (Low)	0xZ2	

Definition of the response block:

Byte-No.	Description	Value (hex)	Send direction
1	Block title	0x72	ECU -> Tester
2	routineLocalIdentifier	0xB8	
3	Reference number (High)	0xZ1	
4	Reference number (Low)	0xZ2	
5	Function was exited without result	0x62	

Vertrauliches Eigentum. Dieser Informationsträger und die darin enthaltenen Informationen sind ausschließliches Eigentum der Continental Teves AG & Co. OHG (Teves) und der Conti Temic microelectronic GmbH (Temic) sowie deren Schwester- und Tochtergesellschaften. Sie dürfen ohne vorherige schriftliche Genehmigung durch Teves und Temic nicht kopiert, verteilt oder auf andere Weise offenbart oder verwertet werden. Alle Rechte vorbehalten.

Confidential and proprietary. This document and its contents are the exclusive property of Continental Teves AG & Co. OHG (Teves) and Conti Temic microelectronic GmbH (Temic) and their associated companies. They are not to be copied, distributed, or otherwise disclosed or used without the prior written consent of Teves and Temic. All rights reserved.

For basic setting 01 :	0xZ1 - 0x00
	0xZ2 - 0x01
For actuator test:	0xZ1 - 0x01
	0xZ2 - 0x02
For adaption:	0xZ1 - 0x01
	0xZ2 - 0x03
For parameterization	0xZ1 - 0x01
	0xZ2 - 0x04
For MWB read:	0xZ1 - 0x01
	0xZ2 - 0x06
For booster test:	0xZ1 - 0x00
	0xZ2 - 0x1F
For deactivating plausibility monitoring	0xZ1 - 0x00
	0xZ2 - 0x28
For CCP enabled :	0xZ1 - 0x00
	0xZ2 - 0x29
For resetting DDS:	0xZ1 - 0x00
	0xZ2 - 0x2A
For CCP disabled:	0xZ1 - 0x00
	0xZ2 - 0x30
For steering angle sensor calibration:	0xZ1 - 0x00
	0xZ2 - 0x3C
For lateral acceleration sensor calibration:	0xZ1 - 0x00
	0xZ2 - 0x3F
For pressure sensor calibration:	0xZ1 - 0x00
	0xZ2 - 0x42
For longitudinal acceleration sensor calibration:	0xZ1 - 0x00
	0xZ2 - 0x45
For ESC EOL test activation:	0xZ1 - 0x00
	0xZ2 - 0x5D
For ESC band EOL test deactivation:	0xZ1 - 0x00
	0xZ2 - 0x67

Vertrauliches Eigentum. Dieser Informationsträger und die darin enthaltenen Informationen sind ausschließliches Eigentum der Continental Teves AG & Co. OHG (Teves) und der Conti Temic microelectronic GmbH (Temic) sowie deren Schwester- und Tochtergesellschaften. Sie dürfen ohne vorherige schriftliche Genehmigung durch Teves und Temic nicht kopiert, verteilt oder auf andere Weise offenbart oder verwertet werden. Alle Rechte vorbehalten.

Confidential and proprietary. This document and its contents are the exclusive property of Continental Teves AG & Co. OHG (Teves) and Conti Temic microelectronic GmbH (Temic) and their associated companies. They are not to be copied, distributed, or otherwise disclosed or used without the prior written consent of Teves and Temic.
All rights reserved.

Start Actuator Test

Definition of the request Block :

Byte-No.	Description	Value (hex)	Send direction
1	Block title	0x31	Tester -> ECU
2	routineLocalIdentifier	0xB8	
3	Reference number for actuator Test	0x01	
4	Reference number for actuator Test	0x02	

Definition of the response block:

Byte-No.	Description	Value (hex)	Send direction
1	Block title	0x71	ECU -> Tester
2	routineLocalIdentifier	0xB8	
3	Reference number for actuator Test	0x01	
4	Reference number for actuator Test	0x02	

Vertrauliches Eigentum. Dieser Informationsträger und die darin enthaltenen Informationen sind ausschließliches Eigentum der Continental Teves AG & Co. OHG (Teves) und der Conti Temic microelectronic GmbH (Temic) sowie deren Schwester- und Tochtergesellschaften. Sie dürfen ohne vorherige schriftliche Genehmigung durch Teves und Temic nicht kopiert, verteilt oder auf andere Weise offenbart oder verwertet werden. Alle Rechte vorbehalten.

Confidential and proprietary. This document and its contents are the exclusive property of Continental Teves AG & Co. OHG (Teves) and Conti Temic microelectronic GmbH (Temic) and their associated companies. They are not to be copied, distributed, or otherwise disclosed or used without the prior written consent of Teves and Temic. All rights reserved.

Calling Diagram::

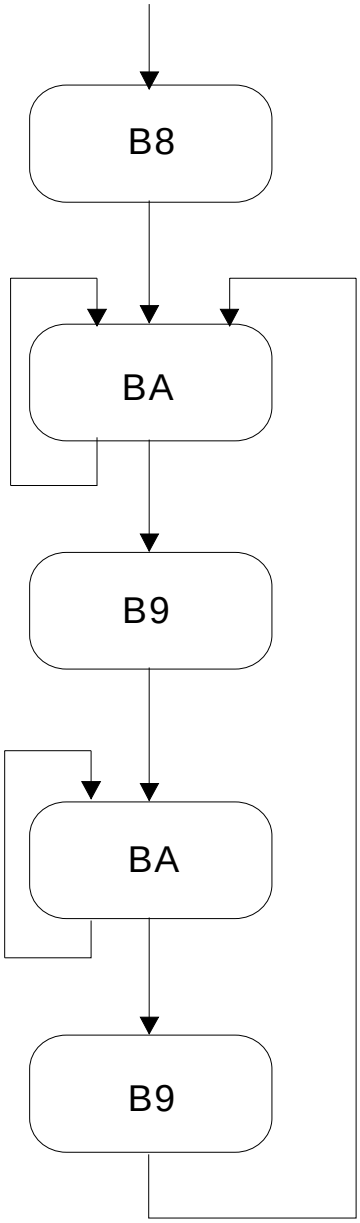

Actuator Test
See 6.3

Functions Progress Inquiry
Actuator Status
See 6.4

Functions Progress Continue
Operate actuators
See 6.5

Functions Progress Inquiry
Actuator Status
See 6.6

Functions Progress Continue
Stop actuators
See 6.7

The routine can be stopped at any time.

Vertrauliches Eigentum. Dieser Informationsträger und die darin enthaltenen Informationen sind ausschließliches Eigentum der Continental Teves AG & Co. OHG (Teves) und der Conti Temic microelectronic GmbH (Temic) sowie deren Schwester- und Tochtergesellschaften. Sie dürfen ohne vorherige schriftliche Genehmigung durch Teves und Temic nicht kopiert, verteilt oder auf andere Weise offenbart oder verwertet werden. Alle Rechte vorbehalten.

Confidential and proprietary. This document and its contents are the exclusive property of Continental Teves AG & Co. OHG (Teves) and Conti Temic microelectronic GmbH (Temic) and their associated companies. They are not to be copied, distributed, or otherwise disclosed or used without the prior written consent of Teves and Temic. All rights reserved.

Function Progress Inquiry

Definition of the request Block :

Byte-No.	Description	Value (hex)	Send direction
1	Block title	0x31	Tester -> ECU
2	RoutineLocalIdentifier	0xBA	
3	Reference number for actuator test	0x01	
4	Reference number for actuator test	0x02	

Definition of the response block:

Byte-No.	Description	Value (hex)	Send direction
1	Block title	0x71	ECU -> Tester
2	RoutineLocalIdentifier	0xBA	
3	Reference number for Actuator test	0x01	
4	Reference number for Actuator test	0x02	
5	Routine Status	0xzz	
6	Scaling Offset	0x03	
7	Code of next actuators	0xss	
8	Code of next actuators	0xss	
9	Scaling Offset	0xFF	

The activation of the first actuator is started here.

Routine Status 0xzz: 03 – Next step
09 - Tester proceeds automatically with next step

The routine status 0xzz = 03 is transmitted only once. Then, the ECU always transmits the routine status 0xzz = 08.

Actuator code 0xssss: (see next page)

Vertrauliches Eigentum. Dieser Informationsträger und die darin enthaltenen Informationen sind ausschließliches Eigentum der Continental Teves AG & Co. OHG (Teves) und der Conti Temic microelectronic GmbH (Temic) sowie deren Schwester- und Tochtergesellschaften. Sie dürfen ohne vorherige schriftliche Genehmigung durch Teves und Temic nicht kopiert, verteilt oder auf andere Weise offenbart oder verwertet werden. Alle Rechte vorbehalten.

Confidential and proprietary. This document and its contents are the exclusive property of Continental Teves AG & Co. OHG (Teves) and Conti Temic microelectronic GmbH (Temic) and their associated companies. They are not to be copied, distributed, or otherwise disclosed or used without the prior written consent of Teves and Temic. All rights reserved.

Actuator-code Oxssss, which changes in every step within the actuator tests, is as follows:

Step Number	Aktuator function/meaning	Aktuator Code (hex)
1	Pump active	0x04FC
2	---	0x02A1
3	IFL passive, OFL passive	0x02A3
4	IFL active, OFL passive	0x02A4
5	IFL active, OFL active, pump active	0x02A5
6	IFL active, OFL passive	0x02A6
7	IFL passive, OFL passive	0x02A3
8	---	0x02A2
9	---	0x02A1
10	IFR passive, OFR passive	0x02A8
11	IFR active , OFR passive	0x02A9
12	IFR active , OFR active, pump active	0x02AA
13	IFR active , OFR passive	0x02AB
14	IFR passive, OFR passive	0x02A8
15	---	0x02A2
16	---	0x02A1
17	IRL passive, ORL passive	0x02AD
18	IRL active , ORL passive	0x02AE
19	IRL active , ORL active, pump active	0x02AF
20	IRL active , ORL passive	0x02B0
21	IRL passive, ORL passive	0x02AD
22	---	0x02A2
23	---	0x02A1
24	IRR passive, ORR passive	0x02B2
25	IRR active , ORR passive	0x02B3
26	IRR active , ORR active, pumpe active	0x02B4
27	IRR active , ORR passive	0x02B5
28	IRR passive, ORR passive	0x02B2
29	---	0x02A2

The actuator code 0x04AB is displayed in the next step which shows that the actuator test is completed.

Vertrauliches Eigentum. Dieser Informationsträger und die darin enthaltenen Informationen sind ausschließliches Eigentum der Continental Teves AG & Co. OHG (Teves) und der Conti Temic microelectronic GmbH (Temic) sowie deren Schwester- und Tochtergesellschaften. Sie dürfen ohne vorherige schriftliche Genehmigung durch Teves und Temic nicht kopiert, verteilt oder auf andere Weise offenbart oder verwertet werden. Alle Rechte vorbehalten.

Confidential and proprietary. This document and its contents are the exclusive property of Continental Teves AG & Co. OHG (Teves) and Conti Temic microelectronic GmbH (Temic) and their associated companies. They are not to be copied, distributed, or otherwise disclosed or used without the prior written consent of Teves and Temic. All rights reserved.

Relay function sequence

Definition of the request Block :

Byte-No.	Description	Value (hex)	Send direction
1	Block title	0x31	Tester -> ECU
2	routineLocalIdentifier	0xB9	
3	Reference number for actuator test	0x01	
4	Reference number for actuator test	0x02	

Definition of the response block:

Byte-No.	Description	Value (hex)	Send direction
1	Block title	0x71	ECU -> Tester
2	routineLocalIdentifier	0xB9	
3	Reference number for actuator test	0x01	
4	Reference number for actuator test	0x02	

Vertrauliches Eigentum. Dieser Informationsträger und die darin enthaltenen Informationen sind ausschließliches Eigentum der Continental Teves AG & Co. OHG (Teves) und der Conti Temic microelectronic GmbH (Temic) sowie deren Schwester- und Tochtergesellschaften. Sie dürfen ohne vorherige schriftliche Genehmigung durch Teves und Temic nicht kopiert, verteilt oder auf andere Weise offenbart oder verwertet werden. Alle Rechte vorbehalten.

Confidential and proprietary. This document and its contents are the exclusive property of Continental Teves AG & Co. OHG (Teves) and Conti Temic microelectronic GmbH (Temic) and their associated companies. They are not to be copied, distributed, or otherwise disclosed or used without the prior written consent of Teves and Temic. All rights reserved.

Query function sequence

Definition of the request block :

Byte-No.	Description	Value (hex)	Send direction
1	Block title	0x31	Tester -> ECU
2	RoutineLocalIdentifier	0xBA	
3	Reference number for actuator test	0x01	
4	Reference number for actuator test	0x02	

Definition of the response block:

Byte-No.	Description	Value (hex)	Send direction
1	Block title	0x71	ECU -> Tester
2	RoutineLocalIdentifier	0xBA	
3	Reference number for actuator test	0x01	
4	Reference number for actuator test	0x02	
5	Routine Status = ??	0xxx	

Routine Status 0xxx: 02 - Function running
05 - Function terminated by controller

Vertrauliches Eigentum. Dieser Informationsträger und die darin enthaltenen Informationen sind ausschließliches Eigentum der Continental Teves AG & Co. OHG (Teves) und der Conti Temic microelectronic GmbH (Temic) sowie deren Schwester- und Tochtergesellschaften. Sie dürfen ohne vorherige schriftliche Genehmigung durch Teves und Temic nicht kopiert, verteilt oder auf andere Weise offenbart oder verwertet werden. Alle Rechte vorbehalten.

Confidential and proprietary. This document and its contents are the exclusive property of Continental Teves AG & Co. OHG (Teves) and Conti Temic microelectronic GmbH (Temic) and their associated companies. They are not to be copied, distributed, or otherwise disclosed or used without the prior written consent of Teves and Temic. All rights reserved.

Response if no further actuator is implemented:

Byte-No.	Description	Value (hex)	Send direction
1	Block title	0x71	ECU -> Tester
2	routineLocalIdentifier	0xBA	
3	Reference number for actuator test	0x01	
4	Reference number for actuator test	0x02	
5	Routine Status = function waiting	0x03	
6	Scaling Offset	0x03	
7	Code END of actuator	0x04	
8	Code END of actuator	0xAB	
9	Scaling Offset	0xFF	

Response when test is finished:

Byte-No.	Description	Value (hex)	Send direction
1	Block title	0x71	ECU -> Tester
2	routineLocalIdentifier	0xBA	
3	Reference number for actuator test	0x01	
4	Reference number for actuator test	0x02	
5	Routine Status = Function finished	0x05	

Vertrauliches Eigentum. Dieser Informationsträger und die darin enthaltenen Informationen sind ausschließliches Eigentum der Continental Teves AG & Co. OHG (Teves) und der Conti Temic microelectronic GmbH (Temic) sowie deren Schwester- und Tochtergesellschaften. Sie dürfen ohne vorherige schriftliche Genehmigung durch Teves und Temic nicht kopiert, verteilt oder auf andere Weise offenbart oder verwertet werden. Alle Rechte vorbehalten.

Confidential and proprietary. This document and its contents are the exclusive property of Continental Teves AG & Co. OHG (Teves) and Conti Temic microelectronic GmbH (Temic) and their associated companies. They are not to be copied, distributed, or otherwise disclosed or used without the prior written consent of Teves and Temic. All rights reserved.

Relay function sequence

Definition of the request block :

Byte-No.	Description	Value (hex)	Send direction
1	Block title	0x31	Tester -> ECU
2	routineLocalIdentifier	0xB9	
3	Reference number for actuator test	0x01	
4	Reference number for actuator test	0x02	

Definition of the response block:

Byte-No.	Description	Value (hex)	Send direction
1	Block title	0x71	ECU -> Tester
2	routineLocalIdentifier	0xB9	
3	Reference number for actuator test	0x01	
4	Reference number for actuator test	0x02	

The control unit ends the activation of the actuator.
.

Vertrauliches Eigentum. Dieser Informationsträger und die darin enthaltenen Informationen sind ausschließliches Eigentum der Continental Teves AG & Co. OHG (Teves) und der Conti Temic microelectronic GmbH (Temic) sowie deren Schwester- und Tochtergesellschaften. Sie dürfen ohne vorherige schriftliche Genehmigung durch Teves und Temic nicht kopiert, verteilt oder auf andere Weise offenbart oder verwertet werden. Alle Rechte vorbehalten.

Confidential and proprietary. This document and its contents are the exclusive property of Continental Teves AG & Co. OHG (Teves) and Conti Temic microelectronic GmbH (Temic) and their associated companies. They are not to be copied, distributed, or otherwise disclosed or used without the prior written consent of Teves and Temic.
All rights reserved.

7 Basic Setting

The basic setting is not possible at undervoltage, at wheel speeds > 5 km/h and in the event of errors resulting in shutdown.

Start Basic Setting

Definition of the request block :

Byte-No.	Description	Value (hex)	Send direction
1	Block title	0x31	Tester -> ECU
2	routineLocalIdentifier	0xB8	
3	Reference number for basic setting 01	0x00	
4	Reference number for basic setting 01	0x01	

Definition of the response block:

Byte-No.	Description	Value (hex)	Send direction
1	Block title	0x71	ECU -> Tester
2	routineLocalIdentifier	0xB8	
3	Reference number for basic setting 01	0x00	
4	Reference number for basic setting 01	0x01	

Vertrauliches Eigentum. Dieser Informationsträger und die darin enthaltenen Informationen sind ausschließliches Eigentum der Continental Teves AG & Co. OHG (Teves) und der Conti Temic microelectronic GmbH (Temic) sowie deren Schwester- und Tochtergesellschaften. Sie dürfen ohne vorherige schriftliche Genehmigung durch Teves und Temic nicht kopiert, verteilt oder auf andere Weise offenbart oder verwertet werden. Alle Rechte vorbehalten.

Confidential and proprietary. This document and its contents are the exclusive property of Continental Teves AG & Co. OHG (Teves) and Conti Temic microelectronic GmbH (Temic) and their associated companies. They are not to be copied, distributed, or otherwise disclosed or used without the prior written consent of Teves and Temic. All rights reserved.

Flowchart::

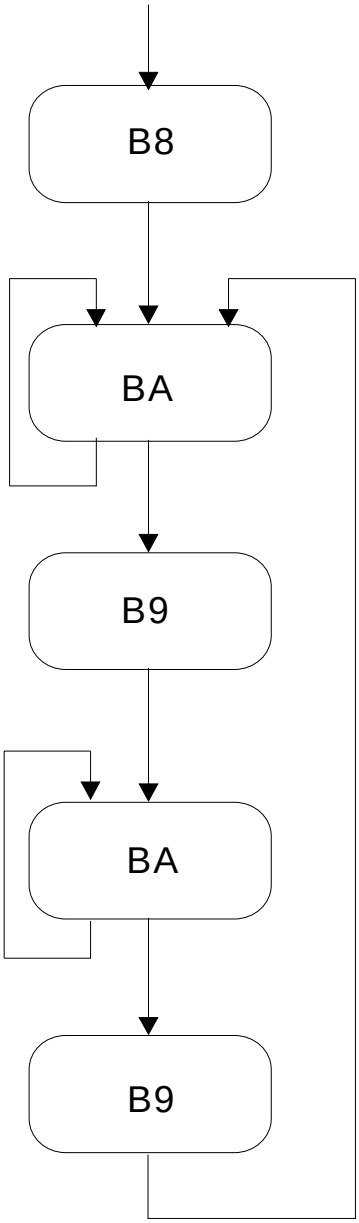

Start Basic Setting
See 7.1

Functions Progress Inquiry 1
See 7.2

Functions Progress Continue
See 7.3

Functions Progress Inquiry 2
See 7.4

Functions Progress Continue
See 7.3

The routine is automatically ended after 17 cycles. (refer to chapter 10.4)
The routine can be stopped at any time.

Vertrauliches Eigentum. Dieser Informationsträger und die darin enthaltenen Informationen sind ausschließliches Eigentum der Continental Teves AG & Co. OHG (Teves) und der Conti Temic microelectronic GmbH (Temic) sowie deren Schwester- und Tochtergesellschaften. Sie dürfen ohne vorherige schriftliche Genehmigung durch Teves und Temic nicht kopiert, verteilt oder auf andere Weise offenbart oder verwertet werden. Alle Rechte vorbehalten.

Confidential and proprietary. This document and its contents are the exclusive property of Continental Teves AG & Co. OHG (Teves) and Conti Temic microelectronic GmbH (Temic) and their associated companies. They are not to be copied, distributed, or otherwise disclosed or used without the prior written consent of Teves and Temic.
All rights reserved.

Query 1 function sequence

Definition of the request Block :

Byte-No.	Description	Value (hex)	Send direction
1	Block title	0x31	Tester -> ECU
2	routineLocalIdentifier	0xBA	
3	Reference number for basic setting 01	0x00	
4	Reference number for basic setting 01	0x01	

Definition of the response block:

Byte-No.	Description	Value (hex)	Send direction
1	Block title	0x71	ECU -> Tester
2	routineLocalIdentifier	0xBA	
3	Reference number for basic setting 01	0x00	
4	Reference number for basic setting 01	0x01	
5	Routine Status = MWA with basic setting	0x07	
6	Standard display number	0x25	
7	Scaling value	0x00	
8	Measured value	0x41	
9	Standard display number	0x25	
10	Scaling value	0x00	
11	Measured value	0x42	
12	Standard display number	0x25	
13	Scaling value	0x00	
14	Measured value	0x43	
15	Standard display number	0x25	
16	Scaling value	0x00	
17	Measured value	0x44	

Vertrauliches Eigentum. Dieser Informationsträger und die darin enthaltenen Informationen sind ausschließliches Eigentum der Continental Teves AG & Co. OHG (Teves) und der Conti Temic microelectronic GmbH (Temic) sowie deren Schwester- und Tochtergesellschaften. Sie dürfen ohne vorherige schriftliche Genehmigung durch Teves und Temic nicht kopiert, verteilt oder auf andere Weise offenbart oder verwertet werden. Alle Rechte vorbehalten.

Confidential and proprietary. This document and its contents are the exclusive property of Continental Teves AG & Co. OHG (Teves) and Conti Temic microelectronic GmbH (Temic) and their associated companies. They are not to be copied, distributed, or otherwise disclosed or used without the prior written consent of Teves and Temic. All rights reserved.

When changing a BLS, the SG valves (OFL, OFR, ORL, ORR) are activated for 5 seconds and then the pump is activated for 5 seconds.
A response block is output with the following contents if a request block is transmitted after the aforementioned 10 seconds have expired:

Definition of response block:

Byte-No.	Description	Value (hex)	Send direction
1	Block title	0x71	ECU -> Tester
2	routineLocalIdentifier	0xBA	
3	Reference number for basic setting 01	0x00	
4	Reference number for basic setting 01	0x01	
5	Routine Status = MWA mit basic setting.	0x07	
6	Standard display number	0x25	
7	Scaling value	0x00	
8	Measured value	0x45	
9	Standard display number	0x25	
10	Scaling value	0x00	
11	Measured value	0x46	
12	Standard display number	0x25	
13	Scaling value	0x00	
14	Measured value	0x47	
15	Standard display number	0x25	
16	Scaling value	0x02	
17	Measured value	0xDD	

Vertrauliches Eigentum. Dieser Informationsträger und die darin enthaltenen Informationen sind ausschließliches Eigentum der Continental Teves AG & Co. OHG (Teves) und der Conti Temic microelectronic GmbH (Temic) sowie deren Schwester- und Tochtergesellschaften. Sie dürfen ohne vorherige schriftliche Genehmigung durch Teves und Temic nicht kopiert, verteilt oder auf andere Weise offenbart oder verwertet werden. Alle Rechte vorbehalten.

Confidential and proprietary. This document and its contents are the exclusive property of Continental Teves AG & Co. OHG (Teves) and Conti Temic microelectronic GmbH (Temic) and their associated companies. They are not to be copied, distributed, or otherwise disclosed or used without the prior written consent of Teves and Temic.
All rights reserved.

Relay function sequence

Definition of the request block :

Byte-No.	Description	Value (hex)	Send direction
1	Block title	0x31	Tester -> ECU
2	routineLocalIdentifier	0xB9	
3	Reference number for basic setting 01	0x00	
4	Reference number for basic setting 01	0x01	

Definition of the response block:

Byte-No.	Description	Value (hex)	Send direction
1	Block title	0x71	ECU -> Tester
2	routineLocalIdentifier	0xB9	
3	Reference number for basic setting 01	0x00	
4	Reference number for basic setting 01	0x01	

Vertrauliches Eigentum. Dieser Informationsträger und die darin enthaltenen Informationen sind ausschließliches Eigentum der Continental Teves AG & Co. OHG (Teves) und der Conti Temic microelectronic GmbH (Temic) sowie deren Schwester- und Tochtergesellschaften. Sie dürfen ohne vorherige schriftliche Genehmigung durch Teves und Temic nicht kopiert, verteilt oder auf andere Weise offenbart oder verwertet werden. Alle Rechte vorbehalten.

Confidential and proprietary. This document and its contents are the exclusive property of Continental Teves AG & Co. OHG (Teves) and Conti Temic microelectronic GmbH (Temic) and their associated companies. They are not to be copied, distributed, or otherwise disclosed or used without the prior written consent of Teves and Temic. All rights reserved.

Query 2 function sequence

Definition of the request block :

Byte-No.	Description	Value (hex)	Send direction
1	Block title	0x31	Tester -> ECU
2	routineLocalIdentifier	0xBA	
3	Reference number for basic setting 01	0x00	
4	Reference number for basic setting 01	0x01	

Definition of the response block:

Byte-No.	Description	Value (hex)	Send direction
1	Block title	0x71	ECU -> Tester
2	routineLocalIdentifier	0xBA	
3	Reference number for basic setting 01	0x00	
4	Reference number for basic setting 01	0x01	
5	Routine Status = MWA with basic setting.	0x07	
6	Standard display number	0x25	
7	Scaling value	0x00	
8	Measured value	0x49	
9	Standard display number	0x25	
10	Scaling value	0x00	
11	Measured value	0x4A	
12	Standard display number	0x25	
13	Scaling value	0x00	
14	Measured value	0x4B	
15	Standard display number	0x25	
16	Scaling value	0x02	
17	Measured value	0xDE	

Filling the Hydraulic Unit

Vertrauliches Eigentum. Dieser Informationsträger und die darin enthaltenen Informationen sind ausschließliches Eigentum der Continental Teves AG & Co. OHG (Teves) und der Conti Temic microelectronic GmbH (Temic) sowie deren Schwester- und Tochtergesellschaften. Sie dürfen ohne vorherige schriftliche Genehmigung durch Teves und Temic nicht kopiert, verteilt oder auf andere Weise offenbart oder verwertet werden. Alle Rechte vorbehalten.

Confidential and proprietary. This document and its contents are the exclusive property of Continental Teves AG & Co. OHG (Teves) and Conti Temic microelectronic GmbH (Temic) and their associated companies. They are not to be copied, distributed, or otherwise disclosed or used without the prior written consent of Teves and Temic.
All rights reserved.

The filling of the hydraulic is only possible after successful “Coding 2”.

Definition of the request Block :

Byte-No.	Description	Value (hex)	Send direction
1	Block title	0x31	Tester -> ECU
2	routineLocalIdentifier	0xB8	
3	Reference number	0x00	
4	Reference number	0x32	

Definition of Response block:

Byte-No.	Description	Value (hex)	Send direction
1	Block title	0x71	ECU -> Tester
2	routineLocalIdentifier	0xB8	
3	Reference number	0x00	
4	Reference number	0x32	

The system operates the SG-Valves (OFL, OFR, ORL, ORR).
The maximum operation time of SG-Valves is limited to 90sec.

Vertrauliches Eigentum. Dieser Informationsträger und die darin enthaltenen Informationen sind ausschließliches Eigentum der Continental Teves AG & Co. OHG (Teves) und der Conti Temic microelectronic GmbH (Temic) sowie deren Schwester- und Tochtergesellschaften. Sie dürfen ohne vorherige schriftliche Genehmigung durch Teves und Temic nicht kopiert, verteilt oder auf andere Weise offenbart oder verwertet werden. Alle Rechte vorbehalten.

Confidential and proprietary. This document and its contents are the exclusive property of Continental Teves AG & Co. OHG (Teves) and Conti Temic microelectronic GmbH (Temic) and their associated companies. They are not to be copied, distributed, or otherwise disclosed or used without the prior written consent of Teves and Temic.
All rights reserved.

Definition of the request Block :

Byte-No.	Description	Value (hex)	Send direction
1	Block title	0x31	Tester -> ECU
2	routineLocalIdentifier	0xBA	
3	Reference number	0x00	
4	Reference number	0x32	

Definition of Response block:

Byte-No.	Description	Value (hex)	Send direction
1	Block title	0x71	ECU -> Tester
2	routineLocalIdentifier	0xBA	
3	Reference number	0x00	
4	Reference number	0x32	
5	Routine Status =Filling	0x06	
6	Standard display number	0x25	
7	Scaling value	0x00	
8	MeasuredValue	0x55	
9	Standard display number	0x25	
10	Scaling value	0x00	
11	Measured value	0x56	
12	Standard display number	0x25	
13	Scaling value	0x00	
14	Measured value	0x57	
15	Standard display number	0x25	
16	Scaling value	0x00	
17	Measured value	0x58	

Vertrauliches Eigentum. Dieser Informationsträger und die darin enthaltenen Informationen sind ausschließliches Eigentum der Continental Teves AG & Co. OHG (Teves) und der Conti Temic microelectronic GmbH (Temic) sowie deren Schwester- und Tochtergesellschaften. Sie dürfen ohne vorherige schriftliche Genehmigung durch Teves und Temic nicht kopiert, verteilt oder auf andere Weise offenbart oder verwertet werden. Alle Rechte vorbehalten.

Confidential and proprietary. This document and its contents are the exclusive property of Continental Teves AG & Co. OHG (Teves) and Conti Temic microelectronic GmbH (Temic) and their associated companies. They are not to be copied, distributed, or otherwise disclosed or used without the prior written consent of Teves and Temic. All rights reserved.

8 Coding 2

This function allocates the access rights for the “filling of the hydraulics” services and EOL commands.

Start Sequence

Before every “Coding 2“ request the following start sequence will be sent:

Definition of the request block:

Byte-No.	Description	Value (hex)	Send direction
1	Block title	0x31	Tester -> ECU
2	Local Identifier	0xB8	
3	Reference number for coding 2	0x01	
4	Reference number for coding 2	0x05	

Definition of the response block:

Byte-No.	Description	Value (hex)	Send direction
1	Block title	0x71	ECU -> Tester
2	Local Identifier	0xB8	
3	Reference number for coding 2	0x01	
4	Reference number for coding 2	0x05	

Vertrauliches Eigentum. Dieser Informationsträger und die darin enthaltenen Informationen sind ausschließliches Eigentum der Continental Teves AG & Co. OHG (Teves) und der Conti Temic microelectronic GmbH (Temic) sowie deren Schwester- und Tochtergesellschaften. Sie dürfen ohne vorherige schriftliche Genehmigung durch Teves und Temic nicht kopiert, verteilt oder auf andere Weise offenbart oder verwertet werden. Alle Rechte vorbehalten.

Confidential and proprietary. This document and its contents are the exclusive property of Continental Teves AG & Co. OHG (Teves) and Conti Temic microelectronic GmbH (Temic) and their associated companies. They are not to be copied, distributed, or otherwise disclosed or used without the prior written consent of Teves and Temic. All rights reserved.

Definition of the request block :

Byte-No.	Description	Value (hex)	Send direction
1	Block title	0x3B	Tester -> ECU
2	RecordLocalIdentifier	0x9A	
3	recordValue1 (Workshop code)	0xww	
4	recordValue2 (Workshop code)	0xww	
5	recordValue3 (Workshop code)	0xww	
6	recordValue4 (Workshop code)	0xww	
7	recordValue5 (Workshop code)	0xww	
8	recordValue6 (Workshop code)	0xww	
9	recordValue7 (Prog/Data status)	0xpp	
10	recordValue8 (Prog/Data status)	0xpp	
11	recordValue9 (Prog/Data status)	0xdd	
12	recordValue10 (Prog/Data status)	0xdd	
13	recordValue11 (Coding table)	0x03	
14	recordValue12 (Coding byte1)	0x80	
15	recordValue13 (Coding byte2)	0xc1	
16	recordValue14 (Coding byte3)	0xc2	

Definition of the response block:

Byte-No.	Description	Value (hex)	Send direction
1	Block title	0x7B	ECU -> Tester
2	RecordLocalIdentifier	0x9A	

0xc1: Coding2 Code High Byte
0xc2: Coding2 Code Low Byte

<u>Coding2 Codes:</u>

Filling the Hydraulic:	6037d	0x1795
End of Line	10149d	0x27A5

Vertrauliches Eigentum. Dieser Informationsträger und die darin enthaltenen Informationen sind ausschließliches Eigentum der Continental Teves AG & Co. OHG (Teves) und der Conti Temic microelectronic GmbH (Temic) sowie deren Schwester- und Tochtergesellschaften. Sie dürfen ohne vorherige schriftliche Genehmigung durch Teves und Temic nicht kopiert, verteilt oder auf andere Weise offenbart oder verwertet werden. Alle Rechte vorbehalten.

Confidential and proprietary. This document and its contents are the exclusive property of Continental Teves AG & Co. OHG (Teves) and Conti Temic microelectronic GmbH (Temic) and their associated companies. They are not to be copied, distributed, or otherwise disclosed or used without the prior written consent of Teves and Temic. All rights reserved.