中国汽车工程研究院股份有限公司
China Automotive Engineering Research Institute Co., Ltd.

Version Management

Revision	Date	Editor	Reviewed by	Approved by	Section	Changes Comments
1	2015/6/30	YangLiangYi			All	Initial revision

声明：本材料涉及内容仅用于项目内部使用，未经授权不可复制

Legend - CAN
参数说明 - CAN

<table>
<tr><th>Property
属性</th><th>Description
描述</th><th>Remarks
备注</th></tr>
<tr><td>ECU (Tx)
发送ECU</td><td>ECU name that sends the described message and signal
发送相应报文和信号的ECU名称</td><td></td></tr>
<tr><td>Msg Name
报文名称</td><td>Message name
报文名称</td><td>eg. BCM_1 - BCM transfers message
举例：BCM_1为节点BCM发送的报文</td></tr>
<tr><td>MsgID
报文标识符</td><td>Message identifier
报文标识符</td><td></td></tr>
<tr><td>Msg Length (bytes)
报文长度</td><td>Byte length of the message
报文的字节长度</td><td></td></tr>
<tr><td>Msg Send Type
报文发送类型</td><td>Send type for the message.
报文的发送类型
Send type:"Periodic", "Event", "IfActive", "POE" and "PA"
发送类型："Periodic", "Event", "IfActive", "POE" and "PA"</td><td>“ POE - Period On Event ” , " PA - Period if Active "</td></tr>
<tr><td>Message Cycle Time (ms)
报文周期时间（ms）</td><td>Cycle time of the message if it should be sent cyclically
报文发送周期时间（仅对周期性发送报文）</td><td>Unit: ms
单位：毫秒</td></tr>
<tr><td>Start Byte Position/Start Bit Position
起始字节位置/起始位位置</td><td>Mapped start position of the signal by "Motorola forward LSB" format.
It indicates the lsb (least significant bit) of LSB (least significant byte) from beginning of the message. (See the figure on the right).
Bitwise to the left, bytewise to the up (from</td><td>
<table>
<tr><th></th><th>Bit7</th><th>Bit6</th><th>Bit5</th><th>Bit4</th><th>Bit3</th><th>Bit2</th><th>Bit1</th><th>Bit0</th></tr>
<tr><td>Byte 0</td><td>7</td><td>6</td><td>5</td><td>4</td><td>3</td><td>2</td><td>1</td><td>0</td></tr>
<tr><td>Byte 1</td><td>15</td><td>14</td><td>13</td><td>12</td><td>11</td><td>10</td><td>9</td><td>8</td></tr>
<tr><td>Byte 2</td><td>23</td><td>22</td><td>21</td><td>20</td><td>19</td><td>18</td><td>17</td><td>16</td></tr>
<tr><td>Byte 3</td><td>31</td><td>30</td><td>29</td><td>28</td><td>27</td><td>26</td><td>25</td><td>24</td></tr>
<tr><td>Byte 4</td><td>39</td><td>38</td><td>37</td><td>36</td><td>35</td><td>34</td><td>33</td><td>32</td></tr>
<tr><td>Byte 5</td><td>47</td><td>46</td><td>45</td><td>44</td><td>43</td><td>42</td><td>41</td><td>40</td></tr>
<tr><td>Byte 6</td><td>55</td><td>54</td><td>53</td><td>52</td><td>51</td><td>50</td><td>49</td><td>48</td></tr>
<tr><td>Byte 7</td><td>63</td><td>62</td><td>61</td><td>60</td><td>59</td><td>58</td><td>57</td><td>56</td></tr>
</table>
<table>
<tr><th>Byte</th><th>Bit7</th><th>Bit6</th><th>Bit5</th><th>Bit4</th><th>Bit3</th><th>Bit2</th><th>Bit1</th><th>Bit0</th></tr>
<tr><td>Byte 0</td><td></td><td></td><td></td><td></td><td>msb</td><td>----</td><td>----</td><td>----</td></tr>
<tr><td>Byte 1</td><td><---</td><td>----</td><td>----</td><td>----</td><td>----</td><td>----</td><td>----</td><td>lsb</td></tr>
<tr><td>Byte 2</td><td></td><td></td><td></td><td></td><td></td><td></td><td></td><td></td></tr>
<tr><td>Byte 3</td><td></td><td></td><td></td><td></td><td></td><td></td><td></td><td></td></tr>
</table>
</td></tr>
<tr><td>Signal Length
信号长度</td><td>Bit length of the signal
信号的位长度</td><td></td></tr>
<tr><td>Signal Name (Label)
信号名称（名称）</td><td>Signal Name
信号名称</td><td></td></tr>
<tr><td>Signal Comment
信号描述</td><td>Comment for the signal
信号描述</td><td></td></tr>
<tr><td>Invalid Value (hex)
无效值（十六进制）</td><td>Invalid value in hex value
十六进制表述的无效值</td><td></td></tr>
</table>

Signal Value Description	Hex-physics representation of the signal value	
Receiving ECUs **接收ECUs**	It indicates which ECUs receive the signals. If "R" is marked, the ECU receives the signal.	One column for each ECU - e.g. BCM, ICM, … 每列代表一个ECU，如BCM，ICM等。
Receiving ECUs ***接收ECUs***	It indicates which ECUs receive the signals. If "T" is marked, the ECU receives the signal.	One column for each ECU - e.g. BCM, ICU, … 每列代表一个ECU，如BCM，ICU等。
Gatewayed Signals **网关转发信号**	It indicates whether the gateway need transmit this signal. If "R/T" is marked, thegateway need transmit the signal. 指示了信号是否需要网关转发。如果标为“R/T”，网关需要转发此信号。	Yes or No 是或否
Remark **特别说明**	-	

CAN1报文列表

ECU	Msg.Name	Msg.ID (hex)	Msg.Length (bytes)	Msg Send Type	Msg.Cycle Time (ms)	Busload at 500kbps (tbit:ms)
ABS	ABS1	0x311	8	Periodic	20	1.306%
	ABS2	0x2EA	8	Periodic	20	1.306%
EPS	EPS	0x230	8	Periodic	20	1.306%
BCM	BCM	0x392	8	Periodic	20	1.306%
MP5	MP5	0x5A0	8	Periodic	100	0.261%
ICU	ICU	0x431	8	Periodic	20	1.306%
MCU	MCU1	0xB9	8	Periodic	10	2.612%
	MCU2	0xBA	8	Periodic	20	1.306%
	MCU3	0x6B7	8	PA	1000	0.026%
VCU	VCU1	0x101	8	Periodic	10	2.612%
	VCU2	0x6B0	8	PA	1000	0.026%
	VCU3	0x6B2	8	POE		0.000%
BMS	BMS1	0x1A0	8	Periodic	10	2.612%
	BMS2	0x1A1	8	Periodic	10	2.612%
	BMS3	0x1A2	8	Periodic	100	0.261%
	BMS4	0x6C0	8	PA	1000	0.026%
	CCS1	0x371	8	Periodic	200	0.131%
	CCS2	0x6C7	8	PA	1000	0.026%
诊断设备	OBDII	0x6A1	8	Event		0.000%
DC/DC	DC/DC1	0x324	8	Periodic	100	0.261%
	总负载率					19.303%

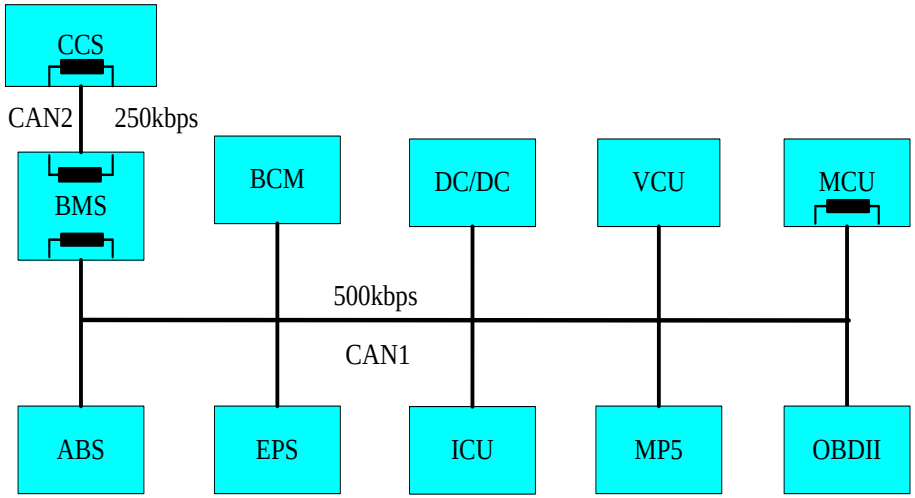

网络拓扑

注:CAN1网络，MCU、BMS增加120Ω 终端电阻，其它节点不需要增加

HA31 CAN通讯协议（CAN1） 20150630

ID	Transmitter ECU	Period (ms)	Type	Length	Description
0x311	ABS	20	P	64 bits	ABS1

SignalName	Convention	LSB	Length	Event Trans.	Conversion	Invalid	Default/ Init	Nodelist										Comment
								VCU	MCU	BMS	ABS	EPS	DCDC	BCM	MP5	ICU	OBDII	
FLWheelSpeed	(11, 13)	11	13		DataType:Unsigned Range high:360 Range low:0 Conversion:(D)* 0.05625 Unit:k /h	0x1FFF	0	R			T					R		Current wheel speed information of front left wheel. For ABS the valid range high is 260,but for ESP the valid range high is 360
FLWheelSpeedValidData	(10, 1)	10	1		1:Valid 0:Not valid		0	R			T					R		Quality/fault information to current wheel speed information of front left wheel.
FRWheelSpedValidData	(9, 1)	9	1		1:Valid 0:Not valid		0	R			T					R		
VehicleSpeedVSOSigValidData	(8,1)	8	1		1:Valid 0:Not valid		0				T	R		R	R	R		
FRWheelSpeed	(27,13)	27	13		Data Type:Unsigned Range high:360 Range low:0 Conversion:(D)* 0.05625 Unit:km/h	0x1FFF	0	R			T					R		Current wheel speed information of front left wheel. For ABS the valid range high is 260,but for ESP the valid range high is 360
ABS_Active	(26,1)	26	1		1:Active 0:Not active		0	R			T							Indication that ABS system currently performs a brake intervention
ABS_Fault	(25,1)	25	1		1:Fault 0:No Fault		1				T					R		ABS system has detected a failure which does not allow a reliable ABS regulation and is therefore
EBD_Fault	(24,1)	24	1		1:Fault 0:No Fault		1				T					R		ABS system has detected a heavy fault,which does not even allow a reliable electronic brake distribution and is therefore completely

VehicleSpee dVSOSig	(43,13)	43	13		Data Type:Unsignede Range high:260 Range low:0 Conversion:(D)* 0.05625 Unit:km/h	0x1FFF	0				T	R		R	R	R		Note:it will be ox 1FFF when the value is more than 260 Km/h
Reserved	(52,7)	52	7		Reserved		0				T							
MessageCounter	(48,4)	48	4		DataType:Num Range High:15 RangeLow:0 Conversion:(D) Unit:		0	R			T							
Check Sum	(56,8)	56	8		Reserved		0	R			T							ch k (B t 0+B t 1 + B t 6) XOR 0xFF

ID	Transmitter ECU	Period (ms)	Type	Length	Description
0x2EA	ABS	20	P	64 bits	ABS2

SignalName	Convention	LSB	Length	Event Trans.	Conversion	Invalid	Default/ Init	Nodelist										Comment
								VCU	MCU	BMS	ABS	EPS	DCDC	BCM	MP5	ICU	OBDII	
RLWheelSpeed	(11, 13)	11	13		DataType:Unsigned Range high:360 Range low:0 Conversion:(D)* 0.05625	0x1FFF	0	R			T					R		For ABS the valid range high is 260,but for ESP the valid range high is 360
RLWheelSpeedValidData	(10,1)	10	1		1:Valid 0:Not valid		0	R			T					R		
RRWheelSpeedValidData	(9,1)	9	1		1:Valid 0:Not valid		0	R			T					R		
Diag_Session_Status	(8,1)	8	1		0: Not Diagnose Mode 1: Diagnose Mode		0				T					R		ABS/ESC is currently in Diagnostic Extended session, need cluster to turn on ESC/TCS, EBD, ABS fault lamp
RRWheelSpeed	(27, 13)	27	13		DataType:Unsigned Range high:360 Range low:0 Conversion:(D)* 0.05625	0x1FFF	0	R			T					R		For ABS the valid range high is 260,but for ESP the valid range high is 360
WssRLEdgesSumValidData	(26, 1)	26	1		1:Valid 0:Not valid		0				T					R		
Reserved	(24, 1)	24	1		Reserved		0											
WssRLEdgesSum	(40, 16)	40	16		DataType:Unsigned Range high:65535 Range low:0 Conversion:(D) Unit:		0				T					R		OdometerIncrease=((Edges sumcurrent-EdgessumOld)/2)*(ActualTy reRollingCircle/PulsesPer Re volution),Only For reference
WssRREdgesSumValidData	(25, 1)	25	1		1:Valid 0:Not valid		0				T					R		

WssRREdgesSum	(56, 16)	56	16		DataType:Unsigned Range high:65535 Range low:0 Conversion:(D) Unit:		0				T					R		OdometerIncrease=((Edges sumcurrent- EdgessumOld)/2)*(ActualTy reRollingCircle/PulsesPer Re volution)

ID	Transmitter ECU	Period (ms)	Type	Length	Description
0x230	EPS	20	P	64 bits	EPS

SignalName	Convention	LSB	Length	EventTrans.	Conversion	Invalid	Default/ Init	Nodelist										Comment
								VCU	MCU	BMS	ABS	EPS	DCDC	BCM	MP5	ICU	OBDII	
SAS_SteeringAngle	(8, 16)	8	16		DataType:Num Range high:2047 Range low: -2048 Conversion:(D) /16-2048	0xFFFF	0xFFFF					T						
SAS_SteeringAngleSpeed	(16, 8)	16	8		DataType:Num Range high:1016 Range low: 0 Conversion:(D) *4 Unit:°/s	0xFFFF	0xFFFF					T						
SAS_SteeringAngleSpeedValidData	(24, 1)	24	1		1:invalid 0:valid		1					T						
SAS_SteeringAngleValidData	(25, 1)	25	1		1:invalid 0:valid		1					T						
SAS_SASCalibrated	(26, 1)	26	1		1:Sensor calibrated 0:Sensor not		0					T						
SAS_Init	(27, 1)	27	1		1:Sensor calibrated 0:Sensor not		0					T						
SAS_CANWarning	(28, 1)	28	1		1:Warning 0:No warning		0					T						
SAS_InternalFailure	(29, 1)	29	1		1:Failure 0:No Failure		0					T						
SAS_BatteryWarning	(30, 1)	30	1		1:Warning 0:No warning		0					T						
SAS_SASFailureSts	(31, 1)	31	1		1:Sensor information invalid 0:sensor information valid		0					T						
SAS_InternalFaultCodeBits	(32, 8)	32	8		0:OK >0: Not Ok		0					T						
SAS_Rolling_Counter	(40, 4)	40	4		DataType:Num Range high:15 Range low: 0 Conversion:(D) Unit:		0					T						
SAS_SwVersion	(44, 4)	44	4		1:SW version for uC2 0:SW version for uC1		0					T						
SAS_SwSecondVersion	(48, 4)	48	4									T						
Reserved	(53, 1)	53	1		Reserved		0					T						
EPS_Fault	(52, 1)	52	1		0:no Fault 1:Fault present		0					T				R		
MotorCurrent	(53, 3)	53	3		DataType:Num Range high:70 Range low: 0 Conversion:(D)*10 Unit:A		0					T						
SAS_CHK_SUM	(56, 8)	56	8		CheckSum=(Byte0+ Byte1 +Byte2 + … + Byte6）XOR 0xFF							T						

ID	Transmitter ECU	Period (ms)	Type	Length	Description
0x392	BCM	20	P	64 bits	BCM

SignalName	Convention	LSB	Length	EventTrans.	Conversion	Invalid	Default/ Init	Nodelist										Comment
								VCU	MCU	BMS	ABS	EPS	DCDC	BCM	MP5	ICU	OBDII	
Alarm Mode	(0, 2)	0	2	No	00:Security LED Off 01:Security LED blinking(normal, no alarm occurred) 10:Security LED fault blinking(alrm occurred) 11:Invalid	0x3	0							T				
ParkingLight Reminder	(2, 1)	2	1	No	1:Active 0:Off		0							T				
KeyReminder	(3, 1)	3	1	No	1:Active 0:Off		0							T		R		Used for ICU warning
TurnRightStatus	(4, 1)	4	1	No	1:Active 0:Off		0							T		R		
TurnLeftStatus	(5, 1)	5	1	No	1:Active 0:Off		0							T		R		
HazardStatus	(6, 1)	6	1	No	1:Active 0:Off		0							T		R		
ParkingLightStatus	(7, 1)	7	1	No	1:Active 0:Off		0							T		R		Indicates Little lamp status
HighBeamStatus	(8, 1)	8	1	No	1:Active 0:Off		0	R		R				T		R		
LowBeamStatus	(9, 1)	9	1	No	1:Active 0:Off		0							T		R		
DriverDoorStatus	(10, 1)	10	1	No	1:Open 0:Closed		0	R						T		R		
PassengerDoorStatus	(11, 1)	11	1	No	1:Open 0:Closed		0	R						T		R		
HoodStatus	(12, 1)	12	1	No	1:Open 0:Closed		0	R						T		R		
RearRightDoorStatus	(13, 1)	13	1	No	1:Open 0:Closed		0	R						T		R		
RearLeftDoorStatus	(14, 1)	14	1	No	1:Open 0:Closed		0	R						T		R		
BackDoorStatus	(15, 1)	15	1	No	1:Open 0:Closed		0	R						T		R		
RearFogStatus	(16, 1)	16	1	No	1:Active 0:Off		0							T		R		
FrontFogStatus	(17, 1)	17	1	No	1:Active 0:Off		0	R						T		R		
RearDefrost	(18, 1)	18	1	No	1:Active 0:Off		0							T				
KeyPosition	(19, 2)	19	2	No	00:Off 01:ACC 10:ON 11:Crank+On		0							T				
Reversed	(21, 1)	21	1				0							T				

KeyInStatus	(22, 1)	22	1		1:Key In 0:Key Out		0							T		R		
DRLStatus	(23, 1)	23	1	No	1:Active 0:Non-active		0							T		R		
FLDoorLockStatus	(24, 1)	24	1		1:Lock 0:Unlock		Last Value	R						T				
FRDoorLockStatus	(25, 1)	25	1		1:Lock 0:Unlock		Last Value	R						T				
RLDoorLockStatus	(26, 1)	26	1		1:Lock 0:Unlock		Last Value	R						T				
RRDoorLockStatus	(27, 1)	27	1		1:Lock 0:Unlock		Last Value	R						T				
TrunkLock Status	(28, 1)	28	1		1:Lock 0:Unlock		Last Value	R						T				
Reversed	(29, 2)	29	2		Reversed		0											
Reversed	(31, 1)	31	1		Reversed		0											
Reversed	(32, 2)	32	2		Reversed		0											
Reversed	(34, 2)	34	2		Reversed		0											
WiperSwitchStatus	(36, 3)	36	3		0=OFF 1=Low 2=High 3=Inter 4=Auto 5-7=Reserved		0							T				
Reversed	(39, 1)	39	1		Reversed		0							T				
Reversed	(40, 2)	40	2		Reversed		0											
Reversed	(42, 2)	42	2		Reversed		0											
Reversed	(44, 2)	44	2		Reversed		0											
Reversed	(46, 2)	46	2		Reversed		0											
Reversed	48, 2)	48	2		Reversed		0											
Reversed	(50, 2)	50	2		Reversed		0											
Reversed	(56, 12)	56	12		Reversed		0											

ID	Transmitter ECU	Period (ms)	Type	Length	Description
0x5A0	MP5	100	PE	64 bits	MP5

SignalName	Convention	LSB	Length	EventTrans.	Conversion	Invalid	Default/ Init	Nodelist										Comment
								VCU	MCU	BMS	ABS	EPS	DCDC	BCM	MP5	ICU	OBDII	
KeyState	(0,3)	0	3		0: KeyRelease 1: KeyShortPress 2: KeyLongPress 3: KeyBlock other: Reserved		0								T	R		
KeyAC	(3,1)	3	1		0: released 1: pressed		0								T			
KeyBlowerUp	(4,1)	4	1		0: released 1: pressed		0								T			
KeyBlowerDown	(5,1)	5	1		0: released 1: pressed		0								T			
KeyFrontDefrost	(6,1)	6	1		0: released 1: pressed		0								T			
KeyRearDefrost	(7,1)	7	1		0: released 1: pressed		0								T			
KeyCycle	(8,1)	8	1		0: released 1: pressed		0								T			
KeyBlowerMode	(9,1)	9	1		0: released 1: pressed		0								T			
TimeHours	(10,5)	10	5		DataType:Num Rang high:24 Rang low:0 Covertion:(D)* Unit: H	0x1F	0								T	R		
Keytripclean	(15,1)	15	1		0: no clean 1: clean		0								T	R		
TimeMinutes	(16,6)	16	6		DataType:Num Rang high:60 Rang low:0 Covertion:(D)* Unit: Min	0x3F	0								T	R		
KeyAC_Select_Uint	(22,1)	22	1		0: released 1: pressed		0								T			
OFF	(23,1)	23	1		0: released 1: pressed		0								T			
TimeSeconds	(24,6)	24	6		DataType:Num Rang high:60 Rang low:0 Covertion:(D)* Unit: S	0x3F	0								T	R		
KeyTemperatureUp	(30,1)	30	1		0: released 1: pressed		0								T			
KeyTemperatureDown	(31,1)	31	1		0: released 1: pressed		0								T			
Reserved	(56,32)	56	32				0								T			

ID	Transmitter ECU	Period (ms)	Type	Length	Description
0x431	ICU	20	P	64 bits	ICU

SignalName	Convention	LSB	Length	EventTrans.	Conversion	Invalid	Default /Init	Nodelist										Comment
								VCU	MCU	BMS	ABS	EPS	DCDC	BCM	MP5	ICU	OBDII	
ParkBrake	(0,1)	0	1	NO	0:Not Parked 1:Parked		0	R	R					R		T		
BrakeFluildLevel	(1,1)	1	1		0:Normal 1:LowLevel		0									T		
Reserved	(2,1)	2	1		Reserved		0									T		
Reserved	(3,1)	3	1		Reserved		0									T		
Reserved	(4,1)	4	1		Reserved		0									T		
Reserved	(5,1)	5	1		Reserved		0									T		
AirbagAlarmLampStatus	(6,2)	6	2	NO	00:No failure 01:Failure 02:NotUsed 03:Invalid	0x3	0									T		
Reserved	(8,8)	8	8		Reserved		0									T		
TotalOdometer_km	(36,20)	36	20	NO	DataType:Num Range high:999999 Range low:0 Conversion:(D) Unit:km	0xFFFFFF								R		T		
Reserved	(35,1)	35	1		Reserved		0									T		
Reserved	(34,1)	34	1		Reserved		0									T		
PassSeatBeltStatus	(32,2)	32	2	NO	0:Not Configured 1:Fault 2:NotBulked 3:Bulked		0									T		
DriverSeatBeltStatus	(46,2)	46	2	NO	0:Not Configured 1:Fault 2:NotBulked 3:Bulked		0									T		
Reserved	(45,1)	45	1		Reserved		0									T		
Reserved	(44,1)	44	1		Reserved		0									T		
Reserved	(43,1)	43	1		Reserved		0									T		
Reserved	(56,19)	56	19		Reserved		0									T		

ID	Transmitter ECU	Period (ms)	Type	Length	Description
0xB9	MCU	10	P	64 bits	MCU1

SignalName	Convention	LSB	Length	EventTrans.	Conversion	Invalid	Default /Init	Nodelist										Comment	特别说明
								VCU	MCU	BMS	ABS	EPS	DCDC	BCM	MP5	ICU	OBDII		
Drv_Motor_Temp	(0,8)	0	8		DataType:Num Range high:200 Range low:0 Conversion:(D) Unit:℃	0xFF	0	R	T							R			新版协议该帧报文与原协议中的DMC1报文信号定义一致；发送周期由原来的20ms修改为10ms；报文ID不变.
Drv_Motor_Speed_RPM	(18,14)	18	14		DataType:Num Range high:8000 Range low:0 Conversion:(D) Unit:rpm	0x3FFF	0	R	T							R			
Drv_Motor_Warning_Level	(16,2)	16	2		0:normal 1:1Level warning(stop) 2:2Level warning(reduce power) 3:3Level warning(continuous running) 4:reserved		0	R	T							R		If DMC_Falt_Sts=4,7,9,13,14,17,18,19,21,40,41,43,45,118,119 Drv_Motor_Warning_Level=1:1Level warning Else if DMC_Flat_Sts=10,11,46,125 Drv_Motor_Warning_Level=2:2Level Else DMC_Flat_Sts=15,117 Drv_Motor_Warning_Level=3:3Level	
Reserved	(24,8)	24	8		reserved		0	R	T										由原来的DMC_Falt_Sts修改为，Reserved
DMC_Self_Check	(37,2)	37	2		00:no finish 01:finish 10:Reserved 11:Reserved		0	R	T										由Reserved修改为DMC_Self_Check
Error_Drv_Motor_Speed_RPM	(39,1)	39	1		0:No error 1:error		0		T							R			
Drv_Motor_Output_Curr_Value	(40,13)	40	13		DataType:Num Range high:800 Range low:0 Conversion:(D)*0.1 OffSet:0 Unit:V	0x1FFF	0	R	T	R						R			
Reserved	(52,4)	52	4		Reserved		0		T										
RollingCounter	(48,4)	48	4		DataType:Num Range high:15 Range low:0 Conversion:(D) Unit:		0	R	T	R						R			
CheckSum	(56,8)	56	8		checksum=(byte0+byte1+byte2+byte3+byte4+byte5+byte6)XOR 0xFF		0	R	T	R						R			

ID	Transmitter ECU	Period (ms)	Type	Length	Description
0xBA	MCU	20	P	64 bits	MCU2

SignalName	Convention	LSB	Length	EventTrans.	Conversion	Invalid	Default /Init	Nodelist										Comment	特别说明
								VCU	MCU	BMS	ABS	EPS	DCDC	BCM	MP5	ICU	OBDII		
ActualTorqueFeedback	(0,8)	0	8		DataType:Num Range high:254 Range low:0 Conversion:(D) Unit:N/m	0xFF	0	R	T							R			新版协议MCU2来源与DMC2
Error_ActualTorqueFeedback	(16,1)	16	1		0:No error 1:error		0	R	T							R			
Reserved	(17,3)	17	3		Reserved		0		T										
Reserved	(20,12)	20	12		Reserved														由原来的Main_Wire_Volt_Value修改为Reserved
DCM_ECU_Temp	(24,7)	24	7		DataType:Num Range high:100 Range low:0 Conversion:(D) Unit:℃	0x7F		R	T							R			
Reserved	(31,1)	31	1		Reserved		0		T										
Reserved	(43,13)	43	13		Reserved		0		T										由原来的Main_Wire_Curr_Value修改为Reserved
Reserved	(52,7)	52	7		Reserved		0		T										
RollingCounter	(48,4)	48	4		DataType:Num Range high:15 Range low:0 Conversion:(D) Unit:		0	R	T							R			
CheckSum	(56,8)	56	8		checksum=(byte0+byte1+byte2+byte3+byte4+byte5+byte6)XOR 0xFF		0	R	T							R			

ID	Transmitter ECU	Period (ms)	Type	Length	Description
0x6B7	MCU	Event/ 1000	PA	64 bits	MCU3故障码广播

SignalName	Convention	LSB	Length	EventTrans.	Conversion	Invalid	Default /Init	Nodelist										Comment	特别说明
								VCU	MCU	BMS	ABS	EPS	DCDC	BCM	MP5	ICU	OBDII		
Diag_Respose_Type	(0,8)	0	8		0x14:Clear fault code response 0x55:Current Fault Code		0	R	T								R	0x14：诊断请求应答 0x55:当前故障码发送 其他：无效值	有诊断请求时，作为应答报文；有新故障出现时立即发送故障码，之后按1s周期广播发送当前故障状态
Diag_Respose_State	(8,8)	8	8		0x01:Operation failse 0x02:Operation succeeds Other:Invalid values		0	R	T								R	只有当Diag_Respose_Type=0x14时，该信号值才有效; 0x01:清除故障信息操作失败; 0x02:清除故障信息操作成	
MotorIGBT_Fault	(9,1)	9	1		0:No Fault 1:Fault		0	R	T								R	Diag_Respose_Type=0x55时: 0:电机IGBT无故障 1:电机IGBT有故障	
Motor/IGBTTemp_High	(10,1)	10	1		0:No Fault 1:Fault		0	R	T								R	Diag_Respose_Type=0x55时: 0:电机/IGBT温度正常 1：电机/IGBT温度偏高	
MotorPhaseCurrent_Overload	(11,1)	11	1		0:No Fault 1:Fault		0	R	T								R	Diag_Respose_Type 0x55时: 0:无故障 1;电机相电流过载	
SpinSignal_Loss	(12,1)	12	1		0:No Fault 1:Fault		0	R	T								R	Diag_Respose_Type=0x55时: 0:无故障 1:旋变信号丢失	
CurrentSensor_Fault	(13,1)	13	1		0:No Fault 1:Fault		0	R	T								R	Diag_Respose_Type=0x55时: 0:无故障 1:电流传感器错误	
SpeedSignal_Loss	(14,1)	14	1		0:No Fault 1:Fault		0	R	T								R	Diag_Respose_Type=0x55时: 0:无故障 1:速度信号丢失	
DriverPhase_Loss	(15,1)	15	1		0:No Fault 1:Fault		0	R	T								R	Diag_Respose_Type=0x55时: 0:无故障 1:驱动缺相	
MotorStall_Fault	(16,1)	16	1		0:No Fault 1:Fault		0	R	T								R	Diag_Respose_Type=0x55时: 0:无故障 1:电机失速	
OverVoltage_Fault	(17,1)	17	1		0:No Fault 1:Fault		0	R	T								R	Diag_Respose_Type=0x55时: 0:无故障 1:过电压	

ID	Transmitter ECU	Period (ms)	Type	Length	Description
0x101	VCU	10	P	64 bits	VCU1

SignalName	Convention	LSB	Length	EventTrans.	Conversion	Invalid	Default /Init	Nodelist										Comment	特别说明
								VCU	MCU	BMS	ABS	EPS	DCDC	BCM	MP5	ICU	OBDII		
DriverRequestTorque	(0,8)	0	8		DataType:Num Range high:100 Range low:0 Conversion:(D)*0.393 Unit:%		0	T	R	R									新版修改了报文发送周期，由原来的20ms修改为10ms周期
VCU_SystemWarning	(24,2)	24	2		0:No Error 1:Level-1 error(High) 2:Level-2 error 3:Level-3 error(Low)		0	T	R	R						R			
Error_DriverRequestTorque	(26,1)	26	1		0:No Error 1:Error		0	T	R	R						R			
DCDCEnable_Cmd	(27,1)	27	1		0:Disable 1:Enable		0	T					R					0:DCDC未使能 1:DCDC使能	由原来的Reserved修改为DCDCEnable_Cmd信号
Reserved	(28,20)	28	20		Reverved		0	T											
GearLeverPos_Sts_F	(39,1)	39	1		0:No Error 1:Error		0	T	R	R				R		R		Indicates whether the GearLeverPos signal_Sts is valid	
GearLeverPos_Sts	(36,3)	36	3		0X00 P 0X01 R 0X02 N 0X03 D 0X04 Reserved 0X05 Reserved 0X06 Reserved 0X07 Reserved		0	T	R	R				R		R		Gear selector position	
BMS_Main_Relay_Cmd	(35,1)	35	1		0:No Work 1:Work		0	T	R		R			R					
Brake_Pedal_Sts	(33,2)	33	2		00:Not Pressed 01:Pressed 10：Reserved 11：error		0	T	R		R			R					
VehicleSts	(32,1)	32	1		0:Not Ready 1:Ready		0	T								R			
PowerRduceReq	(53,3)	53	3		0:Not Request 1:1LevelPowerRduceReq other Reserved		0	T										When BMS soc be left 20% or other 1 level warning happened,1level PowerRduceReq will be send by VCU to Stop AC work.	
Reserved	(40,6)	40	6		Reverved		0	T											
KeyPosition	(46,2)	46	2	No	00:Off 01:ACC 10:ON 11:Start		0	T	R	R/T	R	R		R	R	R			这个信号需要网关转发

Clutch_Pedal_Sts	(52,1)	52	1		0:Not Pressed 1:Pressed		0	T		R								Request BMS Aux relay work or not work	由原来的BMS_Aux_Relay_Cmd 修改为Clutch_Pedal_Sts信号
RollingCounter	(48,4)	48	4		DataType:Num Range high:15 Range low:0 Conversion:(D) Unit:		0	T		R									
CheckSum	(56,8)	56	8		checksum=(byte0+byte1+byte2+byte3+byte4+byte5+byte6)XOR 0xFF		0	T	R	R									

ID	Transmitter ECU	Period (ms)	Type	Length	Description
0x6B0	VCU	Event/1000	PA	64 bits	VCU2故障码广播

SignalName	Convention	LSB	Length	EventTrans.	Conversion	Invalid	Default /Init	Nodelist										Comment	特别说明
								VCU	MCU	BMS	ABS	EPS	DCDC	BCM	MP5	ICU	OBDII		
Diag_Respose_Type	(0,8)	0	8		0x14:Clear fault code response 0x19:Historical fault read response 0x55:Current Fault Code Other:Invalid values		0	T									R	0x14：诊断请求应答 0x19:读取历史故障信息应答 0x55:当前故障码发送 其他：无效值	有诊断请求时，作为应答报文；有新故障出现时立即发送故障码，之后按1s周期广播发送当前故障状态
Diag_Respose_State	(8,8)	8	8		0x01:Operation failse 0x02:Operation succeeds Other:Invalid values		0	T									R	0x01:请求操作失败； 0x02:请求操作成功； 其他值均为无效值	当Diag_Respose_Type=0x14时，应答为清除故障信息应答； 当Diag_Respose_Type=0x19时，应答为读取历史故障信息
VCUInVoltageLow_Fault	(16,1)	16	1		0:No Fault 1:Fault		0	T									R	VCU供电电压低故障： Diag_Respose_Type=0x55时： 0:无故障 1;有故障	该帧为新增加故障诊断报文
VCUWorkVoltage_Fault	(17,1)	17	1		0:No Fault 1:Fault		0	T									R	VCU工作电压不正常：在Diag_Respose_Type=0x55时： 0:无故障 1:有故障	
VCUCAN_Fault	(18,1)	18	1		0:No Fault 1:Fault		0	T									R	VCU CAN通信异常：在Diag_Respose_Type 0x55时： 0:无故障 1:有故障	

VCUAccPedalSignal_Fault	(19,1)	19	1		0:No Fault 1:Fault		0	T									R	VCU加速踏板采集错误：在Diag_Respose_Type=0x55时： 0:无故障 1：有故障	
EvaporatorTempSignal_Fault	(20,1)	20	1		0:No Fault 1:Fault		0	T									R	蒸发器温度采集错误：在Diag_Respose_Type=0x55时： 0:无故障 1：有故障	
WaterPump_Fault	(21,1)	21	1		0:No Fault 1:Fault		0	T									R	水泵诊断故障：在Diag_Respose_Type=0x55时： 0:无故障 1:有故障	
InputSignal1_Fault	(22,1)	22	1		0:No Fault 1:Fault		0	T									R	输入1信号检测故障：在Diag_Respose_Type=0x55时： 0:无故障 1：有故障	
InputSignal2_Fault	(23,1)	23	1		0:No Fault 1:Fault		0	T									R	输入2信号检测故障：在Diag_Respose_Type=0x55时： 0:无故障 1：有故障	
InputSignal3_Fault	(24,1)	24	1		0:No Fault 1:Fault		0	T									R	输入3信号检测故障：在Diag_Respose_Type=0x55时： 0:无故障 1：有故障	
InputSignal4_Fault	(25,1)	25	1		0:No Fault 1:Fault		0	T									R	输入4信号检测故障：在Diag_Respose_Type=0x55时： 0:无故障 1：有故障	
InputSignal5_Fault	(26,1)	26	1		0:No Fault 1:Fault		0	T									R	输入5信号检测故障：在Diag_Respose_Type=0x55时： 0:无故障 1：有故障	
InputSignal6_Fault	(27,1)	27	1		0:No Fault 1:Fault		0	T									R	输入6信号检测故障：在Diag_Respose_Type=0x55时： 0:无故障 1：有故障	

InputSignal7_Fault	(28,1)	28	1		0:No Fault 1:Fault		0	T									R	输入7信号检测故障：在Diag_Respose_Type=0x55时： 0:无故障 1：有故障	
InputSignal8_Fault	(29,1)	29	1		0:No Fault 1:Fault		0	T									R	输入8信号检测故障：在Diag_Respose_Type=0x55时： 0:无故障 1：有故障	
InputSignal9_Fault	(30,1)	30	1		0:No Fault 1:Fault		0	T									R	输入9信号检测故障：在Diag_Respose_Type=0x55时： 0:无故障 1：有故障	
InputSignal10_Fault	(31,1)	31	1		0:No Fault 1:Fault		0	T									R	输入10信号检测故障：在Diag_Respose_Type=0x55时： 0:无故障 1：有故障	
InputSignal11_Fault	(32,1)	32	1		0:No Fault 1:Fault		0	T									R	输入11信号检测故障：在Diag_Respose_Type=0x55时： 0:无故障 1：有故障	
InputSignal12_Fault	(33,1)	33	1		0:No Fault 1:Fault		0	T									R	输入12信号检测故障：在Diag_Respose_Type=0x55时： 0:无故障 1：有故障	
InputSignal13_Fault	(34,1)	34	1		0:No Fault 1:Fault		0	T									R	输入13信号检测故障：在Diag_Respose_Type=0x55时： 0:无故障 1：有故障	
InputSignal14_Fault	(35,1)	35	1		0:No Fault 1:Fault		0	T									R	输入14信号检测故障：在Diag_Respose_Type=0x55时： 0:无故障 1：有故障	
InputSignal15_Fault	(36,1)	36	1		0:No Fault 1:Fault		0	T									R	输入15信号检测故障：在Diag_Respose_Type=0x55时： 0:无故障 1：有故障	

InputSignal16_Fault	(37,1)	37	1		0:No Fault 1:Fault		0	T									R	输入16信号检测故障：在Diag_Respose_Type=0x55时： 0:无故障 1:有故障	
LowSideOutput1_Fault	(38,1)	38	1		0:No Fault 1:Fault		0	T									R	1号低边输出故障：在Diag_Respose_Type=0x55时： 0:无故障 1:有故障	
LowSideOutput2_Fault	(39,1)	39	1		0:No Fault 1:Fault		0	T									R	2号低边输出故障：在Diag_Respose_Type=0x55时： 0:无故障 1:有故障	
LowSideOutput3_Fault	(40,1)	40	1		0:No Fault 1:Fault		0	T									R	3号低边输出故障：在Diag_Respose_Type=0x55时： 0:无故障 1:有故障	
LowSideOutput4_Fault	(41,1)	41	1		0:No Fault 1:Fault		0	T									R	4号低边输出故障：在Diag_Respose_Type=0x55时： 0:无故障 1:有故障	
LowSideOutput5_Fault	(42,1)	42	1		0:No Fault 1:Fault		0	T									R	5号低边输出故障：在Diag_Respose_Type=0x55时： 0:无故障 1:有故障	
LowSideOutput6_Fault	(43,1)	43	1		0:No Fault 1:Fault		0	T									R	6号低边输出故障：在Diag_Respose_Type=0x55时： 0:无故障 1:有故障	
LowSideOutput7_Fault	(44,1)	44	1		0:No Fault 1:Fault		0	T									R	7号低边输出故障：在Diag_Respose_Type=0x55时： 0:无故障 1:有故障	
LowSideOutput8_Fault	(45,1)	45	1		0:No Fault 1:Fault		0	T									R	8号低边输出故障：在Diag_Respose_Type=0x55时： 0:无故障 1:有故障	

HighSideOutput1_Fault	(46,1)	46	1		0:No Fault 1:Fault		0	T									R	1号高边输出故障：在Diag_Respose_Type=0x55时： 0:无故障 1:有故障	
HighSideOutput2_Fault	(47,1)	47	1		0:No Fault 1:Fault		0	T									R	2号高边输出故障： 在Diag_Respose_Type=0x55时： 0:无故障 1:有故障	
HighSideOutput3_Fault	(48,1)	48	1		0:No Fault 1:Fault		0	T									R	3号高边输出故障：在Diag_Respose_Type=0x55时： 0:无故障 1:有故障	
HighSideOutput4_Fault	(49,1)	49	1		0:No Fault 1:Fault		0	T									R	4号高边输出故障：在Diag_Respose_Type=0x55时： 0:无故障 1:有故障	
HighSideOutput5_Fault	(50,1)	50	1		0:No Fault 1:Fault		0	T									R	5号高边输出故障：在Diag_Respose_Type=0x55时： 0:无故障 1:有故障	
HighSideOutput6_Fault	(51,1)	51	1		0:No Fault 1:Fault		0	T									R	6号高边输出故障：在Diag_Respose_Type=0x55时： 0:无故障 1:有故障	
HighSideOutput7_Fault	(52,1)	52	1		0:No Fault 1:Fault		0	T									R	7号高边输出故障：在Diag_Respose_Type=0x55时： 0:无故障 1:有故障	
HighSideOutput8_Fault	(53,1)	53	1		0:No Fault 1:Fault		0	T									R	8号高边输出故障：在Diag_Respose_Type=0x55时： 0:无故障 1:有故障	
Reserved	(54,1)	56	11		Reserved		0												

ID	Transmitter ECU	Period (ms)	Type	Length	Description
0x1A0	BMS	10	P	64 bits	BMS1

SignalName	Convention	LSB	Length	EventTrans.	Conversion	Invalid	Default /Init	Nodelist										Comment	特别说明
								VCU	MCU	BMS	ABS	EPS	DCDC	BCM	MP5	ICU	OBDII		
BMS_Warning_Level	(0,2)	0	2		0:No Error 1:Level-1 error(High) 2:Level-2 error 3:Level-3 error(Low)		0	R		T						R		VCU will ask for DMC reduce 20% power at 3 level BMS warning,Warning lamp will active;VCU will ask for DMC reduce 50% power at 2 level BMS warning,VCU will ask for DMC shutdown power at 1 level BMS warning, warning lamp will flash on ICU.	
Batt_charge_Sts	(2,2)	2	2		0:Not Charge 1:Charging 2:Charger finish 3:Reserved		0	R		T						R			
Negative_Relay_FB	(4,1)	4	1		0:Open 1:Close		0	R		T									
Positive_Relay_FB	(5,1)	5	1		0:Open 1:Close		0	R		T									
BMS_SelfCheck_Sts	(6,2)	6	2		00:No finished 01:Finished 10:Reserved 11:Reserved		0	R		T									由原来的Reserved修改为BMS_SelfCheck_Sts
Batt_SOC_Value	(8,8)	8	8		DataType:Num Range high:100 Range low:0 Conversion:(D)*0.5 Unit:%	0xFF	0	R		T						R			
Batt_SOH_Value	(16,8)	16	8		DataType:Num Range high:100 Range low:0 Conversion:(D)*0.5 Unit:%	0xFF	0	R		T					R				
Reserved	(24,2)	24	2		Reserved		0			T								BMS_Cmd_AC_DC	由原来的BMS_Cmd_AC_DC修改为Reserved
Pre_charge_Relay_FB	(26,1)	26	1		0:Open 1:Close		0	R		T									
Fast_charge_Relay_FB	(27,1)	27	1		0:Open 1:Close		0	R		T									
Pre_charge_Finish_Sts	(28,1)	28	1		0:finish 1:not finish		0	R		T						R			
Pre_charge_Finish_Sts_F	(29,1)	29	1		0:No Error 1:error		0	R		T						R			

BMS_Req_Mode	(30,2)	30	2		0:Standy Mode 1:Power On Mode 2:Power Off Mode 3:Reserved		0	R		T									
Reserved	(31,1)	31	1		Reserved		0			T									
BMS_Allow_Max_Discharge	(40,13)	40	13		DataType:Num Range high:800 Range low:-500 Conversion:(D)*0.1 Offset:-500 Unit:A	0x1FFF	0X1388	R		T									
Ins_Res_Value_Level	(38,2)	38	2		00:Normal 01:Not Normal(Low) 10:Not Normal(High) 11:Reserved		0			T									由原来的Reserved修改为Ins_Res_Value_Level
Reserved	(52,4)	52	4		Reserved		0	0		T									
RollingCounter	(48,4)	48	4		DataType:Num Range high:15 Range low:0 Conversion:(D) Unit:		0	R		T									
CheckSum	(56,8)	56	8		DataType:Num Range high:0xFF Range low:0 Conversion: Unit:			R		T								checksum=(byte0+byte1+byte2+byte3+byte4+byte5+byte6)XOR 0xFF	

ID	Transmitter ECU	Period (ms)	Type	Length	Description
0x1A1	BMS	10	P	64 bits	BMS2

SignalName	Convention	LSB	Length	EventTrans.	Conversion	Invalid	Default /Init	Nodelist										Comment	特别说明
								VCU	MCU	BMS	ABS	EPS	DCDC	BCM	MP5	ICU	OBDII		
Batt_Volt_Value	(11,13)	11	13		DataType:Num Range high:500 Range low:0 Conversion:(D)*0.1 Unit:V	0x1FFF	0	R		T						R		The signal represents the battery voltage value.	新版协议修改了报文发送周期，由原来的20ms周期修改为10ms周期。
Reserved	(8,3)	8	3		Reserved		0			T									
Batt_Curr_Value	(24,16)	24	16		DataType:Num Range high:800 Range low:-500 Conversion:(D)*0.1 OffSet:-500 Unit:A	0xFFFF	0x1388	R		T						R		The signal represents the battery current value.	
Reserved	(37,3)	37	3		Reserved		0			T									

BMS_Cell_Max_Volt	(40,13)	40	13		DataType:Num Range high:6.553 Range low:0 Conversion:(D)*0.001 OffSet:0 Unit:V	0x1FFF	0	R		T									
Reserved	(52,4)	52	4		Reserved		0			T									
MessageCounter	(48,4)	48	4		DataType:Num Range high:15 Range low:0 Conversion:(D) Unit:		0	R		T									
CheckSum	(56,8)	56	8		DataType:Num Range high:0xFF Range low:0 Conversion: Unit:			R		T								checksum=(byte0+byte1+byte2+byte3+byte4+byte5+byte6)XOR 0xFF	

ID	Transmitter ECU	Period (ms)	Type	Length	Description
0x1A2	BMS	100	P	64 bits	BMS3

SignalName	Convention	LSB	Length	EventTrans.	Conversion	Invalid	fault/In	Nodelist										Comment	特别说明
								VCU	MCU	BMS	ABS	EPS	DCDC	BCM	MP5	ICU	OBDII		
CAN_BMS_MAX_CHR_V	(0,16)	0	16		DataType:Num Range high:6553.4V Range low:0 Conversion:(D)*0.1 Offset:0 Unit:V			R		T								最大允许充电电压	该帧为新增报文
CAN_BMS_MAX_CHR_C	(16,32)	16	16		DataType:Num Range high:6553.4A Range low:0 Conversion:(D)*0.1 Offset:0 Unit:A			R		T								最大允许充电电流	
CAN_BMS_CTL_CHR	(32,1)	32	1		0:AC_DC Active 1:BMS protect AC_DC Inactive		1	R		T								0:充电机开启充电 1:电池保护，充电器关闭输出	
Reserved	(33,7)	33	7		Reserved		0			T									
Reserved	(56,24)	56	24		Reserved		0			T									

ID	Transmitter ECU	Period (ms)	Type	Length	Description
0x371	BMS	200	P	64 bits	BMS 转发CCS报文

SignalName	Convention	LSB	Length	EventTrans.	Conversion	Invalid	fault/In	Nodelist										Comment	特别说明
								VCU	MCU	BMS	ABS	EPS	DCDC	BCM	MP5	ICU	OBDII		
CAN_CCS_CHR_V	(8, 16)	8	16		DataType:Num Range high:6553.4V Range low:0 Conversion:(D)*0.1 Unit:V			R		T								充电机输出电压	该帧为新增报文，由BMS从CAN2网络收到的CCS相同ID报文。并转发到CAN1网络
CAN_CCS_CHR_A	(24,32)	24	16		DataType:Num Range high:6553.4A Range low:0 Conversion:(D)*0.1 Unit:A			R		T								充电机输出电流	
CCS_hardware_Sts	(32,1)	32	1		0:Normal 1:abnormal			R		T								0:正常 1:硬件故障	
CCS_Motor_Temp	(33,1)	33	1		0:Normal 1:high temperature			R		T								0:正常 1:充电机温度过高保护	
CCS_Volt_Input_Sts	(34,1)	34	1		0:Normal 1:abnormal			R		T								0:输入电压正常 1:输入电压错误，充电机停止工作	
CCS_Start_Sts	(35,1)	35	1		0:Normal 1:abnormal			R		T								0:电池电压正常，可以启动 1:电池电压异常，不允许启动（用于防止电池反接）	
AC_DC_comm_Sts	(36,1)	36	1		0:Normal 1:abnormal			R		T								0:通信正常 1:通信指令超市or收到指令异常	
CCS_Output_Sts	(37,1)	37	1		0:Normal 1:abnormal			R		T								0:正常 1:输出过流、短路，充电机停止工作	
Reserved	(56,26)	56	26		Reserved		0			T									

ID	Transmitter ECU	Period (ms)	Type	Length	Description
0x6C0	BMS	Event/1000	PA	64 bits	BMS4故障码广播

SignalName	Convention	LSB	Length	EventTrans.	Conversion	Invalid	Default/Init	Nodelist										Comment	特别说明
								VCU	MCU	BMS	ABS	EPS	DCDC	BCM	MP5	ICU	OBDII		
Diag_Respose_Type	(0,8)	0	8		0x14:Clear fault code response 0x55:Current Fault Code Other:Invalid values		0	R		T							R	0x14：诊断请求应答 0x55:当前故障码发送 其他：无效值	有诊断请求时，作为应答报文；有新故障出现时立即发送故障码，之后按1s周期广播发送当前故障状态
Diag_Respose_State	(8,8)	8	8		0x01:Operation failse 0x02:Operation succeeds Other:Invalid values		0	R		T							R	0x01:清除故障信息操作失败； 0x02:清除故障信息操作成功； 其他值均为无效值	只有当Diag_Respose_Type=0x14时，该信号值才有效
PowerBatteryHigh1_Fault	（16,1）	16	1		0:No Fault 1:Fault		0	R		T							R	Diag_Respose_Type=0x55时： 0:无故障 1:总电压过高1	
PowerBatteryHigh2_Fault	（17,1）	17	1		0:No Fault 1:Fault		0	R		T							R	Diag_Respose_Type=0x55时： 0:无故障 1:有故障总电压过高2	
PowerBatteryHigh3_Fault	（18,1）	18	1		0:No Fault 1:Fault		0	R		T							R	Diag_Respose_Type=0x55时： 0:无故障 1:总电压过高3	
PowerBatteryLow1_Fault	（19,1）	19	1		0:No Fault 1:Fault		0	R		T							R	Diag_Respose_Type=0x55时： 0:无故障 1:总电压过低1	
PowerBatteryLow2_Fault	（20,1）	20	1		0:No Fault 1:Fault		0	R		T							R	Diag_Respose_Type=0x55时： 0:无故障 1:总电压过低2	
PowerBatteryLow3_Fault	（21,1）	21	1		0:No Fault 1:Fault		0	R		T							R	Diag_Respose_Type=0x55时： 0:无故障 1:总电压过低3	
SOCLow_Fault	（22,1）	22	1		0:No Fault 1:Fault		0	R		T							R	Diag_Respose_Type=0x55时： 0:无故障 1:SOC过低	

DischargeCurrentBig1_Fault	（23,1）	23	1		0:No Fault 1:Fault		0	R		T							R	Diag_Respose_Type=0x55时： 0:无故障 1:放电电流过大1	
DischargeCurrentBig2_Fault	（24,1）	24	1		0:No Fault 1:Fault		0	R		T							R	Diag_Respose_Type=0x55时： 0:无故障 1:放电电流过大2	
ChargeCurrentBig1_Fault	（25,1）	25	1		0:No Fault 1:Fault		0	R		T							R	Diag_Respose_Type=0x55时： 0:无故障 1:充电电流过大1	
ChargeCurrentBig1_Fault	（26,1）	26	1		0:No Fault 1:Fault		0	R		T							R	Diag_Respose_Type=0x55时： 0:无故障 1:充电电流过大2	
BatCellVolHigh1_Fault	（27,1）	27	1		0:No Fault 1:Fault		0	R		T							R	Diag_Respose_Type=0x55时： 0:无故障 1:单体电压过高1	该帧为新增故障广播报文
BatCellVolHigh2_Fault	（28,1）	28	1		0:No Fault 1:Fault		0	R		T							R	Diag_Respose_Type=0x55时： 0:无故障 1:单体电压过高2	
BatCellVolHigh3_Fault	（29,1）	29	1		0:No Fault 1:Fault		0	R		T							R	Diag_Respose_Type=0x55时： 0:无故障 1:单体电压过高3	
BatCellVolLow1_Fault	（30,1）	30	1		0:No Fault 1:Fault		0	R		T							R	Diag_Respose_Type=0x55时： 0:无故障 1:单体电压过低1	
BatCellVolLow2_Fault	（31,1）	31	1		0:No Fault 1:Fault		0	R		T							R	Diag_Respose_Type=0x55时： 0:无故障 1:单体电压过低2	
ellDisCharCurrentHigh1_Faul	（32,1）	32	1		0:No Fault 1:Fault		0	R		T							R	Diag_Respose_Type=0x55时： 0:无故障 1:单体放电电流过大1	

ellDisCharCurrentHigh2_Faul	(33,1)	33	1		0:No Fault 1:Fault		0	R		T							R	Diag_Respose_Type=0x55 时: 0:无故障 1:单体放电电流过大2	
CellCharCurrentHigh1_Fault	(34,1)	34	1		0:No Fault 1:Fault		0	R		T							R	Diag_Respose_Type=0x55 时: 0:无故障 1:单体充电电流过大1	
ellDiCharCurrentHigh2_Faul	(35,1)	35	1		0:No Fault 1:Fault		0	R		T							R	Diag_Respose_Type=0x55 时: 0:无故障 1:单体充电电流过大2	
CellVolHigh1_Fault	(36,1)	36	1		0:No Fault 1:Fault		0	R		T							R	Diag_Respose_Type=0x55 时: 0:无故障 1:单体电压过高1	
CellVolHigh2_Fault	(37,1)	37	1		0:No Fault 1:Fault		0	R		T							R	Diag_Respose_Type=0x55 时: 0:无故障 1:单体电压过高2	
CellVolHigh3_Fault	(38,1)	38	1		0:No Fault 1:Fault		0	R		T							R	Diag_Respose_Type=0x55 时: 0:无故障 1:单体电压过高3	
Reserved	(56,1)	56	25		Reserved		0			T									

ID	Transmitter ECU	Period (ms)	Type	Length	Description
0x6C7	BMS	Event/1000	PA	64 bits	BMS转CCS故障码广播

SignalName	Convention	LSB	Length	EventTrans.	Conversion	Invalid	fault/In	Nodelist										Comment	特别说明
								VCU	MCU	BMS	ABS	EPS	DCDC	BCM	MP5	ICU	OBDII		
Diag_Respose_Type	(0,8)	0	8		0x14:Clear fault code response 0x55:Current Fault Code Other:Invalid values		0	R		T							R	0x14：诊断请求应答 0x55:当前故障码发送 其他：无效值	有诊断请求时，作为应答报文；有新故障出现时立即发送故障码，之后按1s周期广播发送当前故障状态
Diag_Respose_State	(8,8)	8	8		0x01:Operation failse 0x02:Operation succeeds Other:Invalid values		0	R		T							R	0x01:清除故障信息操作失败； 0x02:清除故障信息操作成功； 其他值均为无效值	只有当Diag_Respose_Type=0x14时，该信号值才有效
OverTemp_Fault	(9,2)	9	2		0x00:No Fault 0x01:FaultLeve11 0x10:FaultLevel2 0x11:Invalid		0	R		T							R	Diag_Respose_Type=0x55时： 0x00:无故障 0x01:过温一级故障 0x10：过温二级故障 0x11:无效值	该报文为新增故障管理报文
InputVoltLow_Fult	(11,1)	11	1		0:No Fault 1:Fault		0	R		T							R	Diag_Respose_Type 0x55时： 0:无故障 1;输入电压欠压故障	
InputVoltHigh_Fault	(12,1)	12	1		0:No Fault 1:Fault		0	R		T							R	Diag_Respose_Type=0x55时： 0:无故障 1:输入电压过压故障	
OutputPowerVoltLow_Fault	(13,1)	13	1		0:No Fault 1:Fault		0	R		T							R	Diag_Respose_Type=0x55时： 0:无故障 1;高压输出欠压故障	
OutputPowerVoltHigh_Fault	(14,1)	14	1		0:No Fault 1:Fault		0	R		T							R	Diag_Respose_Type=0x55时： 0:无故障 1:有故障高压输出过压故障	
CANCommunication_Fault	(15,1)	15	1		0:No Fault 1:Fault		0	R		T							R	Diag_Respose_Type=0x55时： 0:无故障 1:通讯超时、电压指令超限	

CCSRestart_Fault	(16,1)	16	1		0:No Fault 1:Fault		0	R		T							R	Diag_Respose_Type=0x55 时： 0:无故障 1:启动失败
CCSBattery_Fault	(17,1)	17	1		0:No Fault 1:Fault		0	R		T							R	Diag_Respose_Type=0x55 时： 0:无故障 1:电池故障
Reserved	(56,48)	56	39		Reserved		0	R		T							R	

ID	Transmitter ECU	Period (ms)	Type	Length	Description
0x6A1	OBDII	Event	Event	64 bits	诊断设备

SignalName	Convention	LSB	Length	EventTrans.	Conversion	Invalid	Default/ Init	Nodelist										Comment	特别说明
								VCU	MCU	BMS	ABS	EPS	DCDC	BCM	MP5	ICU	OBDII		
Reserved	(0, 8)	0	8				0x55		R	R							T		该报文为新增报文
OBD_CL_ALL_DTC	(8,1)	8	1		0: Normal 1: Clear All DTC		0	R	R	R							T	0:无请求 1;请求清除所有故障信息	
OBD_CL_VCU_DTC	(9,1)	9	1		0:Normal 1:Clear VCU DTC		0	R									T	0:无请求 1;请求清除VCU故障信息	
OBD_CL_MCU_DTC	(10,1)	10	1		0:Normal 1:Clear MCU DTC		0		R								T	0:无请求 1;请求清除MCU故障信息	
OBD_CL_BMS_DTC	(11,1)	11	1		0:Normal 1:Clear BMS DTC		0			R							T	0:无请求 1;请求清除BMS故障信息	
OBD_CL_CCS_DTC	(12,1)	12	1		0:Normal 1:Clear CCS DTC		0			R							T	0:无请求 1;请求清除CCS故障信息	
OBD_Re_VCU_HisDTC	(13,1)	13	1		0:Normal 1:Read Historical DTC		0	R									T	0:无请求 1;请求读取VCU历史故障信息	
Reserved	(56,50)	56	50		Reserved		0										T		

ID	ransmitterEC	Period (ms)	Type	Length	Description
0x324	DC/DC	20	P	64	

SignalName	Convention	LSB	Length	EventTrans.	Conversion	Invalid	Default/ Init	Nodelist										Comment	特别说明
								VCU	MCU	BMS	ABS	EPS	DCDC	BCM	MP5	ICU	OBDII		
ShortCircuit_Fault	(0,1)	0	1		0:No Fault 1:Fault		0	R		R			T				R	0:无故障 1:短路故障	
OverLoad_Fault	(1,1)	1	1		0:No Fault 1:Fault		0	R		R			T				R	0:无故障 1:过载故障	
TempHigh_Warning	(2,1)	2	1		0:Normal 1:Warning		0	R		R			T				R	0:正常 1:温度报警	
Reserved	(56,61)	56	61				0												