中国汽车工程研究院股份有限公司
China Automotive Engineering Research Institute Co., Ltd.

Version Management

Revision	Date	Editor	Reviewed by	Approved by	Section	Changes Comments
1	2015/6/30	YangLiangYi			All	Initial revision

声明：本材料涉及内容仅用于项目内部使用，未经授权不可复制

Legend - CAN
参数说明 - CAN

<table>
<tr><th>Property
属性</th><th>Description
描述</th><th>Remarks
备注</th></tr>
<tr><td>ECU (Tx)
发送ECU</td><td>ECU name that sends the described message and signal
发送相应报文和信号的ECU名称</td><td></td></tr>
<tr><td>Msg Name
报文名称</td><td>Message name
报文名称</td><td>eg. BCM_1 - BCM transfers message
举例：BCM_1为节点BCM发送的报文</td></tr>
<tr><td>MsgID
报文标识符</td><td>Message identifier
报文标识符</td><td></td></tr>
<tr><td>Msg Length (bytes)
报文长度</td><td>Byte length of the message
报文的字节长度</td><td></td></tr>
<tr><td>Msg Send Type
报文发送类型</td><td>Send type for the message.
报文的发送类型
Send type:"Periodic", "Event", "IfActive", "POE" and "PA"
发送类型："Periodic", "Event", "IfActive", "POE" and "PA"</td><td>“ POE - Period On Event ” , " PA - Period if Active "</td></tr>
<tr><td>Message Cycle Time (ms)
报文周期时间（ms）</td><td>Cycle time of the message if it should be sent cyclically
报文发送周期时间（仅对周期性发送报文）</td><td>Unit: ms
单位：毫秒</td></tr>
<tr><td>Start Byte Position/Start Bit Position
起始字节位置/起始位位置</td><td>Mapped start position of the signal by "Motorola forward LSB" format.
It indicates the lsb (least significant bit) of LSB (least significant byte) from beginning of the message. (See the figure on the right).
Bitwise to the left, bytewise to the up (from</td><td>
<table>
<tr><th></th><th>Bit7</th><th>Bit6</th><th>Bit5</th><th>Bit4</th><th>Bit3</th><th>Bit2</th><th>Bit1</th><th>Bit0</th></tr>
<tr><td>Byte 0</td><td>7</td><td>6</td><td>5</td><td>4</td><td>3</td><td>2</td><td>1</td><td>0</td></tr>
<tr><td>Byte 1</td><td>15</td><td>14</td><td>13</td><td>12</td><td>11</td><td>10</td><td>9</td><td>8</td></tr>
<tr><td>Byte 2</td><td>23</td><td>22</td><td>21</td><td>20</td><td>19</td><td>18</td><td>17</td><td>16</td></tr>
<tr><td>Byte 3</td><td>31</td><td>30</td><td>29</td><td>28</td><td>27</td><td>26</td><td>25</td><td>24</td></tr>
<tr><td>Byte 4</td><td>39</td><td>38</td><td>37</td><td>36</td><td>35</td><td>34</td><td>33</td><td>32</td></tr>
<tr><td>Byte 5</td><td>47</td><td>46</td><td>45</td><td>44</td><td>43</td><td>42</td><td>41</td><td>40</td></tr>
<tr><td>Byte 6</td><td>55</td><td>54</td><td>53</td><td>52</td><td>51</td><td>50</td><td>49</td><td>48</td></tr>
<tr><td>Byte 7</td><td>63</td><td>62</td><td>61</td><td>60</td><td>59</td><td>58</td><td>57</td><td>56</td></tr>
</table>
<table>
<tr><th>Byte</th><th>Bit7</th><th>Bit6</th><th>Bit5</th><th>Bit4</th><th>Bit3</th><th>Bit2</th><th>Bit1</th><th>Bit0</th></tr>
<tr><td>Byte 0</td><td></td><td></td><td></td><td></td><td>msb</td><td>----</td><td>----</td><td>----</td></tr>
<tr><td>Byte 1</td><td><---</td><td>----</td><td>----</td><td>----</td><td>----</td><td>----</td><td>----</td><td>lsb</td></tr>
<tr><td>Byte 2</td><td></td><td></td><td></td><td></td><td></td><td></td><td></td><td></td></tr>
<tr><td>Byte 3</td><td></td><td></td><td></td><td></td><td></td><td></td><td></td><td></td></tr>
</table>
</td></tr>
</table>

Signal Length **信号长度**	Bit length of the signal 信号的位长度	
Signal Name (Label) **信号名称（名称）**	Signal Name 信号名称	
Signal Comment **信号描述**	Comment for the signal 信号描述	
Invalid Value (hex) **无效值（十六进制）**	Invalid value in hex value 十六进制表述的无效值	
Signal Value Description **信号值描述**	Hex-physics representation of the signal value	
Receiving ECUs **接收ECUs**	It indicates which ECUs receive the signals. If "R" is marked, the ECU receives the signal. 指示了信号被哪些ECU接收。如果标为“R”，该ECU接收此信号。	One column for each ECU - e.g. BCM, ICM, … 每列代表一个ECU，如BCM，ICM等。
Receiving ECUs ***接收ECUs***	It indicates which ECUs receive the signals. If "x" is marked, the ECU receives the signal. 指示了信号被哪些ECU接收。如果标为“x”，该ECU接收此信号。	One column for each ECU - e.g. BCM, ICM, … 每列代表一个ECU，如BCM，ICM等。
Gatewayed Signals **网关转发信号**	It indicates whether the gateway need transmit this signal. If "R/T" is marked, thegateway need transmit the signal. 指示了信号是否需要网关转发。如果标为“R/T”，网关需要转发此信号。	Yes or No 是或否
Remark **特别说明**	-	

CAN2报文列表

发送ECU	Msg.Name	Msg.ID (hex)	Msg.Length (bytes)	Msg Send Type	Msg.Cycle Time (ms)	Busload at 500kbps (tbit:ms)
BMS	VCU	0x101	8	Periodic	10	2.612%
	BMS3	0x1A2	8	Periodic	100	0.261%
	OBDII	0x6A1	8	Event	0	0.000%
CCS	CCS1	0x371	8	Periodic	200	0.131%
	CCS2	0x6C7	8	PA	1000	0.026%
	总负载率					3.004%

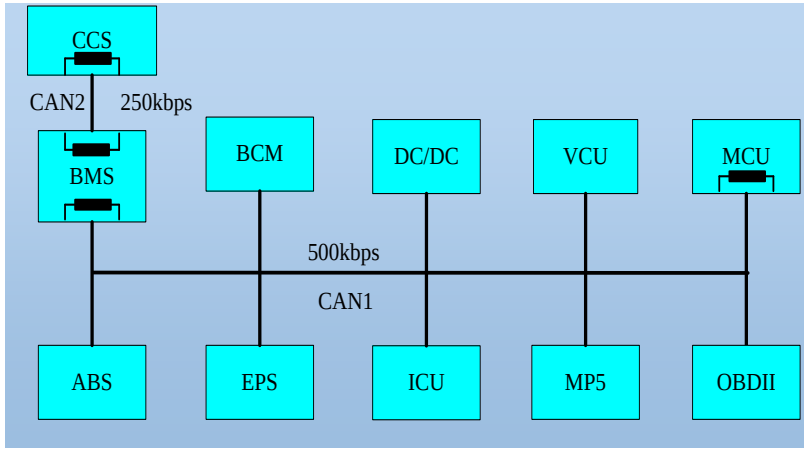

注：CAN2网络，CCS、BMS增加120Ω 终端电阻

HA31 CAN通讯协议（CAN2） 20150630

ID	Transmitter	Period (ms)	Type	Length	Description
0x371	充电机	200	P	64 bits	CCS

SignalName	Convention	LSB	Length	EventTrans.	Conversion	Invalid	Default/Init				Comment	特别说明
								BMS	CCS			
CAN_CCS_CHR_V	(8，16)	8	16		DataType:Num Range high:6553.4V Range low:0 Conversion:(D)*0.1 Unit:V		0	R/T	T		充电机输出电压	
CAN_CCS_CHR_A	(24,16)	24	16		DataType:Num Range high:6553.4A Range low:0 Conversion:(D)*0.1 Unit:A		0	R/T	T		充电机输出电流	
CCS_hardware_Sts	（32,1）	32	1		0:Normal 1:abnormal		0	R/T	T		0:正常 1:硬件故障	
CCS_Motor_Temp	（33,1）	33	1		0:Normal 1:high temperature		0	R/T	T		0:正常 1:充电机温度过高保护	
CCS_Volt_Input_Sts	(34,1)	34	1		0:Normal 1:abnormal		0	R/T	T		0:输入电压正常 1:输入电压错误，充电机停止工作	
CCS_Start_Sts	（35,1）	35	1		0:Normal 1:abnormal		0	R/T	T		0:电池电压正常，可以启动 1:电池电压异常，不允许启动（用于防止电池反接）	
AC_DC_comm_Sts	（36,1）	36	1		0:Normal 1:abnormal		0	R/T	T		0:通信正常 1:通信指令超市or收到指令异常	
CCS_Output_Sts	（37,1）	37	1		0:Normal 1:abnormal		0	R/T	T		0:正常 1:输出过流、短路，充电机停止工作	
Reserved	(56,26)	56	26		Reserved		0	R/T	T			

ID	Transmitter	Period (ms)	Type	Length	Description
0x6C7	CCS	Event/1000	PA		CCS故障广播

SignalName	Convention	LSB	Length	EventTrans.	Conversion	Invalid	Default/Init	BMS	CCS		Comment	特别说明
Diag_Respose_Type	(0,8)	0	8		0x14:Clear fault code response 0x55:Current Fault Code Other:Invalid values		0	R/T	T		0x14：诊断请求应答 0x55:当前故障码发送 其他：无效值	有诊断请求时，作为应答报文；有新故障出现时立即发送故障码，之后按1s周期广播发送当前故障状态
Diag_Respose_State	(8,8)	8	8		0x01:Operation failse 0x02:Operation succeeds Other:Invalid values		0	R/T	T		0x01:清除故障信息操作失败； 0x02:清除故障信息操作成功； 其他值均为无效值	只有当Diag_Respose_Type=0x14时，该信号值才有效
OverTemp_Fault	(9,2)	9	2		0x00:No Fault 0x01:FaultLeve11 0x10:FaultLeve12 0x11:Invalid		0	R/T	T		Diag_Respose_Type=0x55时： 0x00:无故障 0x01:过温一级故障 0x10：过温二级故障 0x11:无效值	
InputVoltLow_Fult	(11,1)	11	1		0:No Fault 1:Fault		0	R/T	T		Diag_Respose_Type 0x55时： 0:无故障 1;输入电压欠压故障	
InputVoltHigh_Fault	(12,1)	12	1		0:No Fault 1:Fault		0	R/T	T		Diag_Respose_Type=0x55时： 0:无故障 1:输入电压过压故障	
OutputPowerVoltLow_Fault	(13,1)	13	1		0:No Fault 1:Fault		0	R/T	T		Diag_Respose_Type=0x55时： 0:无故障 1;高压输出欠压故障	
OutputPowerVoltHigh_Faul	(14,1)	14	1		0:No Fault 1:Fault		0	R/T	T		Diag_Respose_Type=0x55时： 0:无故障 1:有故障高压输出过压故障	
CANCom_Fault	(15,1)	15	1		0:No Fault 1:Fault		0	R/T	T		Diag_Respose_Type=0x55时： 0:无故障 1:通讯超时、电压指令超限	

CCSRestart_Fault	(16,1)	16	1		0:No Fault 1:Fault		0	R/T	T		Diag_Respose_Type=0x55时： 0:无故障 1:启动失败	
CCSBattery_Fault	(17,1)	17	1		0:No Fault 1:Fault		0	R/T	T		Diag_Respose_Type=0x55时： 0:无故障 1:电池故障	
Reserved	(56,39)	56	39		Reserved		0	R/T	T			

ID	Transmitter	Period (ms)	Type	Length	Description
0x101	BMS	10	P	64 bits	BMS转发VCU报文

SignalName	Convention	LSB	Length	EventTrans.	Conversion	Invalid	Default/Init				Comment	特别说明
								BMS	CCS			
DriverRequestTorque	(0,8)	0	8		DataType:Num Range high:100 Range low:0 Conversion:(D)*0.393 Unit:%		0	T				
VCU_SystemWarning	(24,2)	24	2		0:No Error 1:Level-1 error(High) 2:Level-2 error 3:Level-3 error(Low)		0	T				
Error_DriverRequestTorqu	(26,1)	26	1		0:No Error 1:Error		0	T				
DCDCEnable_Cmd	(27,1)	27	1		0:Disable 1:Enable		0	T			0:DCDC未使能 1:DCDC使能	
Reserved	(28,20)	28	20		Reverved		0	T				
GearLeverPos_Sts_F	(39,1)	39	1		0:No Error 1:Error		0	T			Indicates whether the GearLeverPos signal_Sts is valid	
GearLeverPos_Sts	(36,3)	36	3		0X00 P 0X01 R 0X02 N 0X03 D 0X04 Reserved 0X05 Reserved 0X06 Reserved 0X07 Reserved		0	T			Gear selector position	
BMS_Main_Relay_Cmd	(35,1)	35	1		0:No Work 1:Work		0	T				
Brake_Pedal_Sts	(33,2)	33	2		00:Not Pressed 01:Pressed 10：Reserved 11：error		0	T				

VehicleSts	(32,1)	32	1		0:Not Ready 1:Ready		0	T				
PowerRduceReq	(53,3)	53	3		0:Not Request 1:1LevelPowerRduceReq other Reserved		0	T			When BMS soc be left 20% or other 1 level warning happened,1level PowerRduceReq will be send by VCU to Stop AC work.	
Reserved	(40,6)	40	6		Reverved		0	T				
KeyPosition	(46,2)	46	2	No	00:Off 01:ACC 10:ON 11:Start		0	T	R			
Clutch_Pedal_Sts	(52,1)	52	1		0:Not Pressed 1:Pressed		0	T			Request BMS Aux relay work or not work	
RollingCounter	(48,4)	48	4		DataType:Num Range high:15 Range low:0 Conversion:(D) Unit:		0	T				
CheckSum	(56,8)	56	8		checksum=(byte0+byte1+byte2+byte3+byte4+byte5+byte6)XOR 0xFF		0	T	R			

ID	Transmitter	Period (ms)	Type	Length	Description
0x1A2	BMS	100	P	64 bits	BMS3

SignalName	Convention	LSB	Length	EventTrans.	Conversion	Invalid	Default/Init	BMS	CCS		Comment	特别说明
CAN_BMS_MAX_CHR_V	(0,16)	0	16		DataType:Num Range high:6553.4V Range low:0 Conversion:(D)*0.1 Offset:0 Unit:V			T	R		最大允许充电电压	
CAN_BMS_MAX_CHR_C	(16,32)	16	16		DataType:Num Range high:6553.4A Range low:0 Conversion:(D)*0.1 Offset:0 Unit:A			T	R		最大允许充电电流	
CAN_BMS_CTL_CHR	(32,1)	32	1		0:AC_DC Active 1:BMS protect AC_DC Inactive		1	T	R		0:充电机开启充电 1:电池保护，充电器关闭输出	
Reserved	(33,7)	33	7		Reserved		0					
Reserved	(56,24)	56	24		Reserved		0					

ID	Transmitter	Period (ms)	Type	Length	Description
0x6A1	BMS	Event	Event	64 bits	诊断设备

SignalName	Convention	LSB	Length	EventTrans.	Conversion	Invalid	Default/Init				Comment	特别说明
								BMS	CCS			
Reserved	(0, 8)	0	8				0x55	T	R			
OBD_CL_ALL_DTC	(8,1)	8	1		0：Normal 1：Clear All DTC		0	T	R		0:无请求 1;请求清除所有故障信息	
OBD_CL_VCU_DTC	（9,1）	9	1		0:Normal 1:Clear VCU DTC		0	T			0:无请求 1;请求清除VCU故障信息	
OBD_CL_MCU_DTC	（10,1）	10	1		0:Normal 1:Clear MCU DTC		0	T			0:无请求 1;请求清除MCU故障信息	
OBD_CL_BMS_DTC	(11,1)	11	1		0:Normal 1:Clear BMS DTC		0	T			0:无请求 1;请求清除BMS故障信息	
OBD_CL_CCS_DTC	（12,1）	12	1		0:Normal 1:Clear CCS DTC		0	T	R		0:无请求 1;请求清除CCS故障信息	
OBD_Re_VCU_HisDTC	（13,1）	13	1		0:Normal 1:Read Historical DTC		0	T			0:无请求 1;请求读取VCU历史故障信息	
Reserved	(56,26)	56	50		Reserved		0					