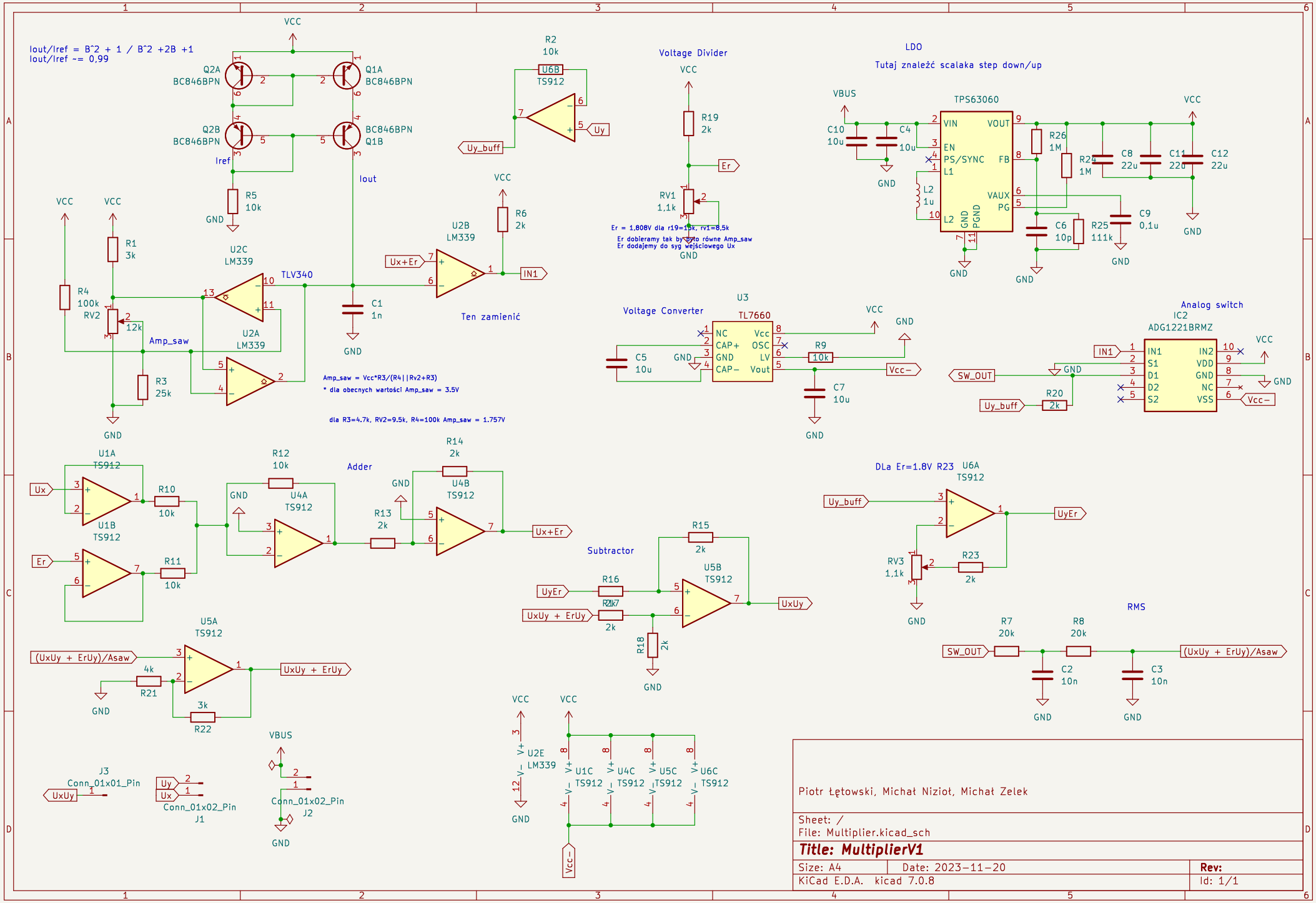
Iout/Iref = B^2 + 1 / B^2 +2B +1
Iout/Iref ~= 0,99
Q2A BC846BPN
Q1A BC846BPN
Q2B BC846BPN
BC846BPN Q1B
Iref
Iout
R5 10k
R2 10k
U6B TS912
Uy_buff
Uy
Voltage Divider
R19 2k
Er
RV1 1,1k
Er = 1,808V dla r19=15k, rv1=8,5k
Er dobieramy tak by było równe Amp_saw
Er dodajemy do syg wejściowego Ux
LDO
Tutaj znaleźć scalaka step down/up
VBUS
TPS63060
VIN
VOUT
EN
PS/SYNC
FB
L1
VAUX
PG
L2
GND
PGND
C10 10u
C4 10u
L2 1u
R26 1M
R24 1M
C8 22u
C11 22u
C12 22u
C6 10p
R25 111k
C9 0,1u
R1 3k
R4 100k
RV2 12k
R3 25k
U2C LM339
U2A LM339
TLV340
Amp_saw
C1 1n
U2B LM339
R6 2k
Ux+Er
IN1
Ten zamienić
Amp_saw = Vcc*R3/(R4||Rv2+R3)
* dla obecnych wartości Amp_saw = 3.5V
dla R3=4.7k, RV2=9.5k, R4=100k Amp_saw = 1.757V
U3
Voltage Converter
TL7660
NC
CAP+
GND
CAP−
Vcc
OSC
LV
Vout
C5 10u
R9 10k
C7 10u
Vcc−
Analog switch
IC2
ADG1221BRMZ
IN1
S1
D1
D2
S2
IN2
VDD
NC
VSS
SW_OUT
R20 2k
U1A TS912
U1B TS912
Ux
Er
R10 10k
R11 10k
R12 10k
U4A TS912
Adder
R13 2k
R14 2k
U4B TS912
Ux+Er
DLa Er=1.8V R23
U6A TS912
UyEr
RV3 1,1k
R23 2k
Subtractor
R15 2k
R16 2k
R17 2k
R18 2k
U5B TS912
UxUy
UxUy + ErUy
U5A TS912
(UxUy + ErUy)/Asaw
R21 4k
R22 3k
RMS
R7 20k
R8 20k
C2 10n
C3 10n
J3 Conn_01x01_Pin
UxUy
J1 Conn_01x02_Pin
Uy
Ux
J2 Conn_01x02_Pin
U2E LM339
U1C TS912
U4C TS912
U5C TS912
U6C TS912
Piotr Łętowski, Michał Nizioł, Michał Zelek
Sheet: /
File: Multiplier.kicad_sch
Title: MultiplierV1
Size: A4
Date: 2023-11-20
Rev:
KiCad E.D.A. kicad 7.0.8
Id: 1/1